MINNESOTA DEPARTMENT OF TRANSPORTATION

CONSTRUCTION PLAN FOR GRADING, BITUMINOUS SURFACING, AND BUILDING RELOCATION AT THE MNDOT TRUCKSTATION SITE.

LOCATED ON T.H. 13 APPROX. 1.4 MILES SOUTH OF T.H. 14

STATE PROJ. NO. 8101-46
GROSS LENGTH ..... FEET ..... MILES
BRIDGES-LENGTH ..... FEET ..... MILES
EXCEPTIONS-LENGTH ..... FEET ..... MILES
NET LENGTH ..... FEET ..... MILES
REF. POINT 30.5 TO REF. POINT .....

STATE PROJ. NO. .....
GROSS LENGTH ..... FEET ..... MILES
BRIDGES-LENGTH ..... FEET ..... MILES
EXCEPTIONS-LENGTH ..... FEET ..... MILES
NET LENGTH ..... FEET ..... MILES
REF. POINT ..... TO REF. POINT .....

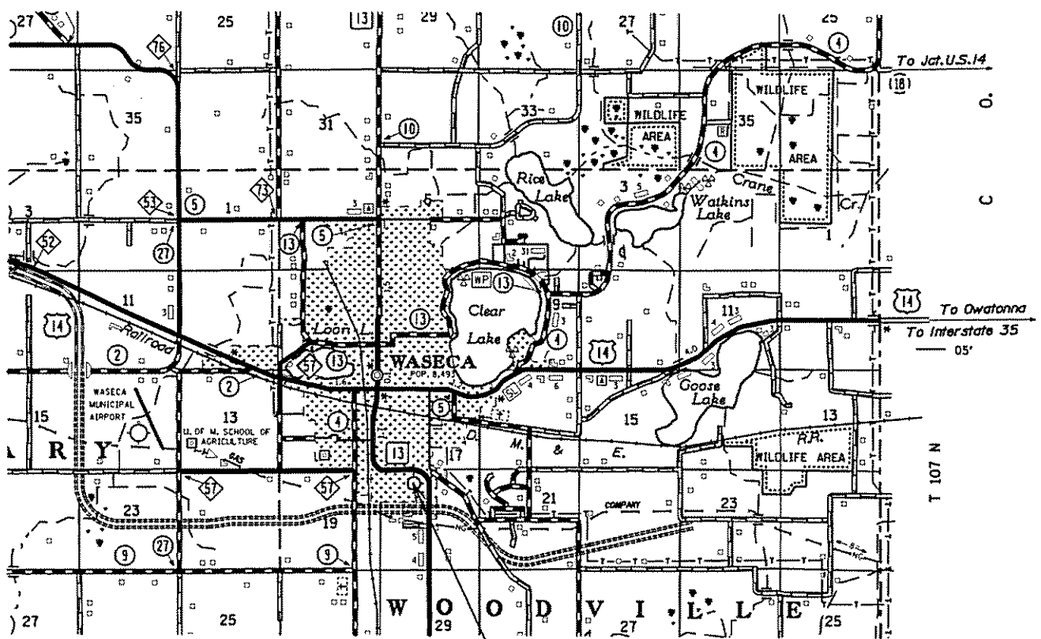

SP 8101-46
MNDOT (WASECA) TRUCK STATION

SCALES
PLAN
PROFILE HORIZ. VERT.
INDEX MAP
GENERAL LAYOUT

PLAN REVISIONS		
DATE	SHEET NO.	APPROVED BY

DESIGN DESIGNATION

Design ESALS ..... = ...
ADT (Current Year) ..... = ...
ADT (Future Year) ..... = ...
DHV (Design Hr. Vol.) ..... = ...
D (Directional Distr.) ..... = ... %
T (Heavy Commercial) ..... = ... %

Design Speed ..... MPH
Based on ..... Sight Distance .....
Height of eye ..... Height of object .....
Design Speed not achieved at: .....
STA. ..... TO STA. ..... MPH
STA. ..... TO STA. ..... MPH

PROJECT LOCATION
COUNTY : WASECA
DISTRICT : 7A MANKATO

FOR PLANS AND UTILITIES SYMBOLS SEE TECHNICAL MANUAL

STATE PROJ. NO.	CHARGE IDENTIFIER
8101-46	

FED. PROJ. NO. ..... STATE FUNDS .....

GOVERNING SPECIFICATIONS

THE 2005 EDITION OF THE MINNESOTA DEPARTMENT OF TRANSPORTATION "STANDARD SPECIFICATIONS FOR CONSTRUCTION", SHALL GOVERN.

INDEX

SHEET NO.	DESCRIPTION
1	TITLE SHEET
2	ESTIMATED QUANTITIES
3	TYPICAL SECTION
4-4A	DESIGN DETAILS
5	CONSTRUCTION PLAN
6	DRAINAGE PLAN
7-9	BUILDING DETAILS
10	SWPPP

THIS PLAN CONTAINS 11 SHEETS

I HEREBY CERTIFY THAT THIS PLAN WAS PREPARED BY ME OR UNDER MY DIRECT SUPERVISION AND THAT I AM A DULY LICENSED PROFESSIONAL ENGINEER UNDER THE LAWS OF THE STATE OF MINNESOTA.

PRINT NAME: Scott Morgan LICENSE # 25130
DATE: 2/1/08 SIGNATURE: Scott Morgan
DESIGN SQUAD .....

RECOMMENDED FOR APPROVAL James W. Swenson Feb 1 2008
DISTRICT TRANSPORTATION ENGINEER
RECOMMENDED FOR APPROVAL John C Hager 2/1 2008
DISTRICT MATERIALS ENGINEER
RECOMMENDED FOR APPROVAL Scott Morgan 2/1 2008
DISTRICT WATER RESOURCES/HYDRAULICS ENGINEER
RECOMMENDED FOR APPROVAL Marcus F. Gran 2/4 2008
DISTRICT TRAFFIC ENGINEER
RECOMMENDED FOR APPROVAL Danny Gun 3/6 2008
STATE PROJECTING ENGINEER
OFFICE OF LAND MANAGEMENT APPROVAL M. Strasberg 3/17 2008
for DIRECTOR, LAND MANAGEMENT
APPROVED 3/18 2008 for Julie Skallman
STATE DESIGN ENGINEER

I HEREBY CERTIFY THAT THE FINAL FIELD REVISIONS, IF ANY, WERE PREPARED BY ME OR UNDER MY DIRECT SUPERVISION AND THAT I AM A DULY LICENSED PROFESSIONAL ENGINEER UNDER THE LAWS OF THE STATE OF MINNESOTA.

PRINT NAME: ..... LICENSE # .....
DATE: ..... SIGNATURE: .....

STATE PROJ. NO. 8101-46 (TH 13 = 13) SHEET NO. 1 OF 10 SHEETS

PLOTTED/REVISED: 01-FEB-2008 10:20
DISTRICT #: 7 - Mankato/Windom
USER NAME: ReemiRon
PATH & FILENAME: \\mkow2k3ir3\data\Prj\th013\8101-46\design\d8101-46_tshdgn

STANDARD PLATES TABULATION

THE FOLLOWING STANDARD PLATES, APPROVED BY THE FEDERAL HIGHWAY ADMINISTRATION, SHALL APPLY ON THIS PROJECT.

PLATE NO.	DESCRIPTION
4006 L	MANHOLE OR CATCH BASIN PRECAST - DESIGN G AND H
4011 E	PRECAST CONCRETE BASE
4154 B	CATCH BASIN GRATE CASTING - CASTING NO. 816
4160 D	CURB BOX CASTING FOR CATCH BASIN - CASTING NO. 823A AND 833A
7100 H	CONCRETE CURB AND GUTTER (DESIGN B AND DESIGN V)
7102 I	CONCRETE CURB AND GUTTER (DESIGN BR, D, S, B4, B5, AND D3)
7111 J	INSTALLATION OF CATCH BASIN CASTINGS (CONCRETE CURB AND GUTTER)
8150 C	INSTALLATION OF CULVERT MARKERS
9000 D	APPROACHES AND ENTRANCES (RECOMMENDED STANDARDS)

UTILITY TABULATION

STATION TO STATION	OFFSET (FT)	DESCRIPTION	OWNER	ADJUST	RELOCATE	LEAVE AS IS	REMARKS
PROP TH 13							
159+20 - 161+93	108L - 454L	15" SAN	City of Waseca			X	
161+93	454L	SAN MH	City of Waseca			X	
161+93 - 162+55	454L - 532L	15" SAN	City of Waseca			X	

City of Waseca
Fred Salsbury, City Engineer
508 South State Street
Waseca, MN 56093-3097

GENERAL NOTES:

A. CONTRACTOR SHALL CALL "GOPHER ONE CALL" BEFORE EXCAVATING 1-800-252-1166. INFORMATION REQUIRED: TOWNSHIP, RANGE, AND QUARTER SECTION.

B. THE SUBSURFACE UTILITY INFORMATION IN THIS PLAN IS UTILITY QUALITY LEVEL D. THIS UTILITY QUALITY LEVEL WAS DETERMINED ACCORDING TO THE GUIDELINE OF CI/ASCE 83-02, ENTITLED STANDARD FOR THE COLLECTIONS AND DEPICTION OF EXISTING SUBSURFACE UTILITY DATA.

STATEMENT OF ESTIMATED QUANTITIES

TAB.	SHEET NO.	ITEM NO.	DESCRIPTION		UNITS	TOTAL ESTIMATED QUANTITIES
		2021.501	MOBILIZATION		LUMP SUM	0.01
		2031.501	FIELD OFFICE TYPE D-MODIFIED		EACH	0.01
		2031.503	FIELD LABORATORY TYPE DX-MODIFIED		EACH	0.01
		2100.601	RELOCATE BUILDING		LUMP SUM	1
		2104.509	REMOVE DROP INLET		EACH	1
		2105.501	COMMON EXCAVATION	(P)	CU YD	3044
		2105.507	SUBGRADE EXCAVATION	(P)	CU YD	5052
		2105.522	SELECT GRANULAR BORROW (CV)	(1)	CU YD	5052
		2211.503	AGGREGATE BASE (CV) CLASS 5		CU YD	2086
		2211.607	CRUSHED ROCK		CU YD	250
		2360.501	TYPE SP 12.5 WEARING COURSE MIXTURE (3,F)		TON	2111
		2502.521	8" PE PIPE DRAIN		LIN FT	361
		2502.521	15" PE PIPE DRAIN		LIN FT	68
		2502.521	6" PVC PIPE DRAIN		LIN FT	467
		2502.541	4" PERF PVC PIPE DRAIN		LIN FT	1411
		2502.602	PIPE DRAIN RISER		EACH	2
		2506.501	CONSTRUCT DRAINAGE STRUCTURE DESIGN H		LIN FT	2.6
		2506.516	CASTING ASSEMBLY		EACH	1
		2511.502	RANDOM RIPRAP CLASS III		TON	12
		2531.501	CONCRETE CURB & GUTTER DESIGN B624		LIN FT	794
		2531.501	CONCRETE CURB & GUTTER DESIGN D424		LIN FT	341
		2554.509	GUIDE POST TYPE B		EACH	1
		2573.502	SILT FENCE, TYPE MACHINE SLICED		LIN FT	1173
		2575.501	SEEDING		ACRE	4.3
		2575.502	SEED MIXTURE 270	(2)	POUND	203
		2575.502	SEED MIXTURE 310	(2)(4)	POUND	17
		2575.511	MULCH MATERIAL TYPE 3	(3)	TON	5
		2575.519	DISK ANCHORING		ACRE	4.3
		2575.532	FERTILIZER TYPE 1	(5)	POUND	860
		2575.545	WEED SPRAYING		ACRE	4.3

(1) BASIS OF PAYMENT SPECIFIED UNDER SPEC. 1903 SHALL BE MODIFIED TO PRECLUDE ANY PRICE ADJUSTMENT FOR INCREASED OR DECREASED QUANTITIES.

(2) APPLY AT A RATE OF 50 LB/AC FOR SEED MIX 270, 82 LBS/AC FOR 310.

(3) TYPE STRAW, APPLY AT A RATE OF 2000 LBS/AC.

(4) TO BE USED FOR SEEDING THE POND AREA.

(5) ANALYSIS 20-10-20 APPLIED AT A RATE OF 200 LBS/AC.

CERTIFIED BY Scott Morgan 25130 26-FEB-2008
LICENSED PROFESSIONAL ENGINEER LIC NO. DATE

ESTIMATED QUANTITIES

STATE PROJ. NO. 8101-46 (TH 13) SHEET NO. 2 OF 10 SHEETS

PLOTTED/REVISED: 26-FEB-2008 09:10
DISTRICT #: 7 - Mankato/Windom
USER NAME: ReemiRon
PATH & FILENAME: \\mkow2k3fr3\data\Pr\NIO13\8101N46\design\d8101n46_tb.dgn

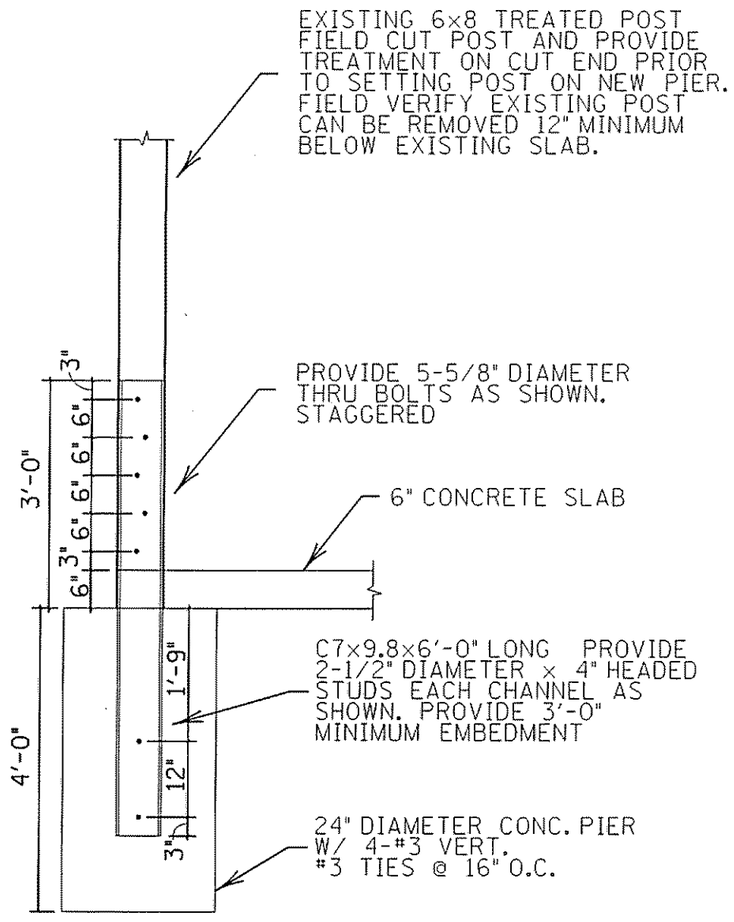

FOOTING DETAIL
(BUILDING RELOCATION)

PROPOSED TYPICAL SECTION

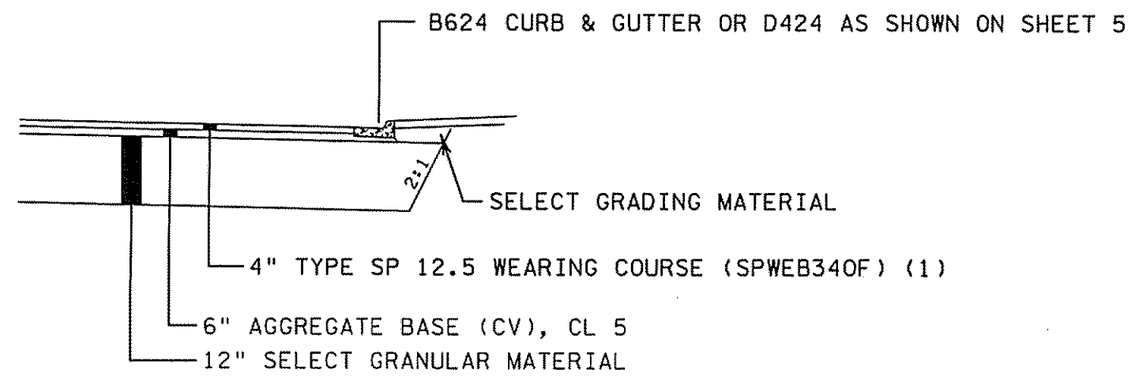

NOTES:

(1) PLACE IN TWO EQUAL LIFTS.

CERTIFIED BY Scott Morgan 25130 26-FEB-2008
LICENSED PROFESSIONAL ENGINEER LIC NO. DATE

TYPICAL SECTIONS

STATE PROJ. NO. 8101-46 (TH 13) SHEET NO. 3 OF 10 SHEETS

PLOTTED/REVISED: 26-FEB-2008 09:10
DISTRICT #: 7 - Mankato/Windom
USER NAME: ReemiRon
PATH & FILENAME: \\mkow2k3fr3\data\Prj\th013\8101\46\design\d8101-46_ts.dgn

STANDPIPE DRAIN PIPE RISER

Riser to match Drain Pipe Size

NOTE:
THE FIRST ONE FOOT ABOVE GROUND
SHALL HAVE THE HOLES SEALED.

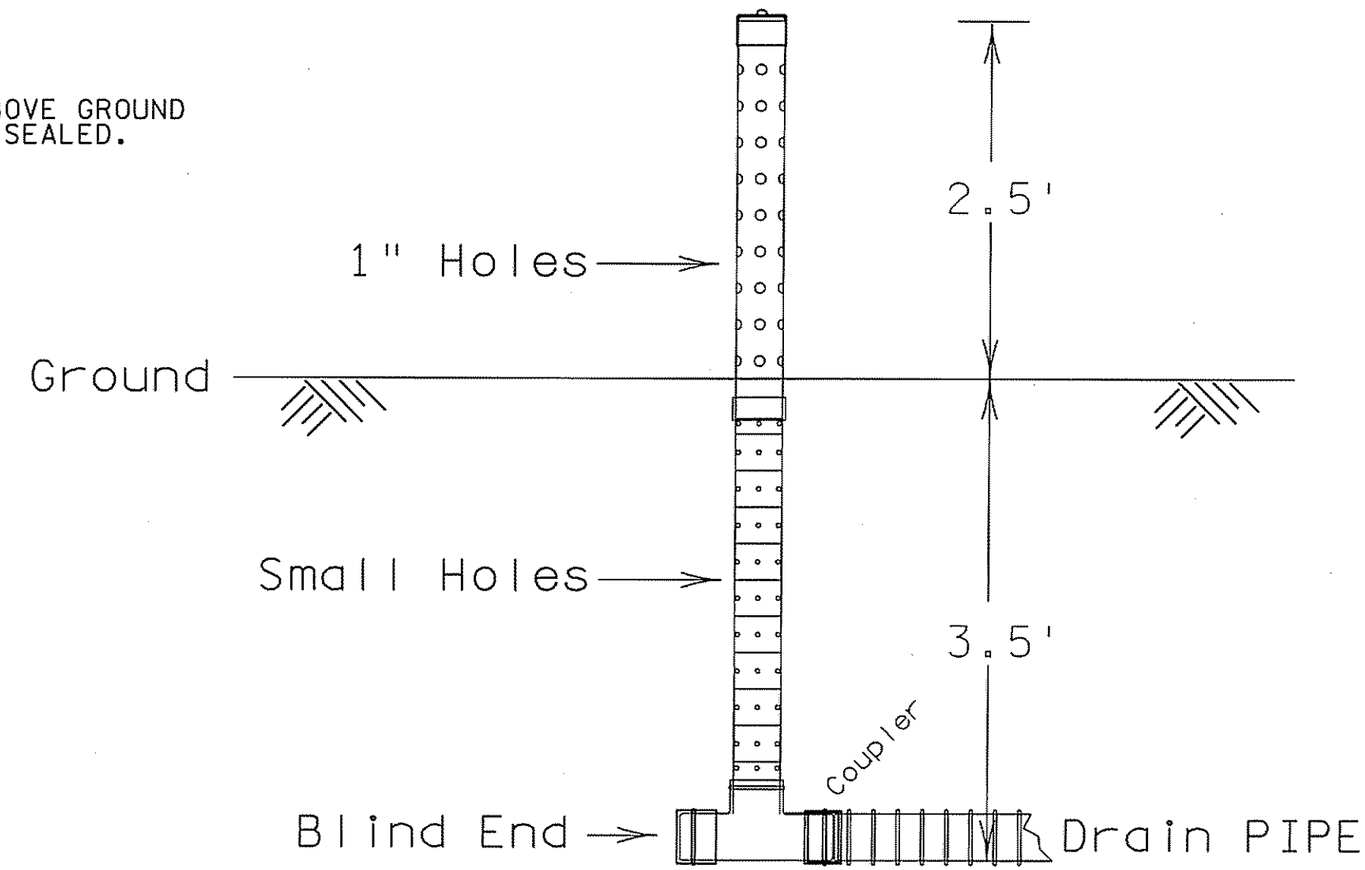

CERTIFIED BY Scott Morgan 25130 26-FEB-2008
LICENSED PROFESSIONAL ENGINEER LIC NO. DATE

DETAIL SHEET

STATE PROJ. NO. 8101-46 (TH 13) SHEET NO. 4 OF 10 SHEETS

PLOTTED/REVISED: 26-FEB-2008 09:10
DISTRICT #: 7 - Mankato/Windom
USER NAME: ReemiRon
PATH & FILENAME: \\mkow2k3ir3\data\Prj\th013\8101\46\design\d8101-46_dd.dgn

PLOTTED/REVISED: 03-MAR-2008 12:59
DISTRICT #: 7 - Mankato/Windom
USER NAME: Reem/Ron
PATH & FILENAME: S:\Pr_Mn\DOT\8101\46\design\d8101\46_dd.dgn

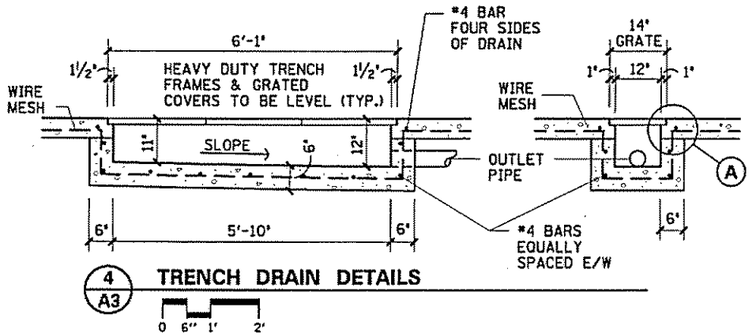

4 / A3 TRENCH DRAIN DETAILS

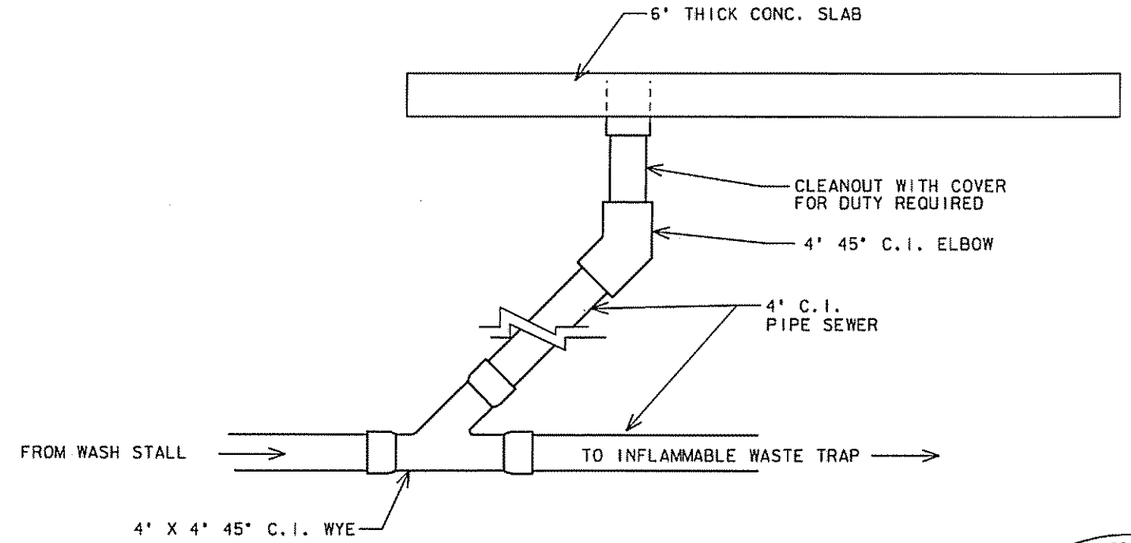

REVERSE CLEANOUT DETAIL (TYP.)

NO SCALE

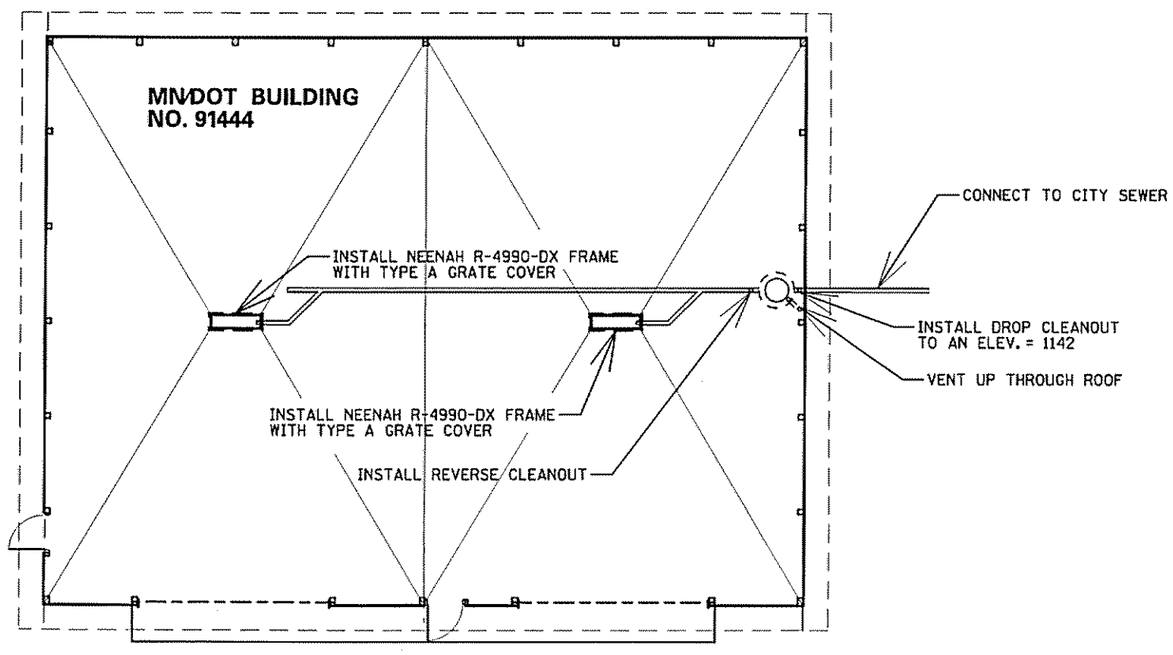

FLOOR PLAN (TRENCH DRAIN PIPING AND WASTE TRAP LOCATION)

0 2' 4' 8'

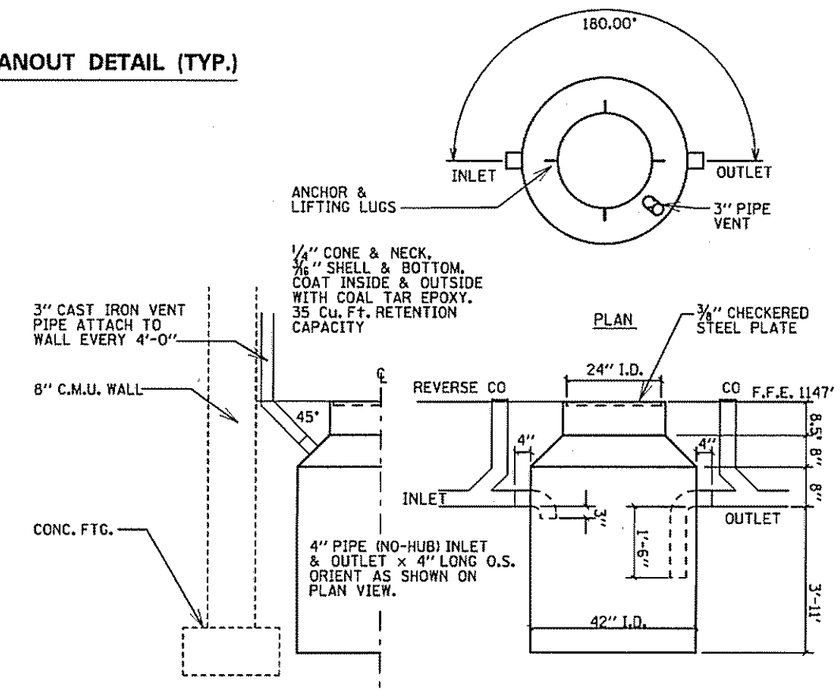

INFLAMMABLE WASTE TRAP

NO SCALE

INFLAMMABLE WASTE TRAP

WATERTIGHT WASTE TRAP CONSTRUCTED OF 3/16" STEEL PLATE WITH A 3/8" SOLID CHECKERED STEEL PLATE
COVER, INLET, OUTLET AND VENT OPENING WITH A MINIMUM OF 35 CU. FT. HOLDING CAPACITY, WITH COAL TAR EPOXY COATING BOTH INSIDE AND OUT.

SHALL BE APPROVED BY ENGINEER.

CERTIFIED BY Scott Morgan — LICENSED PROFESSIONAL ENGINEER | 25130 — LIC NO. | 03-MAR-2008 — DATE

DETAIL SHEET

STATE PROJ. NO. 8101-46 (TH 13) SHEET NO. 4A OF 10 SHEETS

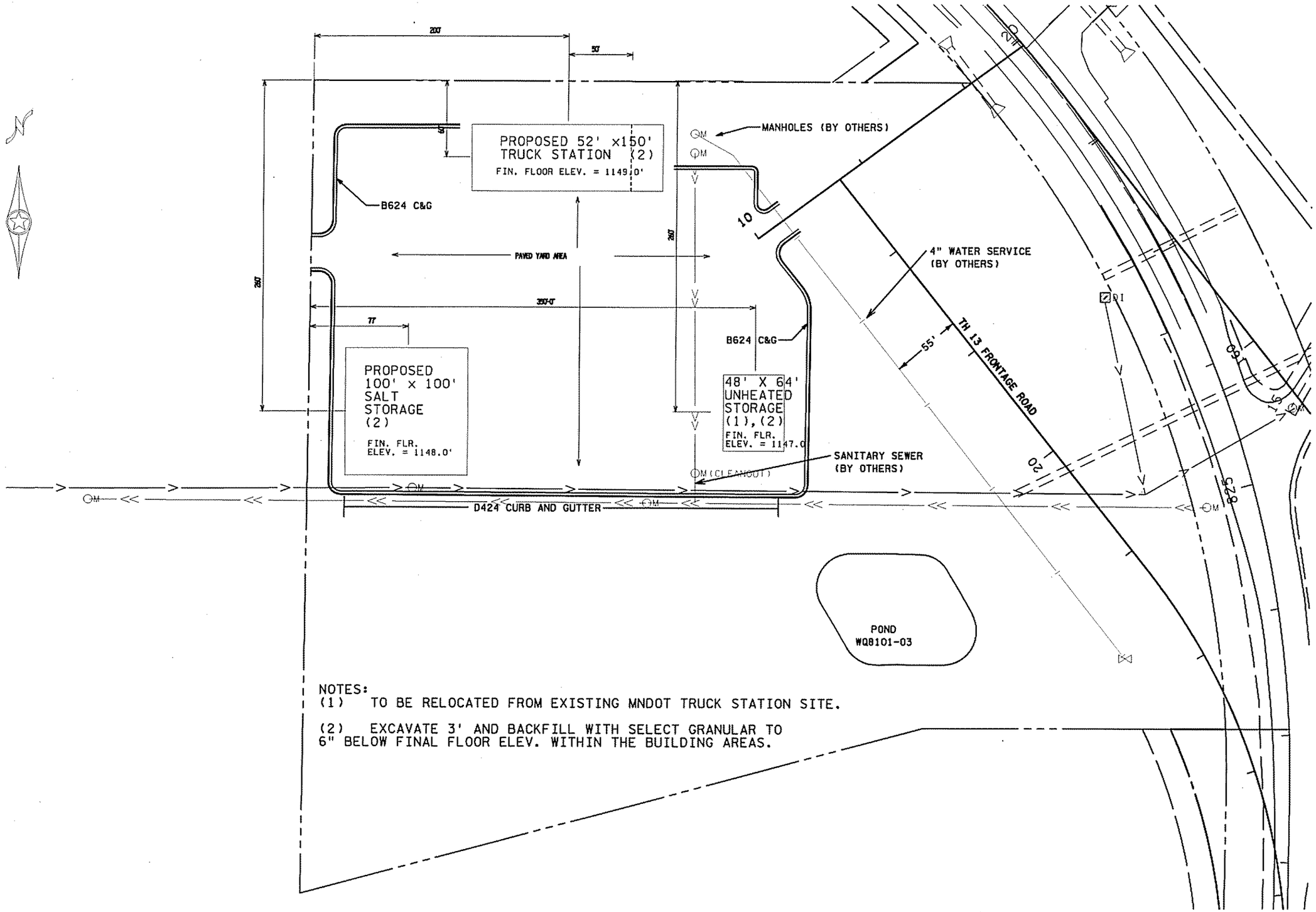

NOTES:
(1) TO BE RELOCATED FROM EXISTING MNDOT TRUCK STATION SITE.

(2) EXCAVATE 3' AND BACKFILL WITH SELECT GRANULAR TO 6" BELOW FINAL FLOOR ELEV. WITHIN THE BUILDING AREAS.

CERTIFIED BY Scott Morgan 25130 26-FEB-2008
LICENSED PROFESSIONAL ENGINEER LIC NO. DATE

CONSTRUCTION PLAN

STATE PROJ. NO. 8101-46 (TH 13) SHEET NO. 5 OF 10 SHEETS

PLOTTED/REVISED: 26-FEB-2008 09:10

DISTRICT #: 7 - Mankato/Windom
USER NAME: ReemiRon
PATH & FILENAME: \\mkow2k3fr3\data\Pr\N013\810\46\design\d810146_cpl.dgn

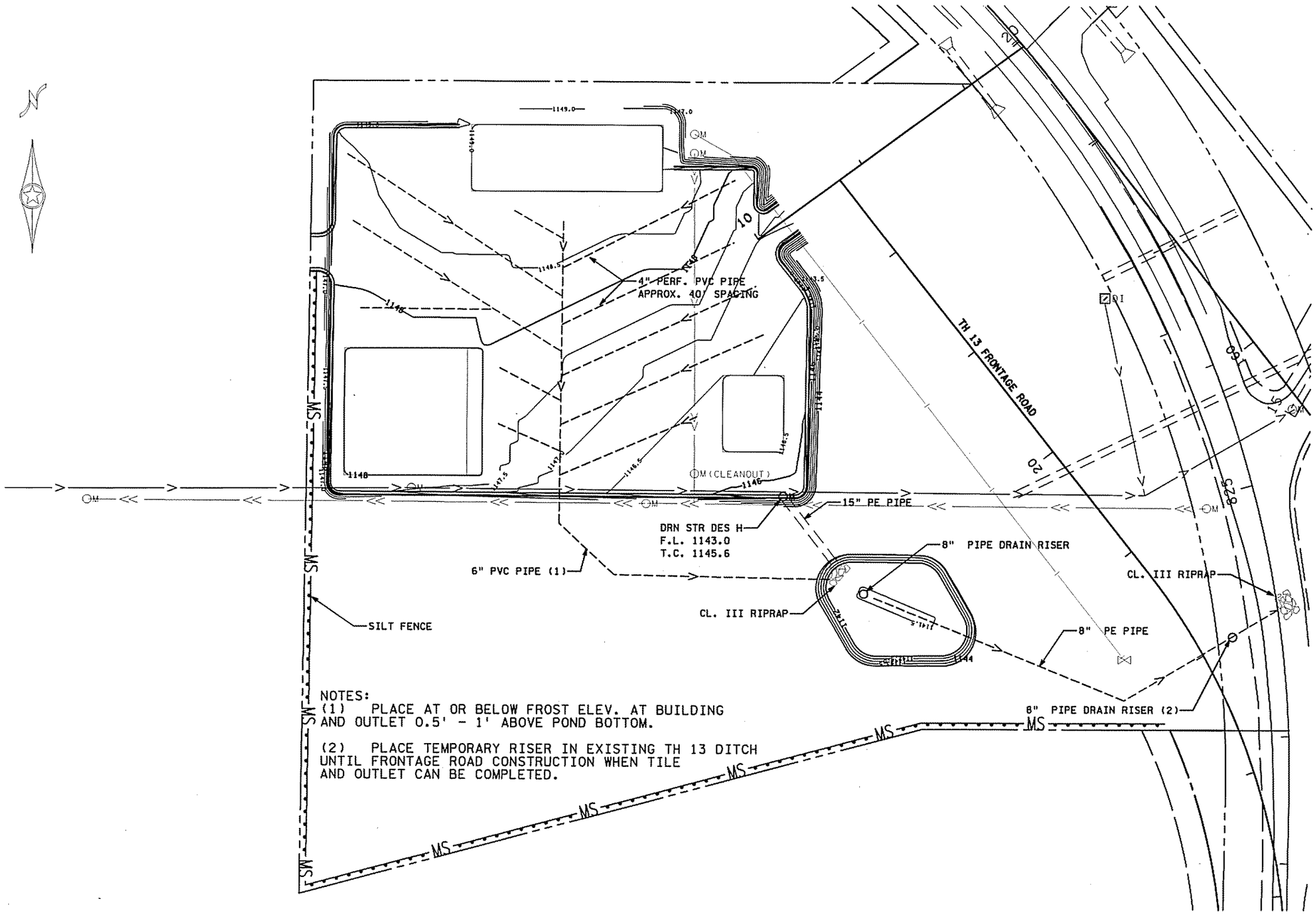

NOTES:

(1) PLACE AT OR BELOW FROST ELEV. AT BUILDING AND OUTLET 0.5' - 1' ABOVE POND BOTTOM.

(2) PLACE TEMPORARY RISER IN EXISTING TH 13 DITCH UNTIL FRONTAGE ROAD CONSTRUCTION WHEN TILE AND OUTLET CAN BE COMPLETED.

CERTIFIED BY Scott Morgan 25130 26-FEB-2008
LICENSED PROFESSIONAL ENGINEER LIC NO. DATE

DRAINAGE PLAN

STATE PROJ. NO. 8101-46 (TH 13) SHEET NO. 6 OF 10 SHEETS

PLOTTED/REVISED: 26-FEB-2008 09:10

DISTRICT #: 7 - Mankato/Windom
USER NAME: ReemlRon
PATH & FILENAME: \\mkow2k3fr3\data\Pr\N\013\8101\46\design\d8101146_cp2.dgn

PLOTTED/REVISED: 26-FEB-2008 09:10
DISTRICT #: 7 - Mankato/Windom
USER NAME: ReemiRon
PATH & FILENAME: \\mkow2k3fr3\data\Prj\MN013\810\46\design\8101146_dd2.dgn

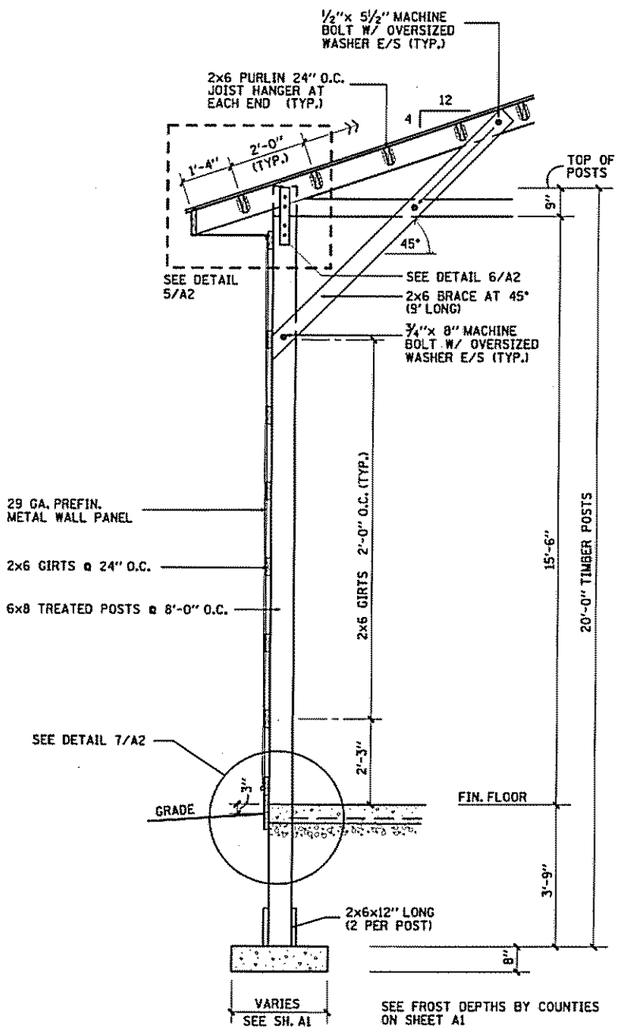

1/A2 LOAD BEARING WALL SECTION

0 6" 1' 2'

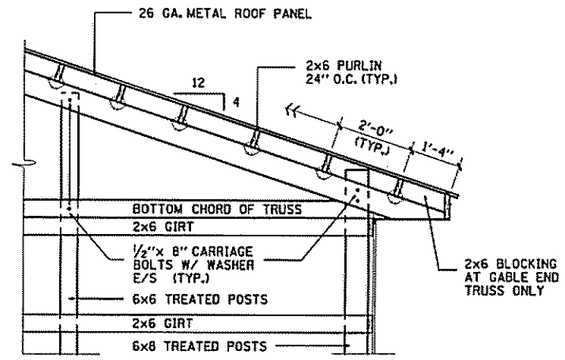

2/A2 GABLE END TRUSS & POSTS

0 6" 1' 2'

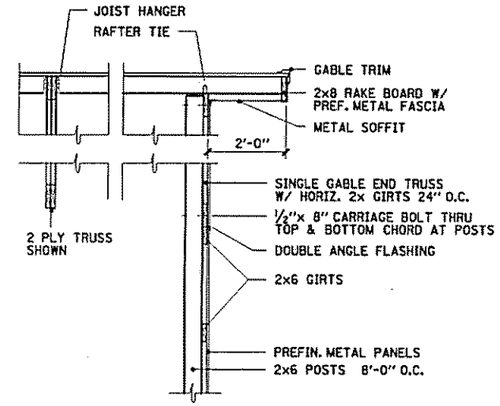

3/A2 GABLE END WALL SECTION

0 6" 1' 2'

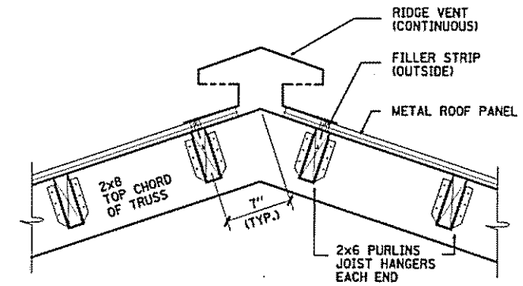

4/A2 TYPICAL RIDGE VENT DETAIL

0 3" 6" 1'

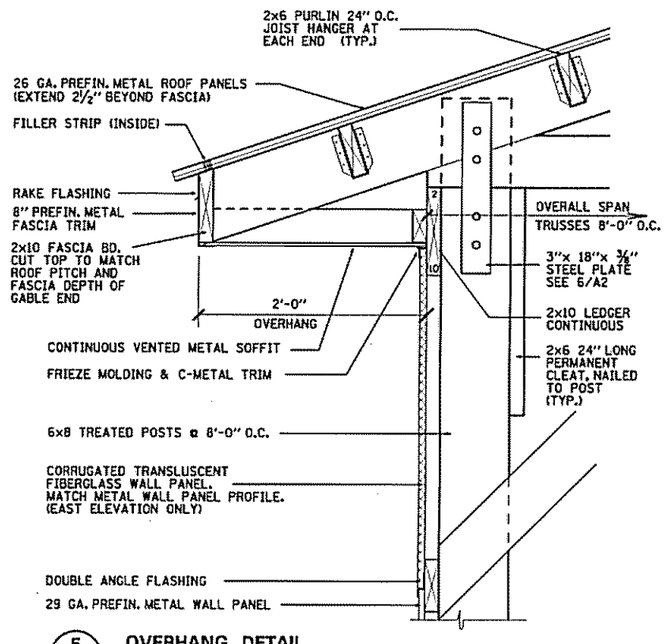

5/A2 OVERHANG DETAIL

0 3" 6" 1'

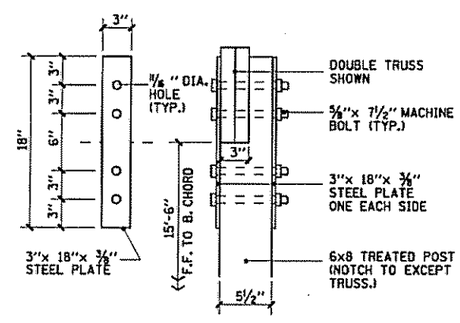

6/A2 POST & 2 PLY TRUSS CONNECTION

0 3" 6" 1'

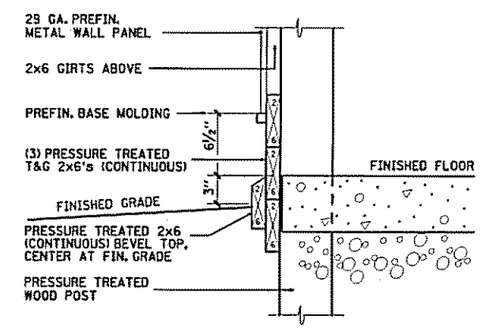

7/A2 EXTERIOR BASEBOARD DETAIL

0 3" 6" 1'

INFORMATION ONLY

CERTIFIED BY Scott Morgan 25130 SIGDATE
LICENSED PROFESSIONAL ENGINEER LIC NO. DATE

EXISTING BUILDING DETAILS

STATE PROJ. NO. 8101-46 (TH 13) SHEET NO. 7 OF 10 SHEETS

PLOTTED/REVISED: 26-FEB-2008 09:10
DISTRICT #: 7 - Mankato/Windom
USER NAME: ReemiRon
PATH & FILENAME: \\mkow2k3fr3\data\Pr\NH013\8101-46\design\d8101-46_dd2.dgn

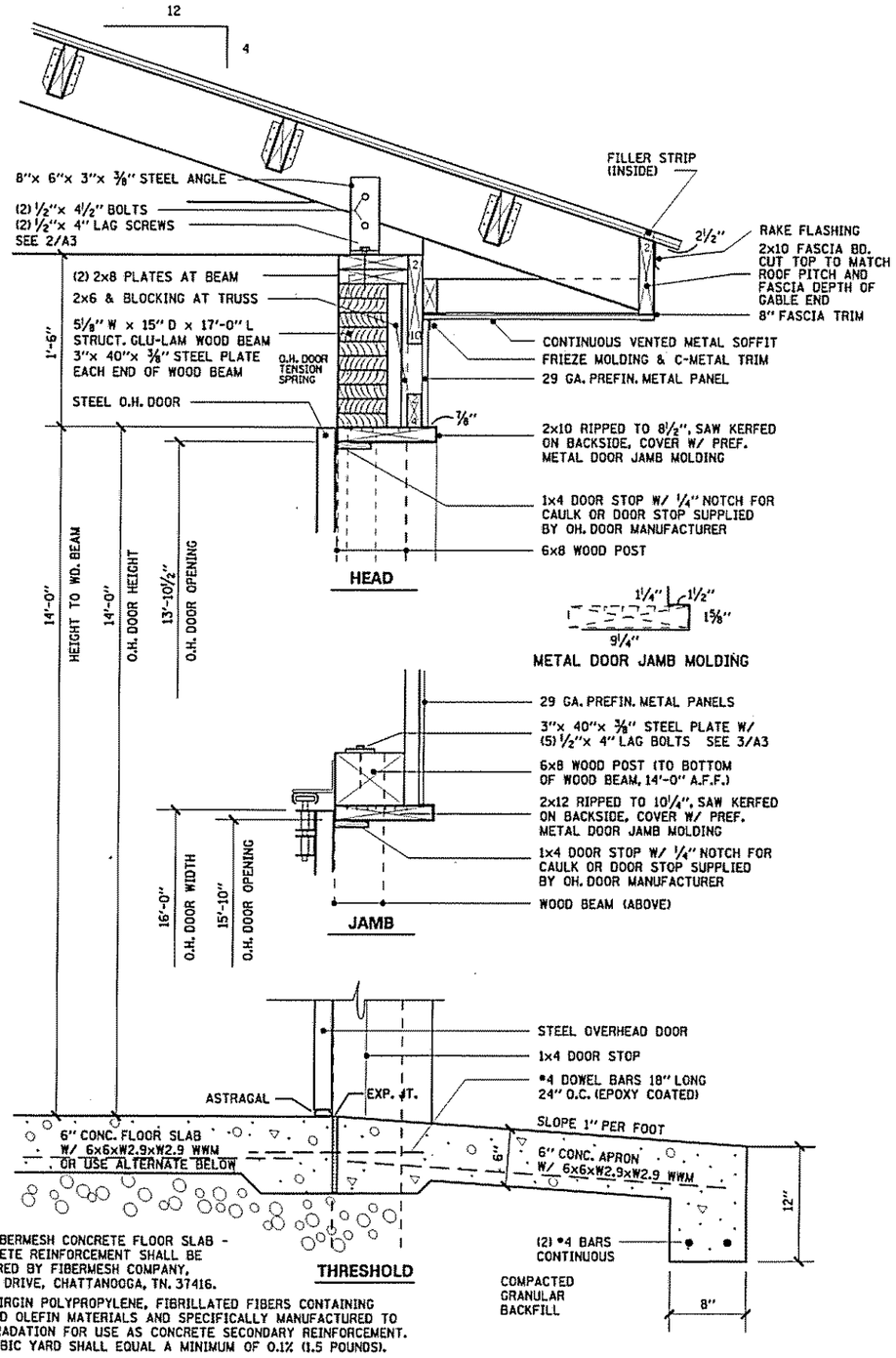

ALTERNATE: FIBERMESH CONCRETE FLOOR SLAB - FIBROUS CONCRETE REINFORCEMENT SHALL BE AS MANUFACTURED BY FIBERMESH COMPANY, 4019 INDUSTRY DRIVE, CHATTANOOGA, TN. 37416.

100 PERCENT VIRGIN POLYPROPYLENE, FIBRILLATED FIBERS CONTAINING NO REPROCESSED OLEFIN MATERIALS AND SPECIFICALLY MANUFACTURED TO AN OPTIMUM GRADATION FOR USE AS CONCRETE SECONDARY REINFORCEMENT. VOLUME PER CUBIC YARD SHALL EQUAL A MINIMUM OF 0.1% (1.5 POUNDS).

1 / A3 DETAIL AT OVERHEAD DOORS IN LOAD BEARING WALL

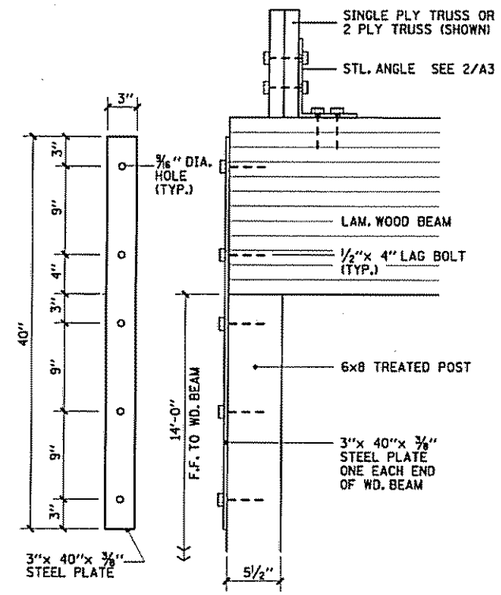

3 / A3 POST & WOOD BEAM CONNECTION

0 3" 6" 1'

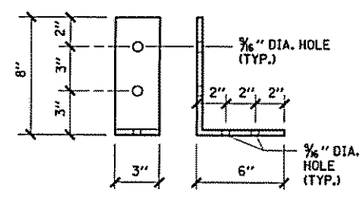

2 / A3 STEEL ANGLE @ TRUSS & BEAM

0 3" 6" 1'

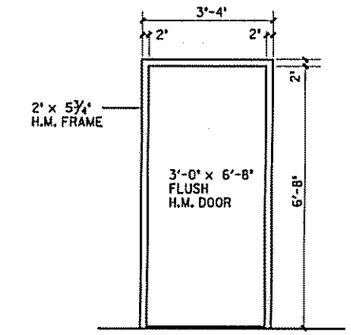

5 / A3 DOOR (D-1) & FRAME (F-1)

SEE DETAILS 4/A3

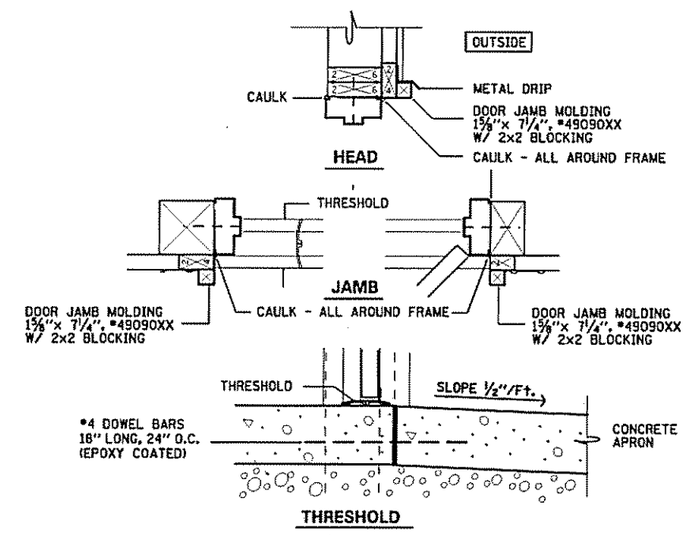

4 / A3 DETAILS @ EXTERIOR PED. DOORS

0 3" 6" 1'

INFORMATION ONLY

CERTIFIED BY Scott Morgan 25130 SIGDATE
LICENSED PROFESSIONAL ENGINEER LIC NO. DATE

EXISTING BUILDING DETAILS

STATE PROJ. NO. 8101-46 (TH 13) SHEET NO. 8 OF 10 SHEETS

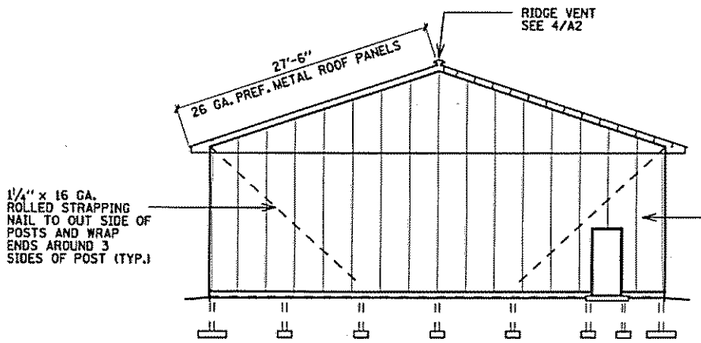

2 A1 GABLE END ELEVATION (NORTH)

0 2' 4' 8'

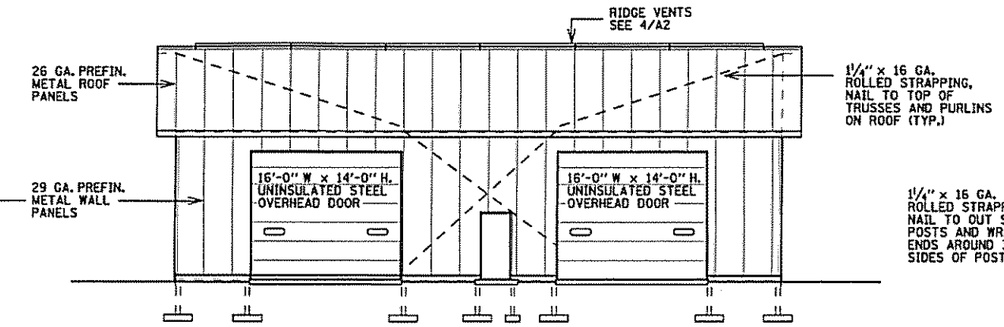

3 A1 FRONT ELEVATION (WEST)

0 2' 4' 8'

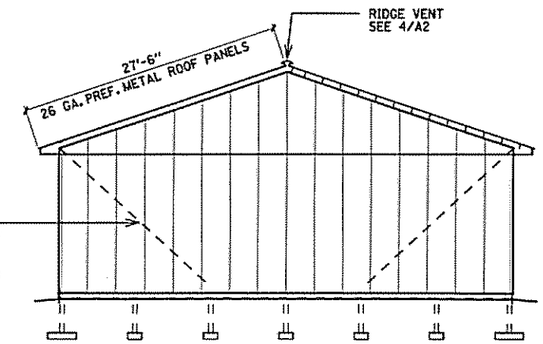

4 A1 GABLE END ELEVATION (SOUTH)

0 2' 4' 8'

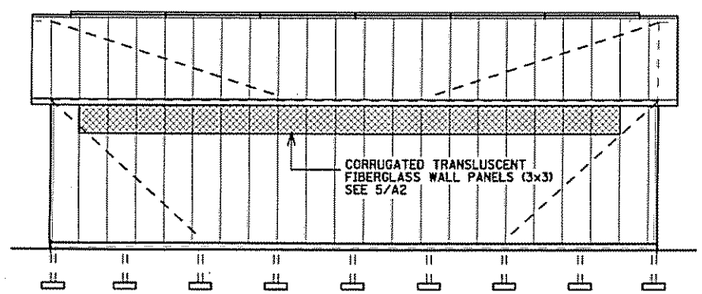

5 A1 BACK ELEVATION (EAST)

0 2' 4' 8'

NOTE : FOR SITE PLAN SEE SHEET A1

NOTES :

FOUNDATION CONSTRUCTION SHALL COMPLY WITH THE FOLLOWING:

a. MAXIMUM ALLOWABLE SOIL BEARING PRESSURE = 2000 psf for PAD FOOTINGS.
b. ALL FOOTINGS AND SLABS SHALL REST ON COMPACTED NATURAL COMPETENT SOILS.
c. MINIMUM FROST FOOTING DEPTH SHALL BE 3'-6"
d. IF SOIL ENCOUNTERED AT BOTTOM OF FOOTINGS AND BENEATH SLABS IS OF QUESTIONABLE BEARING VALUE, IT SHALL BE REMOVED AND REPLACED WITH COMPACTED AGGREGATE BASE PER THE RECOMMENDATIONS OF THE SOILS ENGINEER.

CAST-IN-PLACE CONCRETE REQUIREMENTS SHALL BE AS FOLLOWS:

a. ARRANGEMENT AND BENDING OF REINFORCING STEEL SHALL BE IN ACCORDANCE WITH ACI "MANUAL OF STANDARD PRACTICE FOR DETAILING REINFORCING CONCRETE STRUCTURES ".
b. PROVIDE SUITABLE WIRE SPACERS, CHAIRS AND TIES FOR SUPPORTING REINFORCING STEEL IN PROPER POSITION.
c. COORDINATE SIZES AND LOCATION OF SLEEVES, INSERTS, AND BOXOUTS REQUIRED BY OTHER TRADES.
d. ALL EXPOSED FLOOR SLABS SHALL BE SURFACE SEALED.
e. CONCRETE SLABS SHALL HAVE A MINIMUM AIR ENTRAINMENT OF 5.5% ± 1.5%.

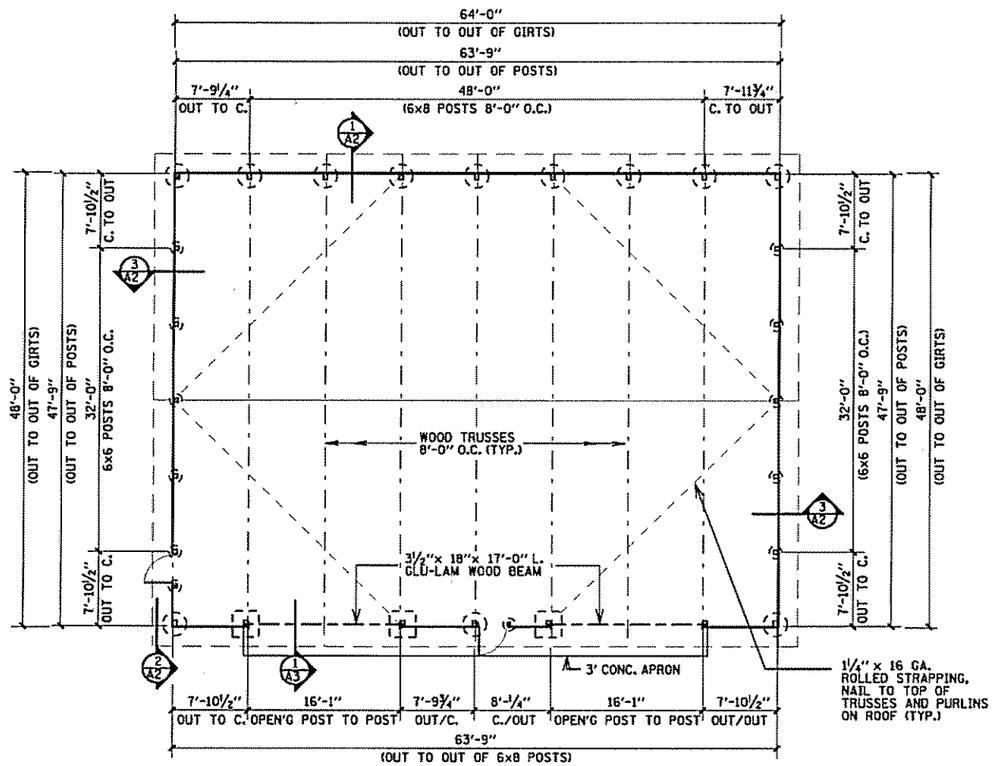

1 A1 FLOOR PLAN (FOOTING, POST & TRUSS LOCATION)

0 2' 4' 8'

36" DIAMETER x 8" CONCRETE FOOTING OR 32"x 32"x 8" CONCRETE FOOTING AT OVERHEAD DOOR LOAD BEARING POSTS.

30" DIAMETER x 8" CONCRETE FOOTING OR 26"x 26"x 8" CONCRETE FOOTING AT LOAD BEARING POSTS.

16" DIAMETER x 8" CONCRETE FOOTING OR 14"x 14"x 8" CONCRETE FOOTING AT NON-LOAD BEARING POSTS.

BUILDING INFORMATION

BUILDING OCCUPANCY CLASSIFICATION

STORAGE-GENERAL S2

TYPE OF CONSTRUCTION

BUILDING CONSTRUCTION TYPE V N

BASIC ALLOWABLE FLOOR AREA

EXISTING	0	ALLOWED : 12,000
NEW	3072	INCREASE : OPEN 4 SIDES
TOTAL	3072	ALLOWED TOTAL : 24,000

BUILDING OCCUPANCY SEPARATION (MIXED OCCUPANCY)

N.A. SEPARATION IN HOURS N.R.

OCCUPANT LOAD

GROUP	NET AREA	S.F./OCC.	TOTAL OCC.
S2	3072	300	10

SNOW LOADS AND FROST DEPTHS BY COUNTIES

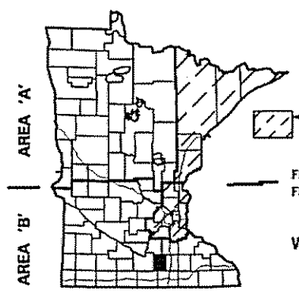

40# SNOW LOAD COUNTIES
30# SNOW LOAD ALL OTHERS •
MSBC 1305.4700
FROST DEPTH ABOVE LINE 5'-0" (AREA A)
FROST DEPTH BELOW LINE 3'-6" (AREA B) •
MSBC 1305.5400

WASECA COUNTY

INFORMATION ONLY

CERTIFIED BY Heath Morgan 25130 SIGDATE
LICENSED PROFESSIONAL ENGINEER LIC NO. DATE

EXISTING BUILDING DETAILS

STATE PROJ. NO. 8101-46 (TH 13) SHEET NO. 9 OF 10 SHEETS

PLOTTED/REVISED: 26-FEB-2008 09:10
DISTRICT #: 7 - Mankato/Windom
USER NAME: ReemiRon
PATH & FILENAME: \\mkow2k3fr3\data\Pr\Nt013\8101\46\design\d8101f6_dd2.dgn

STORM WATER POLLUTION PREVENTION PLAN (SWPPP)

Project Description
This project, SP 8101-46 (Highway 13), includes grading and base, bituminous surfacing, and site preparation for a MnDOT Truckstation at Waseca. The receiving waters for storm water from this site are local. There are no special or other impaired receiving waters associated with this project.

Project Engineer
The Project Engineer and the Contractor are responsible for implementation of the SWPPP and the installation, inspection, and maintenance of the erosion prevention and sediment control BMPs before and during construction. The Contractor will have an Erosion Control Supervisor who is responsible for coordinating the erosion prevention and sediment control BMPs. MN/DOT District 7 staff and members of MN/DOT's Office of Environmental Service are also available for assistance. MN/DOT District 7 Maintenance is responsible for long term operation and maintenance of the permanent storm water management system.

The MN/DOT Project Construction Supervisor is;
Susan Museus
East Resident Office
MN/DOT District 7
501 South Victory Drive
Mankato, MN 56001-5302
(507) 304-6202

District 7 Maintenance Contact;
Mello Lindberg
Mapleton Sub Area Supervisor
MN/DOT District 7
403 8th Street SE
Mapleton, MN 56065
(507) 524-4698

Timing of BMP Installation
The erosion prevention and sediment control BMP's shall be installed as necessary to minimize erosion from disturbed surfaces and capture sediment on site.

1. Disturbed areas will be permanently stabilized.
2. Topsoil stockpiles will be seeded if necessitated by project staging and approved by the Engineer.
3. Planned slopes of 3:1 (H:V) or steeper and greater than 75 ft. in length will be temporarily or permanently stabilized in increments not to exceed 75 ft, prior to constructing or disturbing a new increment.
4. During all subgrade excavation work, the subcut shall have stabilized outlets to the existing ditches.
6. See Special Provisions 1717 (Air, Land and Water Pollution) for Site Plan requirements in locations where 48" or larger culverts are being placed.

Calculations
Water quality volume
Total Impervious area after construction 2.37 Acres = 103,380 sq. Ft.
Water quality volume 103,380 sq. ft * ½ in = 4,308 cu. Ft.

WQ8101-03 Volume
The volume of the pond below elevation 1043.5 contour is 17,834 cu. ft. and is more than the total water quality volume required for the project.

Construction Notes

Construction shall be governed by MN/DOT Spec. Book and the special provisions.
The Contractor shall maintain a stockpile of erosion control devices at all times for immediate usage.
Soil Maps for the project are available for viewing at the MN/DOT District 7 Hydraulics Office.
The Contractor shall keep the inspection and maintenance log.
In the event of accidental sediment or pollutant discharge, the MPCA local contact and/or state duty officer shall be notified. The MPCA state duty officer can be reached at 1 (800) 422-0798.

TMDL Implementation Plans Containing Storm Water Requirements

No TMDL Implementation Plans currently exist for the receiving waters on this project.

Location of SWPPP Requirements in Project Plan

DESCRIPTION	TITLE	LOCATION
Summary of Pervious and Impervious	SWPPP SHEET	Sheet 10
Drainage Structures	Drainage Plan	Sheet 6
Erosion Control Details	Drainage Plan	Sheet 6
Pond Details	Drainage Plan	Sheet 6

Summary of Pervious and Impervious

	PERVIOUS	IMPERVIOUS
Before Construction	289,108 SQ FT	0 SQ FT
After Construction	185,728 SQ FT	103,380 SQ FT

CERTIFIED BY Scott Morgan 25130 29-FEB-2008
LICENSED PROFESSIONAL ENGINEER LIC NO. DATE

SWPPP SHEET
STATE PROJ. NO. 8101-46 (TH 13) SHEET NO. 10 OF 10 SHEETS

PLOTTED/REVISED: 29-FEB-2008 08:48
DISTRICT : 7 - Mankato/Windom
USER NAME: ReemiRon
PATH & FILENAME: \\mkow2k3fr3\data\Pr\th013\8101-46\design\d8101-46_swp.dgn

FED. PROJ. NO. NH0014(320)

MINNESOTA DEPARTMENT OF TRANSPORTATION

GRADING, BASE, CONCRETE, BITUMINOUS & AGGREGATE SURFACING, LIGHTING, SIGNING, BR 81X04, BR 81006,
CONSTRUCTION PLAN FOR BR 81007, BR 81008, BR 81009, BR 81010, BR. 81011, BR 81012, BR 81013, BR 81014, BR 81016

LOCATED ON T.H. 14 FROM 2231' N. OF CSAH 2 TO EAST WASECA COUNTY LINE

STATE PROJ. NO. 8103-49, T.H. 14

GROSS LENGTH	(A) 28340.52 FEET	5.368	MILES
BRIDGES-LENGTH	FEET		MILES
EXCEPTIONS-LENGTH	FEET		MILES
NET LENGTH	28340.52 FEET	5.368	MILES
REF. POINT	TO REF. POINT		

(A) BASED ON EBL STATIONING

STATE PROJ. NO. 8104-35, T.H. 14

GROSS LENGTH	(A) 24716.59 FEET	4.681	MILES
BRIDGES-LENGTH	FEET		MILES
EXCEPTIONS-LENGTH	FEET		MILES
NET LENGTH	24716.59 FEET	4.681	MILES
REF. POINT	TO REF. POINT		

"WARNING: Petroleum Products Pipeline"

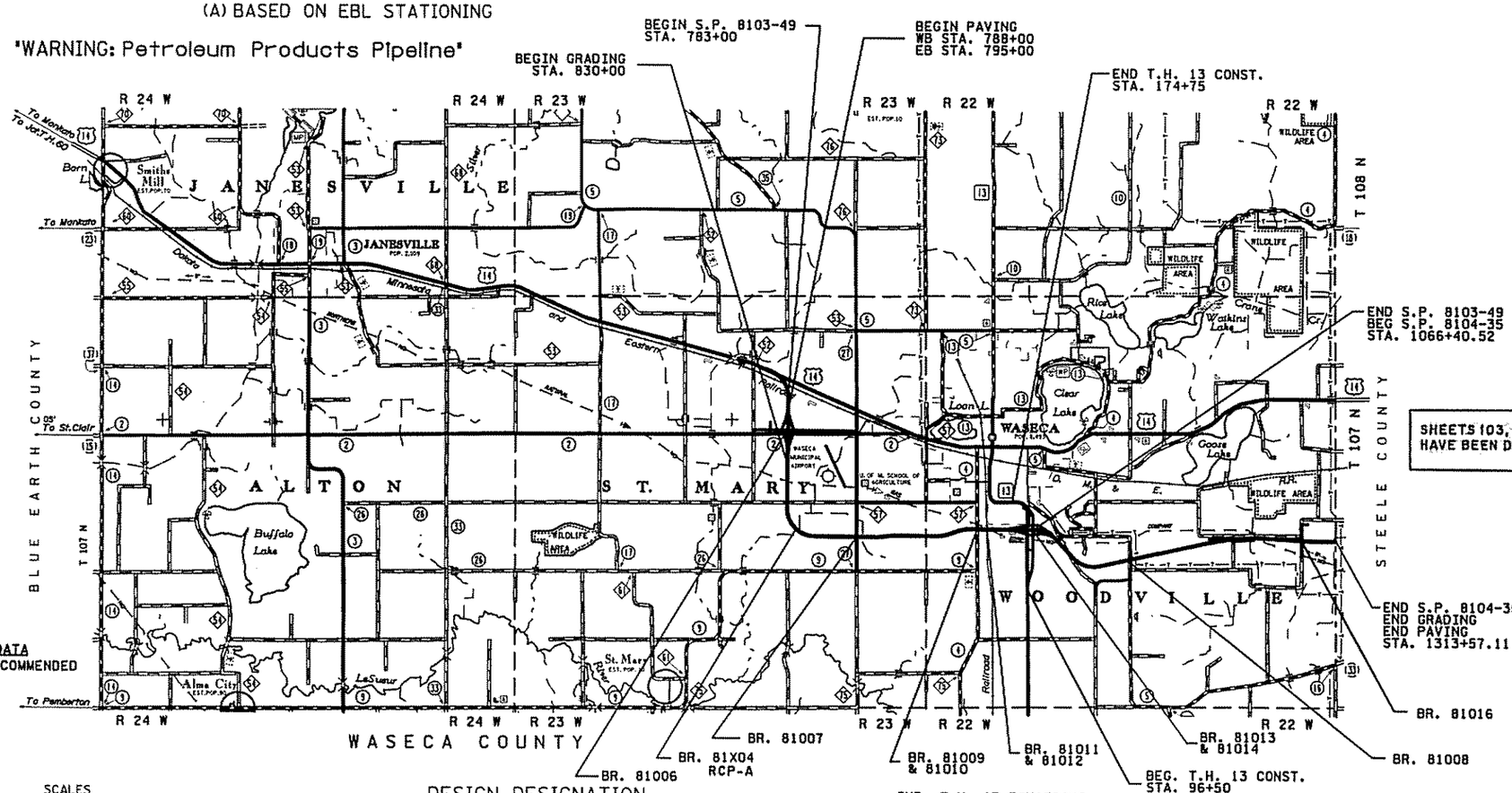

PIT DATA
NO PITS RECOMMENDED

SCALES

PLAN	50'	
PROFILE	50' HORIZ.	10' VERT.
INDEX MAP	5280'	
GENERAL LAYOUT	100'	

DESIGN DESIGNATION

Design ESALS =

ADT (Current Year) 2005 = 7,900
ADT (Future Year) 2027 = 12,000
DHV (Design Hr. Vol.) = 11%
D (Directional Distr.) = %
T (Heavy Commercial) = 14.9 %

T.H. 14
Design Speed 70 MPH

T.H. 13, STA. 96+50 - 135+00
Design Speed 60 MPH

T.H. 13, STA. 135+00 - 174+50
CSAH 27
Design Speed 50 MPH

CSAH 5
Design Speed 50 MPH

Based on STOPPING Sight Distance
Height of eye 3.5' Height of object 2.0'
Design Speed not achieved at:
STA. TO STA. MPH
STA. TO STA. MPH

INP. T.H. 13 EQUATIONS
STA. 800+56.71 (BK) = 800+57.96 (AH)
STA. 804+97.07 (BK) = 804+90.65 (AH)

WBL EQUATIONS
STA. 897+62.15 (BK) = 898+94.07 (AH)
STA. 950+06.81 (BK) = 950+17.64 (AH)
STA. 960+26.62 (BK) = 960+15.84 (AH)
STA. 1000+98.38 (BK) = 1001+27.12 (AH)
STA. 1018+62.69 (BK) = 1018+33.90 (AH)
STA. 1085+85.82 (BK) = 1085+18.38 (AH)
STA. 1127+02.14 (BK) = 1127+88.25 (AH)
STA. 1262+88.32 (BK) = 1262+65.06 (AH)
STA. 1301+06.08 (BK) = 1301+11.28 (AH)

CREEK AT EB STA 1247+63.94 EQUATION
STA. 14+78.06 (BK) = 13+96.20 (AH)

T.H. 13 EQUATIONS
STA. 764+05 (BK) = 96+50 (AH)
STA. 174+75 (BK) = 840+73 (AH)

FOR PLANS AND UTILITIES SYMBOLS SEE TECHNICAL MANUAL

STATE PROJ. NO.	CHARGE IDENTIFIER
S.P. 8103-49	
S.P. 8104-35	

PROJECT LOCATION
COUNTY : WASECA
DISTRICT : 7 - MANKATO

PLAN REVISIONS		
DATE	SHEET NO.	APPROVED BY

GOVERNING SPECIFICATIONS
THE 2005 EDITION OF THE MINNESOTA DEPARTMENT OF TRANSPORTATION "STANDARD SPECIFICATIONS FOR CONSTRUCTION", SHALL GOVERN.

INDEX

SHEET NO.	DESCRIPTION
1	TITLE SHEET
2-23	GENERAL LAYOUT SHEETS
24-27C	ESTIMATE SHEETS
28	CONSTRUCTION NOTES SHEET
29	STANDARD PLATES & DETAIL INDEX TAB.
30-44	EARTHWORK TABULATION SHEETS
45-56	TABULATION SHEETS
56A-56D	SPECIAL DITCH GRADE TAB. SHEETS
57-62	UTILITY TABULATION SHEETS
63-77	TYPICAL SECTION SHEETS
78-88	DETAIL SHEETS
89-124B	STANDARD PLAN SHEETS
125-128	ALIGNMENT TABULATION SHEETS
129-146	SUPERELEVATION SHEETS
147-230A	PLAN/PROFILE SHEETS
231-260	PLAN/PROFILE SHEETS
261-262A	DEMOLITION SHEETS
B1-B7	BRIDGE DETAIL SHEETS
F1-F15	RWIS SHEETS
H1-H35	DRAINAGE TABULATION SHEETS
H36-H59	DRAINAGE DETAIL SHEETS
H60	SWPPP SHEETS
H61-H88	POND CONTOUR SHEETS
H89-H154	DRAINAGE AND EROSION CONTROL SHEETS
H155-H158	DRAINAGE PROFILE SHEETS
M1-M11	MUNICIPAL SHEETS
T1-T58	TRAFFIC CONTROL SHEETS
T59	STRIPING SHEETS
T60-T67	LIGHTING SHEETS
T68-T112	SIGNING SHEETS
X1	CROSS SECTION INDEX SHEET
X2-X328	CROSS SECTION SHEETS

SHEETS 103, 107 HAVE BEEN DELETED.

THIS PLAN CONTAINS 902 SHEETS

I HEREBY CERTIFY THAT THIS PLAN WAS PREPARED BY ME OR UNDER MY DIRECT SUPERVISION AND THAT I AM A DULY LICENSED PROFESSIONAL ENGINEER UNDER THE LAWS OF THE STATE OF MINNESOTA.

PRINT NAME: ROLIN SINN LICENSE # 19888

DATE: 11/16/07 SIGNATURE: Rolin Sinn

DESIGN SQUAD P. HENTGES / R. REEMER / S. CRAY / C. FELBER / C. SLAMA

RECOMMENDED FOR APPROVAL James W. Swanson 11/29 2007
DISTRICT TRANSPORTATION ENGINEER

RECOMMENDED FOR APPROVAL John C. Hage 11/26 2007
DISTRICT MATERIALS ENGINEER

RECOMMENDED FOR APPROVAL Rolin Sinn 11/16 2007
DISTRICT WATER RESOURCES/HYDRAULICS ENGINEER

RECOMMENDED FOR APPROVAL Mark Fuger 11/21 2007
DISTRICT TRAFFIC ENGINEER

RECOMMENDED FOR APPROVAL Dennis J. Gimm 3/6 2008
TRS STATE PRE-LETTING ENGINEER

OFFICE OF LAND MANAGEMENT APPROVAL M. J. Shoblay 3/17 2008
for DIRECTOR, LAND MANAGEMENT

APPROVED 3/18 2008 Judy Stallman
for STATE DESIGN ENGINEER

I HEREBY CERTIFY THAT THE FINAL FIELD REVISIONS, IF ANY, WERE PREPARED BY ME OR UNDER MY DIRECT SUPERVISION AND THAT I AM A DULY LICENSED PROFESSIONAL ENGINEER UNDER THE LAWS OF THE STATE OF MINNESOTA.

PRINT NAME: LICENSE #

DATE: SIGNATURE:

STATE PROJ. NO. 8103-49 (TH 14=007) 8104-35 (TH 14=007) SHEET NO. 1 OF 262 SHEETS

PLOTTED/REVISED: 16-NOV-2007 07:53

DISTRICT #: 7 - Mankato/Windom
USER NAME: HentPeg
PATH & FILENAME: S:\Pr\NH\014\8103\49\design\d8103\49_1shdgn