MINNESOTA DEPARTMENT OF TRANSPORTATION

TODD COUNTY

CONSTRUCTION PLAN FOR SHOULDER WIDENING WITH BITUMINOUS OVERLAY, GRADING, BITUMINOUS OVERLAY, AND BOX CULVERT CONSTRUCTION

LOCATED ON C.S.A.H. #11 FROM SOUTH COUNTY LINE TO 1,354' SOUTH OF C.S.A.H. #2 AND FROM 1296' NORTH OF C.S.A.H. #2 TO STATE HIGHWAY #27

FROM: 1,868.9' W. OF S.E. COR. SEC. 29, T127N, R34W
TO: N.E. COR. SEC. 20, T128N, R34W

STATE PROJECT NO. 77-611-31

GROSS LENGTH	42,995.31	FEET	8.143	MILES
BRIDGES-LENGTH		FEET		MILES
EXCEPTIONS-LENGTH	2,650.00	FEET	0.502	MILES
NET LENGTH	40,345.31	FEET	7.641	MILES

LOCATED ON C.S.A.H. #11 FROM 1,354' SOUTH OF C.S.A.H. #2 TO 1296' NORTH OF C.S.A.H. #2

FROM: 1354.27' S. OF N.E. COR. SEC. 8, T127N, R34W
TO: 1295.73' N. OF N.E. COR. SEC. 8, T127N, R34W

STATE PROJECT NO. 77-611-27

GROSS LENGTH	2,650.00	FEET	0.502	MILES
BRIDGES-LENGTH		FEET		MILES
EXCEPTIONS-LENGTH		FEET		MILES
NET LENGTH	2,650.00	FEET	0.502	MILES

LOCATED ON C.S.A.H. #2 FROM 513.5' WEST C.S.A.H. # 11 TO 1,100.0' EAST OF C.S.A.H. #11

FROM: 513.5' W. OF N.E. COR. SEC. 8, T127N, R34W
TO: 1,100' E. OF N.E. COR. SEC. 8, T127N, R34W

STATE PROJECT NO. 77-602-15

GROSS LENGTH	1,613.5	FEET	0.306	MILES
BRIDGES-LENGTH		FEET		MILES
EXCEPTIONS-LENGTH		FEET		MILES
NET LENGTH	1,613.5	FEET	0.306	MILES

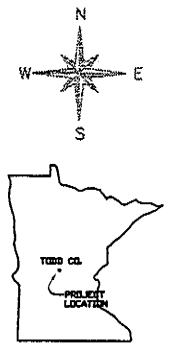

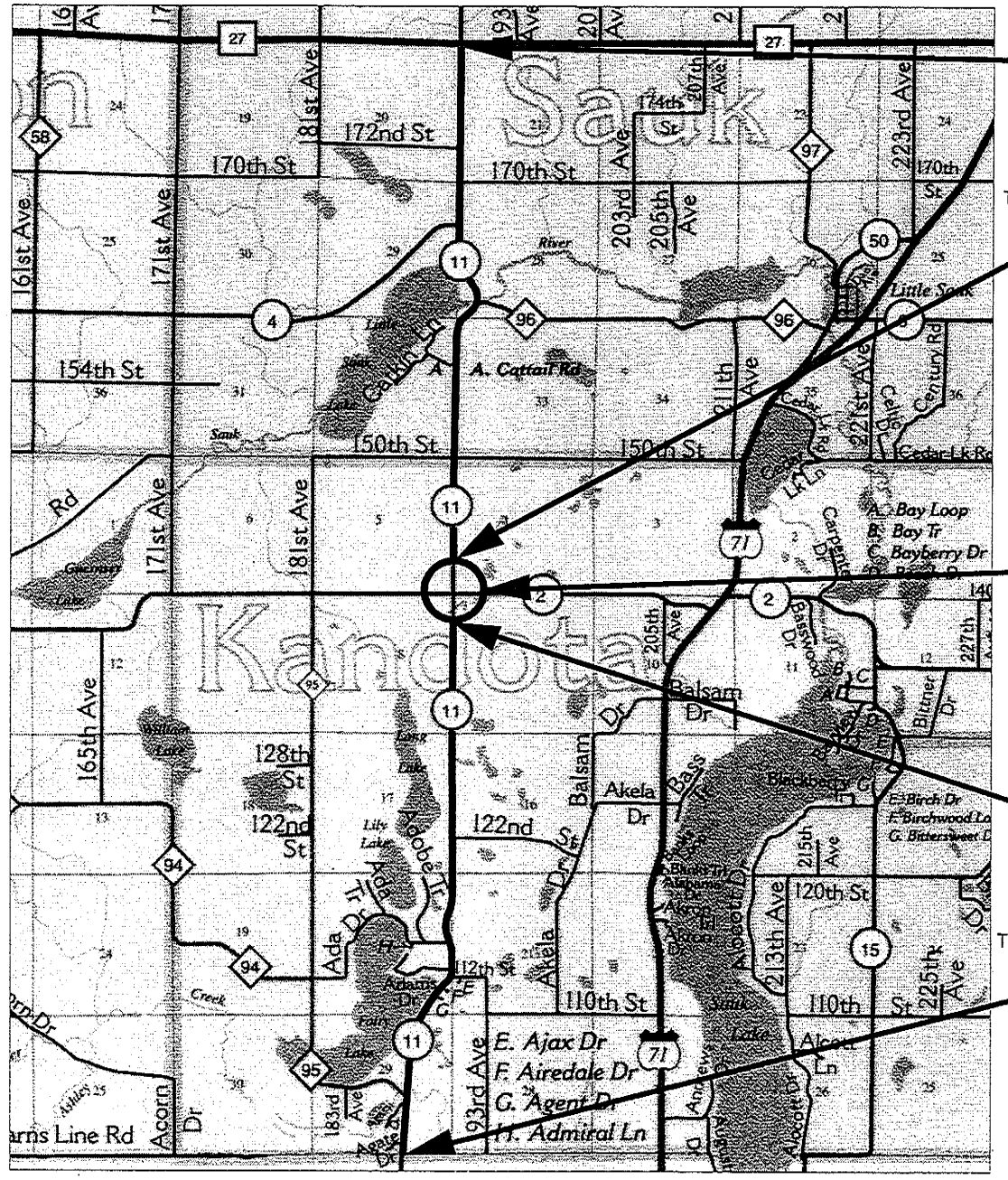

END S.P. NO. 77-611-31
STATION 429+95.31
SEGMENT 2

START S.P. NO. 77-611-31
SEGMENT 2
END S.P. NO. 77-611-27
STATION 230+00.00

START S.P. NO. 77-602-15
STATION 342+00

STATION EQUATION
347+13.5 = 0+00

END S.P. NO. 77-602-15
STATION 11+00

END S.P. NO. 77-611-31
SEGMENT 1
START S.P. NO. 77-611-27
STATION 203+50.00

START S.P. NO. 77-611-31
STATION 0+00.00
SEGMENT 1

INDEX MAP .....NOT TO SCALE

PARTIAL MAP TODD COUNTY

PLAN & PROFILE
0 50' 100'

CROSS-SECTIONS
0 10' 20'

MINN. PROJECT NO. **HSIP - STP 7703(068)**

GOVERNING SPECIFICATIONS

THE 2005 EDITION OF THE MINNESOTA DEPARTMENT OF TRANSPORTATION 'STANDARD SPECIFICATIONS FOR CONSTRUCTION' SHALL GOVERN.

INDEX OF SHEETS

SHEET NO.	DESCRIPTION
1	TITLE SHEET
2	ESTIMATED QUANTITIES
3	CENTERLINE PIPES
4	ENTRANCE PIPES
5-6	TYPICAL SECTIONS
7-8	SWPPP
9-11	TRAFFIC CONTROL
12-42	PLAN & PROFILE (11)
43-44	PLAN & PROFILE (2)
45-116	CROSS SECT. SHEETS (11)
117-118	CROSS SECT. SHEETS (2)
119	EXCAVATION TABULATION
C1 - C5	BOX CULVERT PLANS

THIS PLAN CONTAINS 124 SHEETS

DESIGN DESIGNATION

	CSAH #11 77-611-31	CSAH #11 77-611-27	CSAH #2 77-602-15
ADT (2007):	1545	1545	433
PROJ. ADT (2027):	2009	2009	563
PROJ. HCADT (2027):	201	201	56
R-VALUE	20	20	20
DESIGN TON:	10	10	10
REQUIRED G.E.:	16.50	16.50	11.50
PROPOSED G.E. (MIN.):	19.25	19.25	19.25
ESALS	2.1 x 10^5	2.1 x 10^5	5.9 x 10^4
SHOULDER WIDTH:	2 @ 6'	2 @ 6'	2 @ 6'
TRAFFIC LANES:	2 @ 12'	2 @ 12'	2 @ 12'
DESIGN SPEED:	45 MPH	45 MPH	45 MPH
FUNC. CLASS.:	MAJOR COLL.	MAJOR COLL.	MAJOR COLL.

SUPERELEVATIONS SHALL MEET STANDARDS
STOPPING SIGHT DISTANCE BASED ON:
3.5' HEIGHT OF EYE
2.0' HEIGHT OF OBJECT

I HEREBY CERTIFY THAT THIS PLAN WAS PREPARED BY ME OR UNDER MY DIRECT SUPERVISION AND THAT I AM A DULY LICENSED PROFESSIONAL ENGINEER UNDER THE LAWS OF THE STATE OF MINNESOTA.

LOREN L. FELLBAUM

ENGINEER: Loren Fellbaum LIC. NO. 43144
TODD COUNTY ENGINEER
DATE: 04-17-2007

Samuel D Wangan DATE: 5/1/07
STATE BRIDGE ENGINEER: RECOMMENDED FOR APPROVAL

Kristi Harrison DATE: 4/17/07
DISTRICT STATE AID ENGINEER: REVIEWED FOR COMPLIANCE WITH STATE-AID RULES/POLICY

Julie Stallman DATE: 5/8/07
STATE AID ENGINEER: APPROVED FOR STATE AID AND FEDERAL AID FUNDING

STATE PROJECT NO. 77-611-31 / 77-602-15 / 77-611-27 SHEET NO. 1 OF 124 SHEETS

PLAN SYMBOLS

ROAD AND RAILWAY

PROJECTED ROAD
PRIMITIVE ROAD
UNIMPROVED ROAD
GRADED AND DRAINED ROAD
SOIL SURFACE ROAD
GRAVEL OR STONE ROAD
BITUMINOUS ROAD
PAVED ROAD
DIVIDED ROAD
TRUNK HIGHWAY UNDER CONSTRUCTION
GRADE SEPARATION
FULL TRAFFIC INTERCHANGE

ROAD SYSTEM DESIGNATIONS

INTERSTATE TRUNK HIGHWAY (35)
U.S. NUMBERED TRUNK HIGHWAY (65)
STATE NUMBERED TRUNK HIGHWAY (18)
COUNTY STATE AID HIGHWAY (5)
COUNTY ROAD (12)
COUNTY STATE AID IN ADJOINING COUNTY (24)
TERMINATION OF DESIGNATED ROUTE (34)

RAILROAD:

RAILROAD STATION
GRADE CROSSING
UNDERPASS (HIGHWAY BELOW)
OVERPASS (HIGHWAY ABOVE)

STRUCTURES

General Symbols (over 20' span)

HIGHWAY BRIDGE
SMALL BRIDGES CLOSELY SPACED
DRAWBRIDGE

General Symbols (300' span and over)

GENERAL
DRAWBRIDGE

Other Structures

PEDESTRIAN BRIDGE
DAM WITH ROAD (LARGE SCALE)

BOUNDARIES

NATIONAL OR STATE
COUNTY
CIVIL TOWNSHIP
CONGRESSIONAL TOWNSHIP (U.S. LAND)
CORPORATE LINE
SECTION LINE

DRAINAGE

INTERMITTENT STREAM
NARROW STREAM
DRAINAGE DITCH
LAKE OR POND

PARK AND EASEMENT LIMIT

CITY CENTERS

STATE CAPITAL
COUNTY SEAT
CITY CENTER
INCORPORATED CITY (GENERALIZED)
UNINCORPORATED COMMUNITY

MISCELLANEOUS STRUCTURES

CHURCH, OTHER RELIGIOUS INSTITUTIONS
CEMETERY
CHURCH WITH CEMETERY ADJACENT
NATURAL GAS, PETROLEUM PRODUCTS, CRUDE OIL, OR WATER
GAUGING OR PUMPING STATION NATURAL GAS, PETROLEUM PRODUCTS, CRUDE OIL, OR WATER
PIPELINE, NATURAL GAS —NG—
PIPELINE, PETROLEUM PRODUCTS —PP—
PIPELINE, CRUDE OIL —CO—
PIPELINE, WATER —W—
TRANSMISSION LINE (33KV OR OVER) —T—T—T—

ESTIMATED QUANTITIES

ITEM NUMBER	NOTES	SPEC. NUMBER	ITEM	UNIT	ESTIMATED QUANTITIES SP 77-602-15	SP 77-611-27	SP 77-611-31	TOTAL
1		~~[illegible]~~	~~[illegible]~~	~~[illegible]~~				
2		2051.501	MAINTENANCE AND RESTORATION OF HAUL ROADS	LS			1	1
3		2101.501	CLEARING (P)	ACRE		0.70	13.85	14.55
4		2101.506	GRUBBING (P)	ACRE		0.70	13.85	14.55
5	(1)	2104.501	REMOVE CULVERT PIPE	LF	34	242	2,049	2,325
6		2104.505	REMOVE BITUMINOUS PAVEMENT (FULL DEPTH)	SY	2,134	7,067	5,669	14,870
7		2104.513	SAWING BITUMINOUS PAVEMENT (FULL DEPTH)	LF	96	48	204	348
8		2104.523	SALVAGE APRON	EACH			13	13
9		2105.501	COMMON EXCAVATION (P)	CY	4,867	14,808	10,796	30,471
10		2105.523	COMMON BORROW (LV)	CY		4,833	8,155	12,988
11		2105.523	COMMON BORROW (@ BOX CULVERT) (LV)	CY			5,468	5,468
12	(2)	2105.525	TOPSOIL BORROW YARDS (LV)	CY	10	10	50	70
13	(2)	2105.525	TOPSOIL BORROW SHOULDERING (LV)	CY			538	538
14	(9)	2105.604	STRUCTURAL GEOGRID (TYPE 1)	SY		2,467		2,467
15	(9)	2105.604	STRUCTURAL GEOGRID (TYPE 2)	SY		3,467		3,467
16		2120.607	EARTH SHOULDER MATERIAL	CY			93,500	93,500
17	(3)	2123.507	2.0 CY SHOVEL	HOUR	5	5	10	20
18	(3)	2123.509	DOZER	HOUR	4	4	32	40
19	(4)	2211.501	AGGREGATE BASE CL. 5 MOD.	TON	2,100	6,400	16,500	25,000
20	(4)	2221.501	AGGREGATE SHOULDERING CL. 1 MOD.	TON	150	360	5,890	6,400
21		2357.502	BITUMINOUS MATERIAL FOR TACK COAT	GAL	300	1,000	8,800	10,100
22	(5)	2357.606	BITUMINOUS MATERIAL FOR SHOULDER TACK	GAL	100	350	4,500	4,950
23	(4)	2360.501	TYPE SP 12.5 WEARING COURSE MIXTURE (2,B)	TON	460	960	12,480	13,900
24	(4)	2360.502	TYPE SP 12.5 NON-WEARING COURSE MIXTURE (2,B)	TON	630	2,230	9,740	12,600
25		2401.501	STRUCTURAL CONCRETE 1C62	CY			17	17
26		2412.511	16' X 8' PRECAST CONCRETE BOX CULVERT	LF			196	196
27		2412.512	16' X 8' PRECAST CONC. BOX CULVERT END SECTION	EACH			4	4
28		2442.501	REMOVE OLD BRIDGE	LS			1	1
29		2451.501	STRUCTURE EXCAVATION CLASS U	CY			5122	5122
30		2451.507	GRANULAR BEDDING (CV)	CY			376	376
31		2501.511	15" C.S. PIPE CULVERT	LF	50	40	2,450	2,540
32		2501.511	18" C.S. PIPE CULVERT	LF		100	368	468
33		2501.511	24" C.S. PIPE CULVERT	LF	50	40	238	328
34		2501.511	30" C.S. PIPE CULVERT	LF			64	64
35		2501.511	36" C.S. PIPE CULVERT	LF			4	4
36		2501.511	24" R.C. PIPE CULVERT CLASS 3	LF	54		54	108
37		2501.511	36" R.C. PIPE CULVERT CLASS 3	LF		84		84
38		2501.515	15" G.S. PIPE APRON	EACH	2	2	108	112
39		2501.515	18" G.S. PIPE APRON	EACH		4	21	25
40		2501.515	24" G.S. PIPE APRON	EACH		2	10	12
41		2501.515	30" G.S. PIPE APRON	EACH			2	2
42		2501.515	36" G.S. PIPE APRON	EACH			2	2
43		2501.515	24" R.C. PIPE APRON	EACH	2		2	4
44		2501.515	36" R.C. PIPE APRON	EACH		2		2
45		2501.521	36" SPAN C.S. PIPE ARCH CULVERT	LF			6	6
46		2501.521	42" SPAN C.S. PIPE-ARCH CULVERT	LF			28	28
47		2501.525	36" SPAN C.S. PIPE-ARCH APRON	EACH			2	2
48		2501.525	42" SPAN C.S. PIPE-ARCH APRON	EACH			2	2
49		2501.573	INSTALL SALVAGED APRON	EACH			13	13
50		2511.501	RANDOM RIPRAP, CLASS III (P)	CY			301	301
51		2554.501	TRAFFIC BARRIER, DESIGN 8330	LF			600	600
52		2554.521	ANCHORAGE ASSEMBLY - CABLE	EACH			2	2
53	(6)	2563.601	TRAFFIC CONTROL	LS	0.1	0.1	0.8	1
54		2573.502	SILT FENCE, TYPE MACHINE SLICED	LF	600	1,800	6,350	8,750
55		2573.505	FLOTATION SILT CURTAIN TYPE MOVING WATER	LF			80	80
56		2573.512	TEMPOPARY DITCH CHECK TYPE 1	LF	45	135	960	1,140
57		2573.550	EROSION CONTROL SUPERVISOR	LS	0.1	0.1	0.8	1
58		2575.501	SEEDING (P)	ACRE	1.5	6.0	58.1	65.6
59		2575.502	SEED, MIXTURE 240	LBS	120	450	4,360	4930
60	(7)	2575.502	SEED, MIXTURE 270	LBS	50	20	548	618
61		2575.511	MULCH MATERIAL, TYPE 1	TON	3	12	116	131
62		2575.519	DISK ANCHORING (P)	ACRE	1.1	5.8	53.6	60.5
63		2575.523	EROSION CONTROL BLANKETS, STRAW RD 1S	SY	284	1,632	18,325	20,242
64	(8)	2575.532	FERTILIZER TYPE 1	LBS	450	1800	17,450	19,700
65		2575.560	HYDRAULIC SOIL STABILIZER, TYPE 8	LBS	1,470	595	15,995	18,060
66		2582.502	LINEAR MARKINGS 4" WIDTH LATEX SOLID WHITE	LF	3,124	5,220	81,685	90,029
67		2582.502	LINEAR MARKINGS 4" WIDTH LATEX SOLID YELLOW	LF	2,458	2,249	37,531	42,238
68		2582.502	LINEAR MARKINGS 4" WIDTH LATEX BROKEN WHITE	LF		160	100	260
69		2582.502	LINEAR MARKINGS 4" WIDTH LATEX BROKEN YELLOW	LF	130	490	6,230	6,850

REMOVE BITUMINOUS

STATIONING	SY	PROJECT
26+80	67	77-611-31
48+50	67	77-611-31
135+50	67	77-611-31
203+50 - 230+00	7,067	77-611-27
342+00 - 3+00	1,867	77-602-15
9+50 - 10+50	267	77-602-15
325+00 - 336+00	2,934	77-611-31
362+00 - 370+50	2,267	77-611-31
399+21 - 400+21	267	77-611-31
TOTAL	14,870	

SAWING BITUMINOUS

STATIONING	LT	RT	ROAD
26+80		20'	11
48+50		20'	11
135+50	20'		11
203+50	12'	12'	11
342+00	12'	12'	2
3+00	12'	12'	2
9+50	12'	12'	2
10+50	12'	12'	2
230+00	12'	12'	11
325+00	12'	12'	11
336+00	12'	12'	11
362+00	12'	12'	11
370+50	12'	12'	11
399+21	12'	12'	11
400+21	12'	12'	11
TOTAL	348'		

CONSTRUCTION NOTES:

(1) LENGTH INCLUDES APRONS
(2) TO BE PLACED IN YARDS IF NEEDED AS DETERMINED BY THE ENGINEER
(3) SOME HOURS TO BE USED TO SHAPE DITCHES IN MISC. SPOTS AS DIRECTED BY THE ENGINEER
(4) QUANTITY INCLUDES ADDITIONAL 15% FOR STRENGTHENING & APPROACHES
(5) SHOULDER TACK TO BE PLACED ON UPPER 3' OF INSLOPE
(6) TRAFFIC CONTROL - SEE PLAN SHEETS & SPECIAL PROVISIONS
(7) SEED MIXTURE #270 WILL BE USED UNDER HYDRAULIC SOIL STABILIZER LOCATIONS ONLY
(8) COMMERICAL FERTILIZER, ANALYSIS 24-12-24
(9) SEE SPECIAL PROVISIONS
TEMPORARY LANE MARKINGS - SEE SPECIAL PROVISIONS

STANDARD PLATES

THE FOLLOWING STANDARD PLATES, APPROVED BY THE FEDERAL HIGHWAY ADMINISTRATION SHALL APPLY ON THIS PROJECT

PLATE NO.	DESCRIPTION
3000L	REINFORCED CONCRETE PIPE
3040F	CORRUGATED METAL PIPE CULVERT
3100G	CONCRETE APRON FOR REINFORCED CONCRETE PIPE
3122K	METAL APRON FOR C.M. PIPE-ARCH CULVERT
3123J	METAL APRON FOR C.S. PIPE
3124B	METAL APRON CONNECTION
3133C	RIPRAP AT RCP OUTLETS
3145F	CONCRETE PIPE TIES
3221C	STEEL COUPLING BAND
8000I	STANDARD BARRICADES
8330G	3-CABLE GUARDRAIL (WOOD POSTS)
8333B	3-CABLE GUARDRAIL ANCHOR
9000D	APPROACHES & ENTRANCES
9102D	TURF ESTABLISHMENT AREAS (AT PIPE CULVERT ENDS)

BASIS FOR PLANNED QUANTITIES

AGGREGATE BASE DENSITY	105 LBS./SQ. YD./INCH
BITUMINOUS MIXTURE DENSITY	110 LBS./SQ. YD./INCH
BITUMINOUS MATERIAL FOR TACK COAT	0.20 GAL./SQ. YD.
MULCH MATERIAL TYPE 1	2 TONS/ACRE
SHOULDER TACK	0.18 GAL./SQ. YD.
SEED MIXTURE 240	75 LBS./ACRE
SEED MIXTURE 270	120 LBS./ACRE
FERTILIZER TYPE 1	300 LBS./ACRE
HYDRAULIC SOIL STABILIZER (TYPE 8)	3500 LBS./ACRE

(P) PLANNED QUANTITY
(CV) COMPACTED VOLUME
(LV) LOOSE VOLUME

LINEAR MARKING WHITE

STATIONING	TYPE	PAY LENGTH
77-602-15		
342+00 - 346+78	SOLID	974'
0+25 - 11+00	SOLID	2,150'
SUB-TOTAL SOLID		3,124'
SUB-TOTAL BROKEN		0'
77-611-27		
203+50 - 216+84	SOLID	2,668'
213+80 - 216+84	BROKEN	60'
216+30 - 216+84	BROKEN	20'
217+24 - 217+80	BROKEN	20'
217+24 - 220+30	BROKEN	60'
217+24 - 230+00	SOLID	2,552'
SUB-TOTAL SOLID		5,220'
SUB-TOTAL BROKEN		160'
77-611-31		
0+00 - 203+50	SOLID	40,700'
20+59 - 21-69	BROKEN	20'
21+74 - 25+19	SOLID	345'
230+00 - 429+95	SOLID	39,990'
325+95 - 328+70	SOLID	275'
328+95 - 331+00	BROKEN	40'
359+77 - 361+27	BROKEN	40'
360+52 - 364+27	SOLID	375'
SUB-TOTAL SOLID		81,685'
SUB-TOTAL BROKEN		100'
GRAND TOTAL SOLID		90,029'
GRAND TOTAL BROKEN		260'

LINEAR MARKING YELLOW

STATIONING	TYPE	PAY LENGTH
77-602-15		
342+00 - 346+78	SOLID	974'
0+25 - 4+34	SOLID	818'
4+34 - 11+00	SOLID	666'
4+34 - 11+00	BROKEN	130'
SUB-TOTAL SOLID		2,458'
SUB-TOTAL BROKEN		130'
77-611-27		
203+50 - 205+13	SOLID	163'
203+50 - 205+13	BROKEN	30'
205+13 - 210+15	BROKEN	100'
210+15 - 217+49	SOLID	734'
210+15 - 217+49	BROKEN	150'
217+49 - 219+75	SOLID	452'
219+75 - 228+75	SOLID	900'
219+75 - 228+75	BROKEN	180'
228+75 - 230+00	BROKEN	30'
SUB-TOTAL SOLID		2,249'
SUB-TOTAL BROKEN		490'
77-611-31		
0+00 - 6+18	SOLID	618'
0+00 - 6+18	BROKEN	120'
6+18 - 8+53	BROKEN	50'
8+53 - 15+14	SOLID	661'
8+53 - 15+14	BROKEN	130'
15+14 - 17+60	BROKEN	50'
17+60 - 26+38	SOLID	878'
17+60 - 26+38	BROKEN	180'
26+83 - 46+13	SOLID	3,860'
46+13 - 67+04	SOLID	2,091'
46+13 - 67+04	BROKEN	420'
67+04 - 91+80	SOLID	4,952'
91+80 - 102+25	SOLID	1,045'
91+80 - 102+25	BROKEN	210'
102+25 - 110+50	BROKEN	170'
110+50 - 119+66	SOLID	916'
110+50 - 119+66	BROKEN	180'
120+50 - 128+50	SOLID	800'
120+50 - 128+50	BROKEN	160'
128+50 - 134+28	BROKEN	580'
134+28 - 141+32	SOLID	704'
134+28 - 141+32	BROKEN	140'
141+32 - 143+18	SOLID	372'
143+18 - 151+69	SOLID	851'
143+18 - 151+69	BROKEN	170'
151+69 - 167+09	BROKEN	310'
167+09 - 172+82	SOLID	573'
167+09 - 172+82	BROKEN	120'
172+82 - 175+45	BROKEN	50'
175+45 - 182+97	SOLID	752'
175+45 - 182+97	BROKEN	150'
182+97 - 185+27	BROKEN	50'
185+27 - 195+39	SOLID	1,012'
185+27 - 195+39	BROKEN	200'
195+39 - 196+70	SOLID	262'
196+70 - 203+50	SOLID	680'
196+70 - 203+50	BROKEN	140'
230+00 - 300+13	BROKEN	1,400'
300+13 - 309+35	SOLID	922'
300+13 - 309+35	BROKEN	180'
309+35 - 376+96	SOLID	13,522'
376+96 - 386+30	SOLID	934'
376+96 - 386+30	BROKEN	190'
386+30 - 420+55	BROKEN	690'
420+22 - 429+80	SOLID	958'
420+22 - 429+80	BROKEN	190'
SUB-TOTAL SOLID		37,531'
SUB-TOTAL BROKEN		6,230'
GRAND TOTAL SOLID		42,238'
GRAND TOTAL BROKEN		6,850'

CLEARING & GRUBBING

STATIONING	LT	RT	FROM	TO	ACRES
S.P. 77-611-31					
22+60 - 23+70		*	26'	56'	0.15
27+00 - 30+80		*	38'	50'	0.30
30+20 - 32+50	*		34'	70'	0.30
37+22	*		37'	37'	0.05
39+10 - 41+50		*	36'	50'	0.20
41+50 - 43+00		*	36'	70'	0.20
43+00 - 45+40		*	36'	50'	0.20
42+00 - 44+70	*		40'	50'	0.20
47+10 - 51+80	*		32'	50'	0.45
52+65 - 54+70		*	27'	32'	0.15
56+50	*		25'	25'	0.05
58+09	*		36'	36'	0.05
58+65	*		35'	35'	0.05
65+00 - 67+60	*		35'	50'	0.25
67+60 - 73+60	*		35'	90'	1.10
69+00 - 71+15		*	35'	50'	0.20
71+80 - 73+60		*	35'	50'	0.15
74+10 - 75+70	*		38'	50'	0.15
74+75 - 75+75		*	40'	50'	0.10
75+90 - 77+90	*		35'	50'	0.20
77+05 - 77+65		*	51'	70'	0.10
88+50		*	45'	45'	0.05
89+30 - 89+70		*	39'	50'	0.05
89+80 - 93+00	*		39'	80'	0.50
94+50 - 97+50		*	42'	90'	0.50
97+50 - 98+00		*	42'	55'	0.05
109+60		*	39'	39'	0.05
112+60 - 119+00	*		35'	60'	0.70
123+50 - 125+00	*		35'	75'	0.25
131+00 - 133+50	*		33'	50'	0.25
133+50 - 138+40	*		33'	45'	0.40
146+46	*		36'	36'	0.05
149+80	*		40'	40'	0.05
155+25 - 156+60	*		36'	60'	0.15
170+00 - 170+40	*		30'	50'	0.05
194+90	*		34'	34'	0.05
199+70 - 204+50	*		32'	42'	0.35
236+00 - 239+70	*		46'	50'	0.20
244+00 - 245+00		*	44'	50'	0.10
248+90 - 250+30	*		36'	50'	0.15
254+80 - 256+20		*	38'	55'	0.15
276+50 - 277+80		*	37'	50'	0.10
285+85 - 286+10	*		45'	50'	0.05
290+25		*	43'	43'	0.05
294+30 - 294+65	*		44'	50'	0.05
300+70	*		46'	46'	0.05
312+60 - 316+50	*		42'	50'	0.25
317+50 - 318+50	*		55'	80'	0.15
325+00 - 329+80	*		50'	80'	0.60
314+05 - 317+50		*	44'	50'	0.25
324+00 - 325+50		*	50'	60'	0.10
325+50 - 328+60		*	50'	80'	0.40
331+85 - 332+50	*		45'	50'	0.05
341+50 - 342+50	*		50'	60'	0.10
342+50 - 346+50	*		50'	80'	0.50
346+50 - 348+70	*		50'	120'	0.50
351+30		*	43'	43'	0.05
352+30 - 357+50	*		46'	50'	0.30
357+50 - 360+10	*		46'	80'	0.35
352+30 - 355+50		*	47'	50'	0.20
358+40 - 361+00		*	50'	60'	0.20
362+43		*	49'	49'	0.05
362+80 - 364+50	*		49'	100'	0.30
364+50 - 367+50	*		49'	90'	0.45
363+79		*	78'	78'	0.05
			SUB-TOTAL		13.85
S.P. 77-611-27					
211+84 - 212+50	*		40'	70'	0.10
212+50 - 215+00	*		40'	60'	0.25
212+95		*	67'	67'	0.05
213+35 - 216+30		*	63'	85'	0.30
			SUB-TOTAL		0.70
			GRAND TOTAL		14.55

CERTIFIED BY: [signature] LIC. NO. 43144 DATE: 04-20-2007

CENTERLINE PIPE QUANTITIES

CENTERLINE EXTENSION CULVERT REQUIREMENTS

	LOCATION		FURNISH & INSTALL C.S. PIPE DIAMETER & LENGTH OF BARREL								
STATION	LT	RT	15"	18"	24"	30"	36"	36" SPAN	42" SPAN	REMOVE	REMARKS
22+87	*			18'							F&I APRON
22+87		*		24'							F&I APRON
28+07	*			4'							F&I APRON
28+07		*		8'							F&I APRON
50+66	*										F&I APRON
50+66		*		6'							F&I APRON
70+57	*								28'		F&I APRON
70+57		*									F&I APRON
76+20	*			8'						2'	F&I APRON
76+20		*		12'						2'	F&I APRON
110+05	*			10'						2'	F&I APRON
110+05		*		6'							F&I APRON
124+98	*			6'							F&I APRON
124+98		*		4'							F&I APRON
134+78	*										F&I APRON
134+78		*					4'				F&I APRON
164+85	*							6'		2'	F&I APRON
164+85		*									F&I APRON
184+45	*										F&I APRON
184+45		*			4'						F&I APRON
206+63	*									25'	
206+63		*								25'	
225+38	*									32'	
225+38		*								32'	
235+54	*				6'						S&I APRON
235+54		*			10'						S&I APRON
250+99	*			6'							S&I APRON
250+99		*		6'							S&I APRON
269+29	*										S&I APRON
300+33	*				10'						S&I APRON
300+33		*			6'						S&I APRON
329+50	*					16'					S&I APRON (CR 96)
329+50		*				20'					S&I APRON (CR 96)
342+95	*					20'					S&I APRON
342+95		*				8'					S&I APRON
358+84	*				6'						S&I APRON
358+84		*			16'						S&I APRON
10+00	*	*			50'						F&I APRONS (CSAH 2)

CENTERLINE CULVERT REQUIREMENTS

	LOCATION		FURNISH & INSTALL R.C. PIPE DIAMETER & LENGTH OF BARREL			
STATION	LT	RT	24"	36"	REMOVE	REMARKS
205+50	*			42'		F&I APRON (CSAH 11)
205+50		*		42'		F&I APRON (CSAH 11)
399+71	*		26'		32.5'	F&I APRON (CSAH 11)
399+71		*	28'		32.5'	F&I APRON (CSAH 11)
0+75	*		28'			F&I APRON (CSAH 2)
0+75		*	26'			F&I APRON (CSAH 2)

CENTERLINE PIPE REPLACEMENT/ REMOVAL SECTION

CENTERLINE PROFILE CSAH #11 & CSAH #2

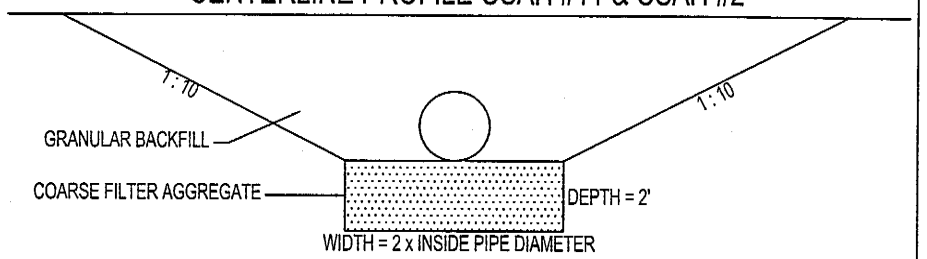

PROPOSED CONSTRUCTION

STATION 205+50 (CSAH 11)
STATION 206+63 (CSAH 11)
STATION 225+83 (CSAH 11)
STATION 368+30 (CSAH 11)
STATION 399+71 (CSAH 11)
STATION 0+75 (CSAH 2)
STATION 10+00 (CSAH 2)

TURN LANE / BY-PASS LANE
PROPOSED CONSTRUCTION

STATION 21+94 (CR #95)
STATION 329+20 (CR #96)
STATION 361+02 (CSAH #4)

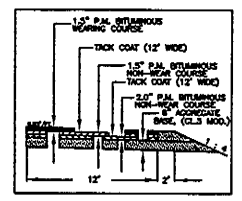

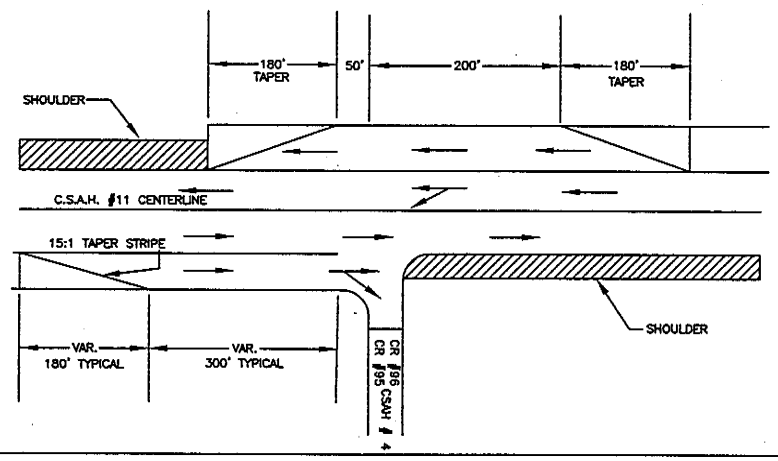

TURN LANE / BY-PASS LANE
PROPOSED CONSTRUCTION

STATION 217+05 (CSAH #2)

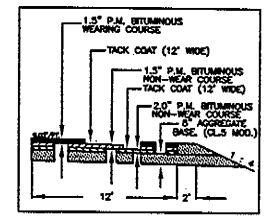

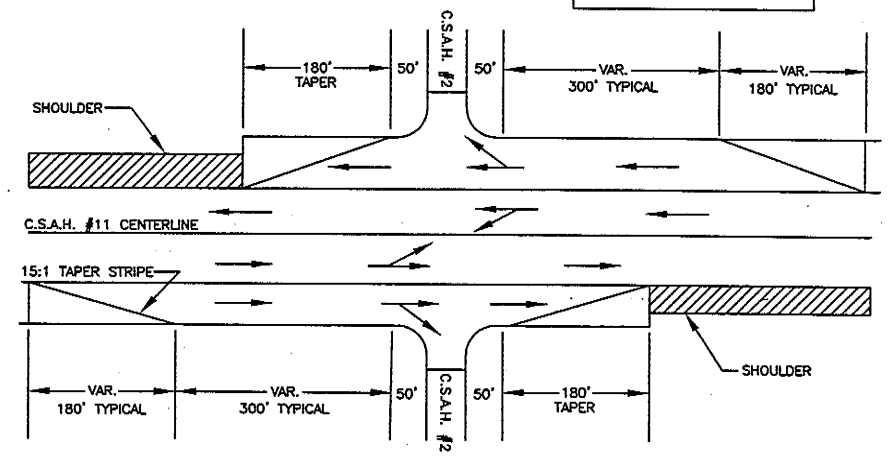

ALL UTILITY POLES AND OTHER UNYIELDING OBJECTS SHALL BE REMOVED AND RELOCATED OUTSIDE THE RECOVERY AREA BY THE UTILITY COMPANY.

CERTIFIED BY: Lou Fellbaum LIC. NO. 43144 DATE: 04-04-2007

ENTRANCE PIPE QUANTITIES

ENTRANCE CULVERT REQUIREMENTS

	LOCATION		FURNISH & INSTALL C.S. PIPE * DIAMETER & LENGTH OF BARREL					
STATION	LT.	RT.	15"	18"	24"	DRY	REMOVE	REMARKS
20+70		*				*		
22+00	*					*		CTY RD 95
24+95		*				*		
26+80		*	50'				30	
31+70		*	50'				30	
33+65		*	50'				30	
35+00	*					*		
37+10		*				*		
38+60		*	50'				44	
45+05	*					*		
46+10	*					*		
47+05	*					*		
48+50		*	50'				30	
49+15		*	50'				36	
56+10		*				*		
56+75	*					*		
	*							
58+40						*		
59+40		*	50'				32'	
62+60		*	60'				34'	AGENT DRIVE
66+75		*				*		AIREDALE DRIVE
71+50		*				*		112TH STREET
73+75	*					*		ADAMS DRIVE
75+75	*					*		
78+50	*		50'				42'	
78+55		*	50'				30'	
80+60		*	50'				34'	
84+50	*		60'				34'	ADA DRIVE
85+50		*				*		
87+70	*					*		
88+80		*	50'				30'	
96+90	*					*		
100+80		*				*		
102+40		*				*		
109+45		*	40'				40'	
111+15	*		40'				32'	
115+70	*					*		

ENTRANCE CULVERT REQUIREMENTS

	LOCATION		FURNISH & INSTALL C.S. PIPE * DIAMETER & LENGTH OF BARREL					
STATION	LT.	RT.	15"	18"	24"	DRY	REMOVE	REMARKS
124+40		*				*		122ND STREET
129+10	*					*		
129+10		*	40'				30'	
135+50	*		50'				30'	
144+10		*				*		
149+00	*		50'				30'	
150+70		*	40'				32'	
152+10		*	50'				46'	
154+30	*					*		
160+05		*			40'		30'	
163+20	*							TO REMAIN
163+20		*				*		
164+10	*					*		
173+50		*	40'				20'	
177+55	*					*		
177+60		*	50'				30'	
187+20		*				*		
194+80	*		50'				30'	
213+10	*					*		
214+10		*			40'		28'	
221+00	*		40'				35'	
226+30		*		60'			35'	
227+80		*		40'			30'	
234+85	*					*		
240+90	*		50'				34'	
242+30		*	50'				30'	
249+20		*				*		
252+20		*				*		
252+40	*					*		
253+30		*				*		
256+80	*		40'				34'	
256+90		*	40'				34'	
267+49		*	40'				34'	
268+69	*					*		210TH STREET
268+69		*				*		210TH STREET
272+60		*	50'		60'		34'	

ENTRANCE CULVERT REQUIREMENTS

	LOCATION		FURNISH & INSTALL C.S. PIPE * DIAMETER & LENGTH OF BARREL					
STATION	LT.	RT.	15"	18"	24"	DRY	REMOVE	REMARKS
277+95	*		40'				34'	
284+20	*		60'				34'	
286+40		*				*		
292+62	*		40'				34'	
294+25		*	40'				34'	
294+68	*		40'				34'	
294+80		*	40'				34'	
300+80	*					*		
303+70	*					*		CATTAIL ROAD
306+70	*		40'				34'	
308+00		*				*		
310+75		*	40'				34'	
311+85		*	60'				34'	
322+20	*		50'				34'	
329+30		*				*		CTY RD 96
333+25		*	50'				34'	
333+40	*		60'				34'	
339+05		*				*		
343+25		*			50'		32'	
344+70	*					*		
346+90		*		50'			46'	
353+30	*		50'				30'	
361+02	*							CSAH 4
361+05		*			50'		34'	
366+10		*			40'			
370+10	*			50'			46'	
372+10		*		50'			34'	
373+55	*			40'			22'	
376+85	*		40'				34'	-
376+99		*	60'				48'	170TH STREET
378+70		*				*		
380+85	*		50'				34'	
384+50		*	60'				30'	
390+20	*			60'			48'	172ND STREET
410+25	*		40'				34'	
410+80		*	50'				34'	
413+10	*					*		
420+37	*		50'				34'	
422+30		*	40'				34'	
427+05		*	60'				42'	
345+00		*	50'				34'	CSAH 2

*** ALL NEW ENTRANCE PIPES REQUIRE G.S. APRONS**

CERTIFIED BY: Soren Tellbom LIC. NO. 43144 DATE: 04-04-2007

TYPICAL SECTIONS

PRESENT CONSTRUCTION (12' PAVED DRIVING LANE)

STA. 0+00.00 TO 21+58

GRADED, AGG. BASE AND PAVED SURFACE IN 1980 UNDER S.A.P. 77-611-19
9.00" AGG. BASE (MIN.)
1.50" P.M. BIT. SURFACE
1.50" P.M. BIT. OVERLAY

STA. 21+58 TO 221+84

GRADED, AGGREGATE BASE IN 1952 UNDER S.P. 77-504-01
R.M. BITUMINOUS OVERLAY IN 1960 UNDER S.A.P. 77-611-07
6.00" AGG. BASE (MIN.)
1.55" R.M. BIT. SURFACE
1.5" P.M. BIT. OVERLAY
1.0" P.M. BIT. OVERLAY

STA. 221+84 TO 228+00

GRADED, AGGREGATE BASE IN 1961 UNDER S.A.P. 77-611-09
R.M. BITUMINOUS OVERLAY IN 1967 UNDER S.A.P. 77-611-14
6.00" AGG. BASE (MIN.)
1.55" R.M. BIT. SURFACE
1.5" P.M. BIT. OVERLAY
1.0" P.M. BIT. OVERLAY

STA. 228+00 TO 325+00

GRADED, AGGREGATE BASE IN 1961 UNDER S.A.P. 77-611-09
R.M. BITUMINOUS OVERLAY IN 1967 UNDER S.A.P. 77-611-14
P.M. BITUMINOUS OVERLAY IN 2003 UNDER C.P. 77-03-1
6.00" AGG. BASE (MIN.)
1.55" R.M. BIT. SURFACE
1.5" P.M. BIT. OVERLAY
1.0" P.M. BIT. OVERLAY
1.5" P.M. BIT. OVERLAY

STA. 325+00 TO 370+50

GRADED, AGGREGATE BASE IN 1961 UNDER S.A.P. 77-611-09
R.M. BITUMINOUS OVERLAY IN 1967 UNDER S.A.P. 77-611-14
6.00" AGG. BASE (MIN.)
1.55" R.M. BIT. SURFACE
1.5" P.M. BIT. OVERLAY
1.0" P.M. BIT. OVERLAY

STA. 370+50 TO 429+95.31

GRADED, AGGREGATE BASE IN 1961 UNDER S.A.P. 77-611-09
R.M. BITUMINOUS OVERLAY IN 1967 UNDER S.A.P. 77-611-14
P.M. BITUMINOUS OVERLAY IN 2003 UNDER C.P. 77-03-1
6.00" AGG. BASE (MIN.)
1.55" R.M. BIT. SURFACE
1.5" P.M. BIT. OVERLAY
1.0" P.M. BIT. OVERLAY
1.5" P.M. BIT. OVERLAY

BITUMINOUS OVERLAY

STATION 0+00.00 TO STATION 21+58 (CSAH 11)
RECOVERY AREA 42' FROM CENTERLINE
R/W CORRIDOR IS 100' (MINIMUM)

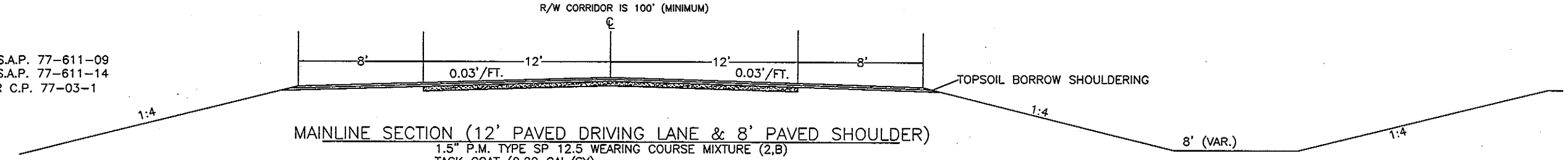

MAINLINE SECTION (12' PAVED DRIVING LANE & 8' PAVED SHOULDER)

1.5" P.M. TYPE SP 12.5 WEARING COURSE MIXTURE (2,B)
TACK COAT (0.20 GAL/SY)
1.5" P.M. TYPE SP 12.5 NON-WEAR COURSE MIXTURE (2,B)
TACK COAT (0.20 GAL/SY)

SHOULDER WIDENING & BITUMINOUS OVERLAY

STATION 21+58.00 TO STATION 203+50.00 (CSAH 11)
STATION 336+00.00 TO STATION 362+00 (CSAH 11)
RECOVERY AREA 42' FROM CENTERLINE
R/W CORRIDOR IS 100' (MINMIUM)
EXISTING CROSS SLOPE IS 2.0% FROM STATION 67+26 TO STATION 86+04
EXISTING CROSS SLOPE IS 1.8% FROM STATION 86+04 TO STATION 93+64

SHOULDER SECTION (6' PAVED)

STATION 321+50 – 333+50 LT.
STATION 311+50 – 325+45 RT.

SHOULDER SECTION (4' AGGREGATE SHOULDER)

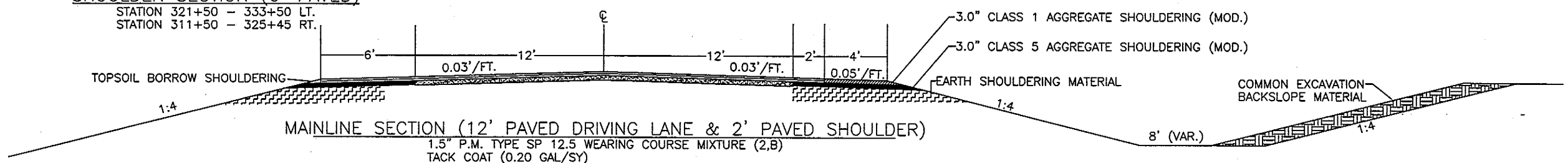

MAINLINE SECTION (12' PAVED DRIVING LANE & 2' PAVED SHOULDER)

1.5" P.M. TYPE SP 12.5 WEARING COURSE MIXTURE (2,B)
TACK COAT (0.20 GAL/SY)
1.5" P.M. TYPE SP 12.5 NON-WEAR COURSE MIXTURE (2,B)
TACK COAT (0.20 GAL/SY)

ALL APPROACH SLOPES MUST BE CONSTRUCTED 1:4 OR FLATTER. FROM MINNESOTA RULES 2003, CHAPTER 8820.9920 (GEOMETRIC DESIGN STANDARDS; RURAL AND SUBURBAN UNDIVIDED; NEW OR OR RECONSTRUCTION PROJECTS)

THE SUBSURFACE UTILITY INFORMATION IN THIS PLAN IS UTILITY QUALITY LEVEL D. THIS QUALITY LEVEL WAS DETERMINED ACCORDING TO THE GUIDELINES OF CI/ASCE 38-02, ENTITLED "STANDARD GUIDELINES FOR THE COLLECTION AND DEPICTION OF EXISTING SUBSURFACE UTILITY DATA."

CERTIFIED BY: Loren Zeller LIC. NO. 43144 DATE: 04-04-2007

ALL UTILITY POLES AND OTHER UNYIELDING OBJECTS SHALL BE REMOVED AND RELOCATED OUTSIDE THE RECOVERY AREA BY THE UTILITY COMPANY.

TYPICAL SECTIONS

PRESENT CONSTRUCTION (12' PAVED DRIVING LANE)

STA. 0+00.00 TO 21+58

GRADED, AGG. BASE AND PAVED SURFACE IN 1980 UNDER S.A.P. 77-611-19
9.00" AGG. BASE (MIN.)
1.50" P.M. BIT. SURFACE
1.50" P.M. BIT. OVERLAY

STA. 21+58 TO 221+84

GRADED, AGGREGATE BASE IN 1952 UNDER S.P. 77-504-01
R.M. BITUMINOUS OVERLAY IN 1960 UNDER S.A.P. 77-611-07
6.00" AGG. BASE (MIN.)
1.55" R.M. BIT. SURFACE
1.5" P.M. BIT. OVERLAY
1.0" P.M. BIT. OVERLAY

STA. 221+84 TO 228+00

GRADED, AGGREGATE BASE IN 1961 UNDER S.A.P. 77-611-09
R.M. BITUMINOUS OVERLAY IN 1967 UNDER S.A.P. 77-611-14
6.00" AGG. BASE (MIN.)
1.55" R.M. BIT. SURFACE
1.5" P.M. BIT. OVERLAY
1.0" P.M. BIT. OVERLAY

STA. 228+00 TO 325+00

GRADED, AGGREGATE BASE IN 1961 UNDER S.A.P. 77-611-09
R.M. BITUMINOUS OVERLAY IN 1967 UNDER S.A.P. 77-611-14
P.M. BITUMINOUS OVERLAY IN 2003 UNDER C.P. 77-03-1
6.00" AGG. BASE (MIN.)
1.55" R.M. BIT. SURFACE
1.5" P.M. BIT. OVERLAY
1.0" P.M. BIT. OVERLAY
1.5" P.M. BIT. OVERLAY

STA. 325+00 TO 370+50

GRADED, AGGREGATE BASE IN 1961 UNDER S.A.P. 77-611-09
R.M. BITUMINOUS OVERLAY IN 1967 UNDER S.A.P. 77-611-14
6.00" AGG. BASE (MIN.)
1.55" R.M. BIT. SURFACE
1.5" P.M. BIT. OVERLAY
1.0" P.M. BIT. OVERLAY

STA. 370+50 TO 429+95.31

GRADED, AGGREGATE BASE IN 1961 UNDER S.A.P. 77-611-09
R.M. BITUMINOUS OVERLAY IN 1967 UNDER S.A.P. 77-611-14
P.M. BITUMINOUS OVERLAY IN 2003 UNDER C.P. 77-03-1
6.00" AGG. BASE (MIN.)
1.55" R.M. BIT. SURFACE
1.5" P.M. BIT. OVERLAY
1.0" P.M. BIT. OVERLAY
1.5" P.M. BIT. OVERLAY

GRADE CORRECTION AREAS

STATION 203+50 TO STATION 230+00 (CSAH 11)
STATION 325+00 TO STATION 336+00 (CSAH 11)
STATION 362+00 TO STATION 370+50 (CSAH 11)
STATION 342+00 TO STATION 3+50 (CSAH 2)

CENTERLINE PIPE REPLACEMENT AREAS

STATION 399+71 (CSAH 11) STATION 10+00 (CSAH 2)
RECOVERY AREA 42' FROM CENTERLINE (TYP.)
R/W CORRIDOR IS 100' (MINIMUM)

SHOULDER SECTION (6' PAVED)

STATION 321+50 – 333+50 LT.
STATION 311+50 – 325+45 RT.

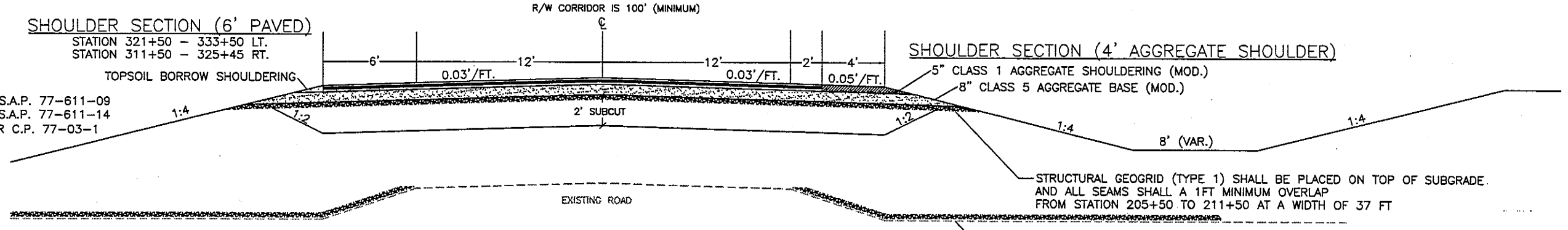

SHOULDER SECTION (4' AGGREGATE SHOULDER)

5" CLASS 1 AGGREGATE SHOULDERING (MOD.)
8" CLASS 5 AGGREGATE BASE (MOD.)

STRUCTURAL GEOGRID (TYPE 1) SHALL BE PLACED ON TOP OF SUBGRADE AND ALL SEAMS SHALL A 1FT MINIMUM OVERLAP FROM STATION 205+50 TO 211+50 AT A WIDTH OF 37 FT

STRUCTURAL GEOGRID (TYPE 2) SHALL BE PLACED ON TOP OF EXISTING GROUND AND SHALL BE PLACED BETWEEN EXISTING SHOULDER PI AND THE TOE OF NEW SLOPE ALL SEAMS SHALL HAVE A 2FT MINIMUM OVERLAP FROM STATION 205+50 TO 211+50 AT A WIDTH OF 26 FT PER SIDE

MAINLINE SECTION (12' PAVED DRIVING LANE & 2' PAVED SHOULDER)

1.5" P.M. TYPE SP 12.5 WEARING COURSE MIXTURE (2,B)
TACK COAT (0.20 GAL/SY)
1.5" P.M. TYPE SP 12.5 NON-WEAR COURSE MIXTURE (2,B)
TACK COAT (0.20 GAL/SY)
2" P.M. TYPE SP 12.5 NON-WEAR COURSE MIXTURE (2,B)
8" CLASS 5 AGGREGATE BASE (MOD.)

SHOULDER WIDENING & BITUMINOUS OVERLAY

STATION 230+00.00 TO STATION 325+00.00 (CSAH 11)
STATION 370+50.00 TO STATION 429+95.31 (CSAH 11)
RECOVERY AREA 42' FROM CENTERLINE
R/W CORRIDOR IS 100' (MINIMUM)

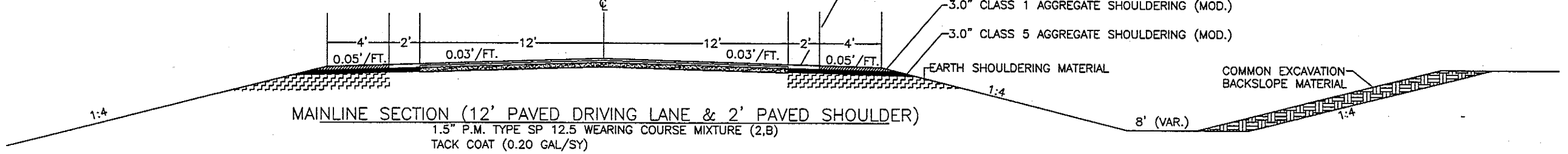

MAINLINE SECTION (12' PAVED DRIVING LANE & 2' PAVED SHOULDER)

1.5" P.M. TYPE SP 12.5 WEARING COURSE MIXTURE (2,B)
TACK COAT (0.20 GAL/SY)

ALL APPROACH SLOPES MUST BE CONSTRUCTED 1:4 OR FLATTER. FROM MINNESOTA RULES 2003, CHAPTER 8820.9920 (GEOMETRIC DESIGN STANDARDS; RURAL AND SUBURBAN UNDIVIDED; NEW OR OR RECONSTRUCTION PROJECTS)

THE SUBSURFACE UTILITY INFORMATION IN THIS PLAN IS UTILITY QUALITY LEVEL D. THIS QUALITY LEVEL WAS DETERMINED ACCORDING TO THE GUIDELINES OF CI/ASCE 38-02, ENTITLED "STANDARD GUIDELINES FOR THE COLLECTION AND DEPICTION OF EXISTING SUBSURFACE UTILITY DATA."

CERTIFIED BY: Loren Fellbaum LIC. NO. 43144 DATE: 04-20-2007

ALL UTILITY POLES AND OTHER UNYIELDING OBJECTS SHALL BE REMOVED AND RELOCATED OUTSIDE THE RECOVERY AREA BY THE UTILITY COMPANY.

STORM WATER POLLUTION PREVENTION PLAN (SWPPP)

PROJECTS DESCRIPTIONS

THESE FEDERAL AID PROJECTS S.P. 77-611-27, 77-611-31 & 77-602-15 ARE FOR THE RECONSTRUCTION OF CSAH 11 AND CSAH 2 AND THE BRIDGE REPLACEMENT ON LITTLE SAUK RIVER.

PROJECT ENGINEER

LOREN FELLBAUM, PE
TODD COUNTY PUBLIC WORKS
44 RIVERSIDE DRIVE
LONG PRAIRIE, MN 56347
OFFICE: 320-732-2722
FAX: 320-732-4525

AGENCY CONTACTS

MPCA: PAT SHELITO 1-218-828-2493
TODD SWCD: KITTY TEPLY 1-320-732-2644
MnDNR WATERS: TIM CROCKER 1-320-616-2450 EXT. 234
CORPS. OF ENGINEERS: LEO GRABOWSKI 1-218-829-8402

PROJECT AREAS OF IMPACT

TOTAL PROJECT SIZE 99.09 ACRES
EXISTING AREA OF IMPERVIOUS SURFACE 24.15 ACRES
POST CONSTRUCTION IMPERVIOUS SURFACE 29.28
RECEIVING WATERS ARE FAIRY LAKE, LONG LAKE AND LITTLE SAUK RIVER.

INSPECTION AND MAINTENANCE

THE PERMITTEE MUST ROUTINELY INSPECT CONSTRUCTION SITE ONCE EVERY SEVEN (7) DAYS DURING ACTIVE CONSTRUCTION AND WITHIN 24 HOURS AFTER A RAINFALL EVENT GREATER THAN 0.5 INCHES IN 24 HOURS.
ALL INSPECTIONS AND MAINTENANCE CONDUCTED DURING CONSTRUCTION MUST BE RECORDED IN WRITING AND THESE RECORDS MUST BE RETAINED WITH THE SWPPP IN ACCORDANCE WITH PART III.D RECORDS OF EACH INSPECTION AND MAINTENANCE ACTIVITY SHALL INCLUDE:
A. DATE AND TIME OF INSPECTIONS;
B. NAME OF PERSON(S) CONDUCTING INSPECTIONS;
C. FINDING OF INSPECTIONS, INCLUDING RECOMMENDATIONS FOR CORRECTIVE ACTIONS;
D. CORRECTIVE ACTIONS TAKEN (INCLUDING DATES, TIMES, AND PARTY COMPLETING MAINT. ACTIVITIES);
E. DATE AND AMOUNT OF ALL RAINFALL EVENTS GREATER THAN 1/2 INCH (0.5 INCHES) IN 24 HOURS;
F. DOCUMENTATION OF CHANGES MADE TO THE SWPPP AS REQUIRED IN PART III.A.4.
G. CLEAN OUT OR REPLACE WHEN SEDIMENT REACHED 1/3 HEIGTH, WITHIN 24 HOURS.
H. REPAIR OR REPLACED ALL NONFUNCTIONAL DEVICES;
A INSPECTION FORM WILL BE PROVIDED IN THE PROPOSAL

SILT FENCE

STATION	LT.	RT.
CSAH 11 (S.P. 77-611-27)		
203+50 - 213+00	950'	
204+50 - 213+00		850'
SUB-TOTAL	1,800'	
CSAH 11 (S.P. 77-611-31)		
22+62 - 23+12		50'
27+82 - 28+32	50'	
45+50 - 52+50*	1,400'	
58+00 - 67+00*	1,800'	
67+00 - 74+00	700	
109+80 - 110+30	50'	
123+75 - 124+25	50'	
134+53 - 135+03	50'	
164+602 - 165+10		50'
184+20 - 184+70	50'	
197+00 - 200+00	300'	
202+00 - 203+50	150'	
235+29 - 235+79	50'	
237+25 - 240+25	300'	
250+75 - 251+25	50'	
269+04 - 269+54		50'
284+70 - 285+70	100'	
300+07 - 300+57	50'	
326+00 - 331+00	400'	
330+00 - 331+00	200'	
342+70 - 343+20	50'	
358+59 - 359+09		50'
360+00 - 360+50	50'	
361+50 - 362+00	50'	
399+45 - 399+95	50'	
SUB-TOTAL	6,150'	
CSAH 2 (S.P. 77-602-15)		
9+00 - 12+00	300'	
9+00 - 12+00		300'
SUB-TOTAL	600'	
GRAND TOTAL 8,550'		

* LOCATIONS SHALL HAVE 2 ROWS OF SILT FENCE

HYDRAULIC SOIL STABILIZER TYPE 8

STATION	LT.	RT.	ACRES
CSAH 11 (S.P. 77-611-27)			
215+00 - 216+80	*		0.17
SUB-TOTAL			0.17
CSAH 11 (S.P. 77-611-31)			
18+25 - 23+25		*	0.48
23+25 - 26+26		*	0.15
26+26 - 27+05		*	0.04
30+65 - 32+20		*	0.08
32+20 - 35+22		*	0.16
35+22 - 39+00		*	0.18
47+64 - 50+58		*	0.15
55+60 - 58+90	*		0.15
58+52 - 60+17		*	0.13
60+17 - 62+95		*	0.11
62+95 - 71+30		*	0.49
75+25 -76+20	*		0.05
77+80 - 80+10	*		0.15
77+80 - 81+23		*	0.17
84+72 - 88+05	*		0.21
88+22 - 89+43		*	0.07
134+40 - 137+50	*		0.28
150+72 - 153+65		*	0.17
194+23 - 195+50	*		0.07
240+55 - 243+20		*	0.17
240+65 - 243+20	*		0.12
252+00 - 254+38		*	0.11
271+95 - 273+50		*	0.10
310+27 - 313+80		*	0.17
331+35 - 334+10		*	0.22
352+90 - 353+80	*		0.03
370+05 - 373+45		*	0.24
378+35 - 380+00		*	0.11
SUB-TOTAL			4.57
CSAH 2 (S.P. 77-602-15)			
342+00 - 346+25		*	0.42
SUB-TOTAL			0.42
GRAND TOTAL			5.16

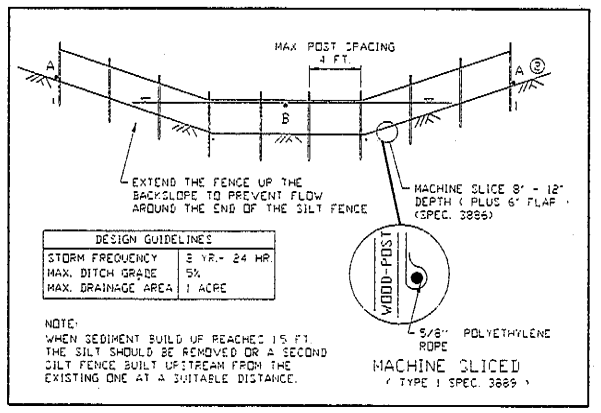

DITCH CHECK

STATION	LT.	RT.
CSAH 11 (S.P. 77-611-27)		
213+50	15'	15'
216+00		15'
218+00	15'	15'
220+00	15'	15'
224+00	15'	15'
SUB-TOTAL	135'	
CSAH 11 (S.P. 77-611-31)		
22+80	15'	
54+00		15'
80+50	15'	
81+25		15'
92+00	15'	15'
95+00	15'	15'
98+00	15'	15'
116+00	15'	15'
123+00	15'	15'
138+00	15'	
142+00		15'
148+00	15'	15'
159+00	15'	
174+00		15'
188+00		15'
196+00	15'	15'
198+00	15'	15'
200+00	15'	15'
264+00	15'	15'
297+00	15'	15'
304+00		15'
315+00	15'	15'
317+00	15'	15'
319+00		15'
321+00		15'
323+00	15'	15'
325+00		15'
327+00		15'
333+00	15'	
335+00	15'	
346+00		15'
348+00		15'
350+00	15'	15'
352+00	15'	15'
354+00	15'	15'
356+00	15'	
363+00	15'	15'
365+00	15'	15'
367+00	15'	15'
372+00	15'	
374+00		15'
383+00	15'	15'
389+00	15'	15'
SUB-TOTAL	960'	
CSAH 2 (S.P. 77-602-15)		
344+00	15'	
3+50	15'	15'
SUB-TOTAL	45'	
GRAND TOTAL 1,140'		

EROSION CONTROL BLANKETS STRAW-RD-1S

STATION	LT.	RT.	LOCATION	WIDTH	LENGTH	AREA (SY)
CSAH 11 (S.P. 77-611-27)						
205+42 - 205+58	*		INVERT	46'	16	82
205+42 - 205+58		*	INVERT	22'	16	39
212+00 - 216+50		*	DITCH	16'	450	800
218+00 - 220+00	*		DITCH	16'	200	356
218+00 - 220+00		*	DITCH	16'	200	356
SUB-TOTAL						1,632
CSAH 11 (S.P. 77-611-31)						
22+79 - 22+95	*		DITCH	34'	16'	60
38+00 - 28+16	*		DITCH	56'	16'	100
42+30 - 47+64		*	SLOPE	16'	534'	949
46+00 - 52+00	*		SLOPE	32'	600'	2,133
59+00 - 65+00	*		SLOPE	8'	600'	533
69+25 - 75+00	*		SLOPE	16'	575'	1,022
70+50 - 70+66	*		INVERT	75'	16'	133
70+50 - 70+66		*	INVERT	27'	16'	48
76+12 - 76+28		*	INVERT	34'	16'	60
81+10 - 86+00	*		SLOPE	16'	490'	871
97+00 - 103+00	*		SLOPE	16'	600'	1,067
109+97 - 110+13	*		INVERT	37'	16'	66
109+97 - 110+13		*	INVERT	31'	16'	55
124+90 - 125+06	*		INVERT	41'	16'	73
124+90 - 125+06		*	INVERT	42'	16'	75
134+70 - 134+86		*	INVERT	44'	16'	78
164+78 - 164+93	*		INVERT	25'	16'	44
164+78 - 164+93		*	INVERT	30'	16'	53
184+37 - 184+53	*		INVERT	40'	16'	71
184+37 - 184+53		*	INVERT	29'	16'	52
235+46 - 235+64	*		INVERT	30'	16'	53
235+46 - 235+64		*	INVERT	32'	16'	57
250+91 - 251+07	*		INVERT	36'	16'	64
250+91 - 251+07		*	INVERT	37'	16'	66
269+21 - 269+37	*		INVERT	20'	16'	36
269+21 - 269+37		*	INVERT	20'	16'	36
300+25 - 300+41	*		INVERT	31'	16'	55
300+25 - 300+41		*	INVERT	30'	16'	53
315+72 - 321+89		*	SLOPE	16'	617'	1,097
325+00 - 335+75	*		SLOPE	32'	1575'	5,600
329+10 - 329+50		*	INVERT	16'	40'	71
329+70 - 330+10		*	INVERT	16'	40'	71
341+80 - 350+50		*	SLOPE	16'	870'	1,547
342+87 - 343+03	*		INVERT	50'	16'	89
342+87 - 343+03		*	INVERT	32'	16'	57
358+76 - 358+92	*		INVERT	30'	16'	53
358+76 - 358+92		*	INVERT	30'	16'	53
356+00 - 360+50	*		SLOPE	16'	450'	800
356+00 - 360+50		*	SLOPE	16'	450'	800
399+63 - 399+79	*		INVERT	34'	16'	60
399+67 - 399+79		*	INVERT	35'	16'	62
SUB-TOTAL						18,325
CSAH 2 (S.P. 77-602-15)						
245+92 - 246+08	*		INVERT	32'	16'	57
0+67 - 0+83	*		INVERT	32'	16'	57
0+67 - 0+83		*	INVERT	32'	16'	57
9+92 - 10+08	*		INVERT	32'	16'	57
9+92 - 10+08		*	INVERT	32'	16'	57
SUB-TOTAL						284
GRAND TOTAL						20,242

NARRATIVE SUPPLEMENT TO THE STORM WATER POLLUTION PREVENTION PLAN

Project Description:
See Title Sheet.

Construction Notes:
Construction shall be governed by 2005 MN/DOT Spec Book and the special provisions. The Contractor shall keep the inspection and maintenance log.

Specific Requirements
The Contractor must identifiy an Erosion Control Supervisor who shall be knowledgeable and experienced in the application of erosion prevention and sediment control Best Management Practices (BMP's). The Erosion Control Supervisor will work with the Engineer to oversee and implement the SWPPP, and the installation, inspection, and maintenance of erosion prevention and sediment control BMP's before and during construction.

The Contractor shall develop a chain of responsibility with all operators on the site to ensure the SWPPP will be implemented.

The Contractor/Erosion Control Supervisor shall inspect all erosion control devices on the site at least every seven days or within 24 hours after a storm event of 0.5-inches or more. The Contractor shall take action to eliminate any deficiencies found during these inspections. Documentation of these inspections shall be in accordance with the NPDES Permit Part IV.E. Copies of the inspection reports are to be submitted to the Engineer.

The Contractor is required to maintain all erosion control devices until permanent vegetation is 70% established. Requirements for maintenance of individual erosion and sediment control devices are described in Part IV.E of the Permit.

When the project is completed, the entire site has been stabilized and all erosion control measures have been removed, the Owner and Contractor are jointly required to submit to the MPCA a Notice of Termination (NOT)

Unique Environmental Concerns
No unique environmental concerns exist for this project.

Unique Storm Water Management Features
No unique storm water management features exist for this project.

TMDL Implementation Plans Containing Storm Water Requirements
No TMDL Implementation Plans currently exist for the recieving waters on this project.

Dewatering
If dewatering is necessary, BMP's must be implemented. No water containing sediment or other pollutants may be discharged to a Water of the State. Some possible BMP's are listed below:

BMP	Considerations
Retain water on site	Available space, sandy soils, sediment pollution only.
Discharge to adjacent land or facility	Appropriate landowner or facility, possible pre-treatment, adequate facility capacity.
Transport off site to appropriate facility	For highly polluted water with hazardous materials

Chemical Containment
All chemicals shall be stored in locked containers when not in use. The Erosion Control Supervisor shall make a spill response plan before the application of any chemical that may be harmful to the environment.

Truck washing and concrete washout shall take place in a location where no runoff will reach a Water of the State. If deemed necessary by the Erosion Control Supervisor, the contents shall be disposed of at an appropriate facility off site.

Payment
Cost for permanent and temporary erosion control measures shown on the plans will be paid per unit bid prices. The costs to maintain and remove these devices shall be incidental to the bid items. The cost for temporary seeding, soil stabilization, or any additional temporary erosion control devices shall be paid according to 2573.5A. All costs for documentation required by the Permit and for providing an Erosion Control Supervisor shall be incidental to other items unless a specific bid item is established.

Construction Practices to Minimize Storm Water Contamination
-Silt fence shall be constructed around stockpiles when necessary to retain sediment.
-Stockpiles should be constructed away from slopes and natural drainage ways.
-Non-hazardous material will be collected and stored securely in a metal dumpster.
-Trash and construction debris will be disposed of in a dumpster.
-No construction materials will be buried on site.
-Licensed sanitary waste management handler will dispose of sanitary waste.
-Fertilizers will be stored in covered locations.
-Vehicles will be monitored for leaks and preventative maintenance scheduled.
-Petroleum products will be stored in tightly sealed, double containment vessels.
-Spill kits will be available during equipment fueling and maintenance operations.
-Asphalt substances shall be applied according to manufactures recommendations.
-Paint and curing compounds will be tightly sealed and stored when not in use.
-Excess paint and curing compound shall be disposed of according to manufactures recommendations.
-Spill cleanup materials will be available on site. Material shall include but not limited to brooms, mops, rags, floves, absorbent material, sand plastic and metal containers.
-Spray guns willl be cleaned on removable surfaces such as tarpaulins.
-All spills will be reported immediately.
-Spills that reach storm water conveyance systems connected to a Water of the State shall be immediately reported to the MPCA State Duty Officer.
-Form release oil will be applied over a pallet covered with absorbent material to collect excess fluid. The absorbent material shall be replaced when saturated.

Sequence of Construction
The actual sequencing of construction will be determined by the Contractor's operation. The following may not be applicable but, can be used as a guideline for sequencing determination.

1. Installation of silt fence and all down gradient erosion control devices.
2. Clearing and grubbing operations.
3. Up gradient topsoil removals and stockpiling.
4. Site excavation, bridge installation and grading.
5. Topsoil placement in completed areas.
6. Turf establishment in completed areas.
7. Install aggregate base.
8. Final grading.
9. Final turf establishment and erosion control.
10. Install bituminous surfacing.
11. Remove erosion control devices after 70% permanent vegetation is established.