MINNESOTA DEPARTMENT OF TRANSPORTATION

CONSTRUCTION PLAN FOR RELOCATION OF SHODDY MILL & WAREHOUSE BUILDINGS

LOCATED ON T.H. 36

STATE PROJECT NO. 8214-114Q

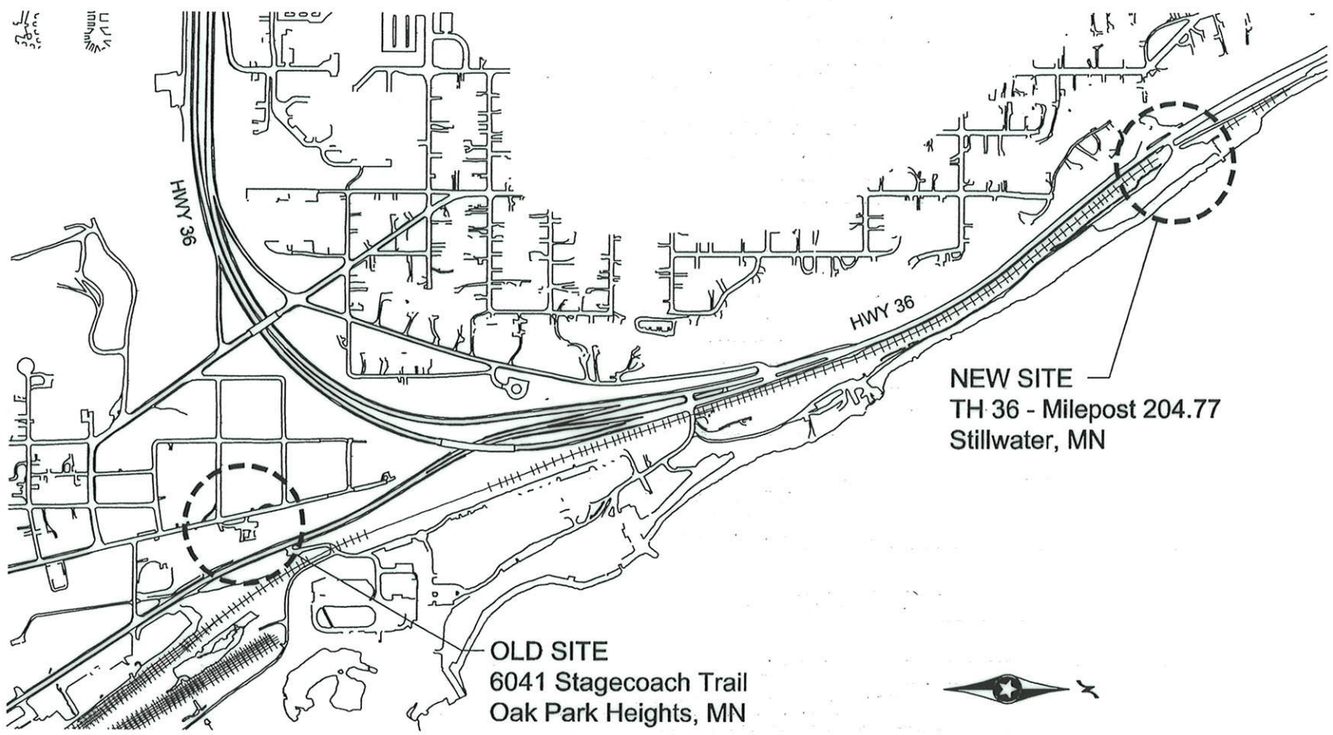

PROJECT LOCATION

0 400 800 FT

STATE FUNDS

GOVERNING SPECIFICATIONS

THE 2005 EDITION OF THE MINNESOTA DEPARTMENT OF TRANSPORTATION "STANDARD SPECIFICATIONS FOR CONSTRUCTION" SHALL GOVERN.

Sheet Index

THIS SET OF DOCUMENTS CONTAINS 28 SHEETS

A000	TITLE SHEET
A001	ESTIMATED QUANTITIES AND TABULATIONS
A002	HISTORICAL/ARCHITECTURAL PROTECTION PLAN
A003	HAZARDOUS MATERIAL ABATEMENT PLAN
C100	REMOVAL PLAN
C200	LAYOUT PLAN
C300	GRADING & DRAINAGE PLAN
C301	STORMWATER POLLUTION PREVENTION PLAN
C302	EROSION & SEDIMENT CONTROL DETAILS
C303	MnDOT STANDARD EROSION & SEDIMENT CONTROL DETAILS
C310	CROSS SECTIONS
C311	CROSS SECTIONS
C312	CROSS SECTIONS
C313	CROSS SECTIONS
C314	CROSS SECTIONS
C315	CROSS SECTIONS
C316	CROSS SECTIONS
C317	CROSS SECTIONS
C400	UTILITY PLAN
C500	UTILITY DETAILS
L100	LANDSCAPE PLAN
A100	PROPOSED RELOCATION ROUTE
A101	OVERALL SITE PLAN (OLD SITE)
A200	FLOOR PLANS
A300	WAREHOUSE ELEVATIONS (OLD SITE)
A301	SHODDY MILL ELEVATIONS (OLD SITE)
A400	WALL SECTIONS & DETAILS (OLD SITE)
S200	FOUNDATION PLAN & DETAILS

The following Standard Plates, approved by the Federal Highway Administration, shall apply on this project.

STANDARD PLATES

PLATE NO.	DESCRIPTION
3000L	REINFORCED CONCRETE PIPE (5 SHEETS)
3100G	CONCRETE APRON FOR REINFORCED CONCRETE PIPE
3132A	GRATE FOR 1:4 PRECAST CONCRETE APRONS
4005L	MANHOLE OR CATCH BASIN - DESIGN F
4006L	MANHOLE OR CATCH BASIN - DESIGN G & N
4101D	RING CASTING FOR MANHOLE OR CATCH BASIN
4110F	COVER CASTING FOR MANHOLE - CASTING 715 & 716
4143E	STOOL GRATE & CONCRETE FRAME - CASTING 731
8000I	STANDARD BARRICADES
9322K	CHAIN LINK FENCE (2 SHEETS)

PLAN REVISIONS

DATE	SHEET NO.	APPROVED BY

I hereby certify that this plan was prepared by me or under my direct supervision and that I am a duly Licensed Professional Engineer under the laws of the State of Minnesota.
SIGNATURE:
PRINTED NAME: CRAIG A. MILKERT
DATE: JULY 26, 2010 LIC. NO.: 18360

I hereby certify that the final field revisions, if any, were prepared by me or under my direct supervision and that I am a duly Licensed Professional Engineer under the laws of the State of Minnesota.
SIGNATURE:
PRINTED NAME: MICHAEL C. AARON
DATE: JULY 26, 2010 LIC. NO.: 25721

I hereby certify that this plan was prepared by me or under my direct supervision and that I am a duly Licensed Architect under the laws of the State of Minnesota.
SIGNATURE:
PRINTED NAME: WILLIAM D. HICKEY
DATE: JULY 26, 2010 LIC. NO.: 20111

PROJECT LOCATION
COUNTY : Washington
DISTRICT : Metro

FOR PLANS & UTILITIES SYMBOLS SEE TECHNICAL MANUAL

PROJ. NO.
8214-114Q

RECOMMENDED FOR APPROVAL BY: District Transportation Engineer Date

RECOMMENDED FOR APPROVAL BY: City Engineer - City of Stillwater Date

DATE MODIFIED: JULY 26, 2010	DRAWN BY: D. KIRTZ
PROJECT MANAGER: M.HAMRI	CHECKED BY: C. MILKERT

COLLABORATIVE DesignGroup, Inc.
100 Portland Avenue South, Suite 100
Minneapolis, Minnesota 55401
p 612.332.3654 f 612.332.3626
www.collaborativedesigngroup.com

STATE OF MINNESOTA
DEPARTMENT OF TRANSPORTATION
OFFICE OF TECHNICAL SUPPORT
SITE DEVELOPMENT UNIT
TRANSPORTATION BUILDING
ST. PAUL, MINNESOTA 55155-1899

RELOCATION OF SHODDY MILL & WAREHOUSE BUILDINGS
TITLE SHEET

STATEMENT OF ESTIMATED QUANTITIES

TAB.	ITEM NO.	ITEM DESCRIPTION		UNIT	ESTIMATED	FINAL
	2021.501	MOBILIZATION		LUMP SUM	1	
	2051.601	TEMPORARY HAUL ROAD		LUMP SUM	1	
	2101.511	CLEARING AND GRUBBING		LUMP SUM	1	
	2103.505	DISCONNECT SEWER SERVICE		EACH	1	
	2103.507	DISCONNECT WATER SERVICE		EACH	1	
	2103.601	BUILDING RELOCATION	(13)	LUMP SUM	1	
A	2104.503	REMOVE CONCRETE SLAB		SQ FT	2700	
	2104.507	REMOVE CONCRETE STRUCTURE	(1)	LUMP SUM	1	
	2104.509	REMOVE RAILROAD TRACK	(2)	LF	X	
	2104.602	REMOVE CONTAMINATED SOIL	(3, 10)	TONS	910	
	2104.603	SALV AGE STEEL PLATES	(4)	LUMP SUM	1	
B	2105.521	COMMON BORROW CV	(P)	CU YD	3500	
	2105.522	SELECT GRANULAR BORROW CV	(P)	CU YD	50	
	2105.525	TOP SOIL BORROW LV		CU YD	X	
	2105.604	GEOTEXTILE FABRIC TYPE IV		SQ YD	155	
	2105.607	BIORETENTION SOIL MIX	(P)	CU YD	X	
	2411.601	NEW CONCRETE FOUNDATIONS	(5)	LUMP SUM	1	
	2411.602	RECONSTRUCT MASONRY STRUCTURE	(6)	EACH	1	
	2411.604	GEOCELL		SQ YD	140	
	2501.511	15" RC PIPE CLASS V		LIN FT	40	
	2502.541	6" PERF TP PIPE DRAIN	(14)	LIN FT	205	
	2503.573	FURNISH & INSTALL CONCRETE APRON		EACH	1	
	2506.502	CONSTRUCT DRAINAGE STRUCTURE, DESIGN F		LIN FT	X	
	2506.502	CONSTRUCT DRAINAGE STRUCTURE, DESIGN H		LIN FT	X	
	2506.516	CASTING ASSEMBLY		EACH	2	
	2511.501	RANDOM RIPRAP CLASS IV		TON	20	
	2520.501	LEAN MIX BACKFILL	(7)	CU YD	815	
	2557.501	WIRE FENCE DES 60-9322		LIN FT	370	
	2557.516	PEDESTRIAN GATE		EACH	1	
	2557.522	METAL BRACE ASSEMBLY	(8)	EACH	12	
	2557.527	ELECTRICAL GROUND	(9)	EACH	5	
	2557.601	WEED CONTROL		LUMP SUM	1	
	2563.601	TRAFFIC CONTROL		LUMP SUM	1	
	2571.602	TREE PRUNING	(12)	LUMP SUM	1	
	2572.501	TEMPORARY CONSTRUCTION FENCE		LIN FT	1500	
C	2573.502	SILT FENCE, TYPE HEAVY DUTY		LIN FT	900	
	2573.505	FLOTATION SILT CURTAIN, TYPE MOVING WATER	(11)	LIN FT	600	
D	2573.540	FILTER LOG TYPE COMPOST LOG		LIN FT	725	
	2575.525	EROSION STABILIZATION MAT CLASS 3		SQ YD	25	
	2575.550	COMPOST, GRADE 2 SPECIAL LV		CU YD	600	
	2575.555	TURF ESTABLISHMENT	(16)	LUMP SUM	1	
	2575.604	COMPOST GROUTING		SQ YD	1700	
		NEW UTILITIES-CITY OF STILLWATER	(15)			
	2503.511	4" PVC PIPE SEWER	(15)	LIN FT	50	
	2503.602	CONNECT TO EXISTING SANITARY SEWER	(15)	EACH	1	
	2504.573	INSTALL WATER SERVICE SYSTEM	(15)	EACH	1	
	2506.602	FURNISH & INSTALL MANHOLE		EACH	1	

(P) = PLAN QUANTITY

CV = COMPACTED VOLUME

LV = LOOSE VOLUME

REMOVE CONCRETE SLAB (A)

LOCATION	QUANTITY
OLD SITE	1900 SQ FT
NEW SITE	800 SQ FT
PROJECT TOTAL	2700 SQ FT

COMMON BORROW (B)

LOCATION	QUANTITY
OLD SITE	50 CU YD
NEW SITE	3450 CU YD
PROJECT TOTAL	3500 CU YD

SILT FENCE, TYPE HEAVY DUTY (C)

LOCATION	QUANTITY
OLD SITE	400 LIN FT
NEW SITE	500 LIN FT
PROJECT TOTAL	900 LIN FT

FILTER LOG TYPE COMPOST LOG (D)

LOCATION	QUANTITY
OLD SITE	225 LIN FT
NEW SITE	500 LIN FT
PROJECT TOTAL	725 LIN FT

ESTIMATED QUANTITY NOTES:

(1) ITEM INCLUDES REMOVAL OF CONCRETE PIER, STEPS, FOUNDATIONS, AND WALLS AS SHOWN ON THE PLANS.
(2) REMOVE AND PROPERLY DISPOSE OF RAILROAD TIES & RAILS ALONG SPUR LINE.
(3) REMOVE AND PROPERLY DISPOSE OF LOOSE TRANSITE AND TILE.
(4) SALVAGE EXISTING STEEL PLATES AND HAUL TO ONSITE LOCATION DESIGNATED BY ENGINEER.
(5) ITEM INCLUDES NEW CONCRETE GRADE BEAM, CONCRETE PIERS, AND HELICAL PILES AS SHOWN ON THE DRAWINGS.
(6) ITEM INCLUDES RECONSTRUCTION OF THE STONE FOUNDATIONS IN THE EXACT CONFIGURATION AS THE ORIGINAL FOUNDATIONS ON THE OLD SITE. USE SALVAGED MATERIALS FROM EXISTING BUILDING.
(7) FILL CONVEYOR TRENCH WITH LIGHTWEIGHT CONCRETE SLURRY (LEAN MIX).
(8) PROVIDE METAL BRACE ASSEMBLY AT EACH CORNER OF WIRE FENCE.
(9) PROVIDE ELECTRICAL GROUND ON EACH SIDE OF FENCE AND AT GATE.
(10) EXCAVATE AND PROPERLY DISPOSE OF ASBESTOS CONTAMINATED SOIL AND NITRATE CONTAMINATED SOIL.
(11) RELOCATION IS INCIDENTAL TO COST.
(12) TRIM TREES AS REQUIRED FOR BUILDING MOVE.
(13) ITEM INCLUDES BUT IS NOT LIMITED TO:
  a. TEMPORARY DIS-CONNECTION AND RE-CONNECTION OF ALL UTILITIES ALONG MOVE ROUTE AS REQUIRED FOR THE BUILDING MOVE,
  b. BUILDING STABILIZATION AS SHOWN ON SHEET A301 AND AS REQUIRED FOR THE BUILDING MOVE,
  c. DISASSEMBLY OF EXISTING STONE FOUNDATIONS AS SHOWN ON THE DRAWINGS, INCLUDING NUMBERING AND DOCUMENTATION OF EXACT CONFIGURATION OF STONES, AND TRANSPORT OF SAME TO NEW SITE.
  d. TRANSPORT OF SHODDY MILL BUILDING AND WAREHOUSE BUILDING TO NEW SITE. BUILDINGS ARE TO BE PLACED OVER THE NEW CONCRETE FOUNDATIONS.
  e. ALL KNOWN HAZARDOUS MATERIALS HAVE BEEN REMOVED FROM EXISTING BUILDINGS AT OLD SITE.
  f. ANY TREE REMOVAL AT OLD SITE FOR BUILDING REMOVAL SHALL BE INCIDENTAL TO THE BUILDING RELOCATION PAY ITEM.
  g. ANY EXCAVATION REQUIRED FOR BUILDING RELOCATION SHALL BE INCIDENTAL TO PAY ITEM.
(14) ALL PIPE BENDS ARE INCLUDED IN LIN FT PAY ITEM
(15) REMOVAL & REPLACEMENT OF RAILROAD TRACKS SHALL BE CONSIDERED INCIDENTAL TO THE INSTALLATION OF NEW UTILITIES.
(16) INCLUDES OLD SITE AND NEW SITE

GENERAL NOTES:

A. THE PURPOSE OF THIS PROJECT IS TO MOVE THE SHODDY MILL AND WAREHOUSE FROM THE OLD SITE IN OAK PARK HEIGHTS, MN TO THE NEW SITE IN STILLWATER, MN. PERFORM ALL BUILDING WORK IN ACCORDANCE WITH THE SECRETARY OF INTERIORS' STANDARDS FOR HISTORIC BUILDINGS. ALL SUBMITTALS INDICATED IN SPECIFICATION SECTION 01391 "HISTORIC TREATMENT PROCEDURES" MUST BE APPROVED PRIOR TO THE COMMENCEMENT OF WORK ON THE BUILDINGS.
B. USE BEST MANAGEMENT PRACTICES TO PROTECT WATER QUALITY, INCLUDING CONTROLLING THE SPREAD OF DUST. ADHERENCE TO THE MPCA STORMWATER PROGRAM FOR CONSTRUCTION ACTIVITY (GENERAL STORMWATER PERMIT FOR CONSTRUCTION ACTIVITY - MNR1000001) IS REQUIRED.
C. PERFORM ALL WORK IN ACCORDANCE WITH CURRENT OSHA SAFETY STANDARDS AND IN ACCORDANCE WITH MN/DOT 1706.
D. MN/DOT 1407 (FINAL CLEANUP) AND 1712 (PROTECTION AND RESTORATION OF PROPERTY) APPLY.
E. WHEREVER THE WORD "INCIDENTAL" IS USED, NO DIRECT PAYMENT WILL BE MADE.
F. REMOVE AND DISPOSE OF ALL DEBRIS AND EXCESS OR UNUSABLE MATERIAL OFF RIGHT OF WAY (EXCEPT TOPSOIL) IN ACCORDANCE WITH MN/DOT 2104C.
G. MATERIALS NOT UTILIZED ON THIS PROJECT WILL BECOME THE PROPERTY OF THE CONTRACTOR AND DISPOSED OF OFF THE RIGHT OF WAY IN ACCORDANCE WITH MN/DOT 2104 AND AS AGREED UPON BY THE ENGINEER.
H. DO NOT ALTER PROPERTY DRAINAGE EXCEPT AS SHOWN ON THE DRAWINGS.
I. ALL AREAS DISTURBED BY CONSTRUCTION SHALL BE FINISH GRADED TO BLEND INTO SURROUNDING EXISTING GRADES FOR POSITIVE DRAINAGE.
J. CONTRACTOR SHALL RESTORE DAMAGE TO SITE DURING THE CONTRACTOR'S OPERATIONS IN A MANNER DIRECTED BY THE PROJECT MANAGER. THIS INCLUDES BUT IS NOT LIMITED TO VEGETATION, PAVING, AND STRUCTURES.
K. MEASUREMENT AND PAYMENT SHALL BE ACCORDING TO QUANTITIES AND UNITS LISTED ON THE STATEMENT OF ESTIMATED QUANTITIES TABULATION UNLESS OTHERWISE NOTED IN THE SPECIAL PROVISIONS. ALL ITEMS SHALL BE CONSTRUCTED ACCORDING TO THE PLANS AND SPECIFICATIONS.
L. ALL WORK ALONG RIVER SHORELINE SHALL BE DONE FROM SHORE. NO BOATS OR BARGES ARE ALLOWED.
M. COMMON BORROW SHALL BE FREE OF ORGANIC & HAZARDOUS MATERIALS.
N. ALL GRADING MATERIALS SHALL BE PLACED USING THE "QUALITY COMPACTION" METHOD.

UTILITY NOTES:

A. IT SHALL BE THE CONTRACTOR'S RESPONSIBILITY TO UTILIZE THE "GOPHER STATE ONE CALL" AT 1-800-252-1166 OR 811, BEFORE DIGGING, REQUIRED BY MINNESOTA STATUTE 216D AND IN ACCORDANCE WITH Mn/DOT 1507.
B. ALL EXISTING UTILITIES ARE TO REMAIN IN PLACE AND MUST BE PROTECTED UNDER THIS PROJECT, UNLESS SHOWN OTHERWISE.
C. THE SUBSURFACE UTILITY INFORMATION IN THIS PLAN IS UTILITY LEVEL D. THIS UTILITY LEVEL WAS DETERMINED ACCORDING TO THE GUIDELINES OF CI/ASCE38-02, ENTITLED "STANDARD GUIDELINES FOR THE COLLECTION AND DEPICTION OF EXISTING SUBSURFACE UTILITY DATA".

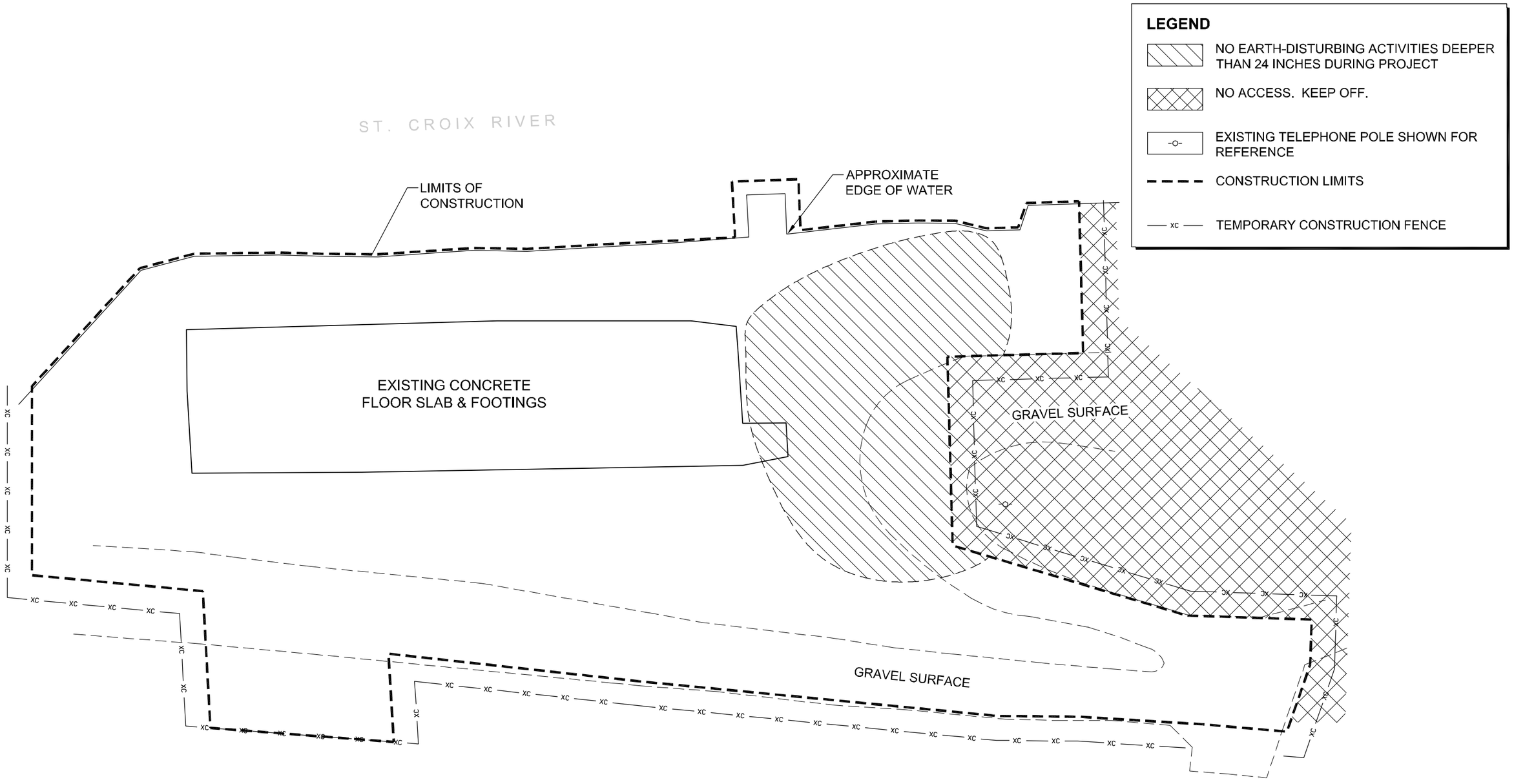

1 A002 HISTORICAL / ARCHAELOGICAL PROTECTION PLAN (NEW SITE)

0 20 40 FT

DATE MODIFIED: AUGUST 06, 2010	DRAWN BY: D. KIRTZ	I hereby certify that this plan was prepared by me or under my direct supervision and that I am a duly Licensed Architect under the laws of the State of Minnesota.	SIGNATURE:	COLLABORATIVE DesignGroup, Inc. 100 Portland Avenue South, Suite 100 Minneapolis, Minnesota 55401 p 612.332.3654 f 612.332.3626 www.collaborativedesigngroup.com	STATE OF MINNESOTA DEPARTMENT OF TRANSPORTATION OFFICE OF TECHNICAL SUPPORT SITE DEVELOPMENT UNIT TRANSPORTATION BUILDING ST. PAUL, MINNESOTA 55155-1899
PROJECT MANAGER: M.HAMRI	CHECKED BY: C. MILKERT		PRINTED NAME: WILLIAM D. HICKEY		
			DATE: JULY 26, 2010 LIC. NO.: 20111		

RELOCATION OF SHODDY MILL & WAREHOUSE BUILDINGS
HISTORICAL / ARCHAELOGICAL PROTECTION PLAN

STATE PROJECT 8214-114Q (TH 36) | A002 | SHEET NO. 3 OF 28

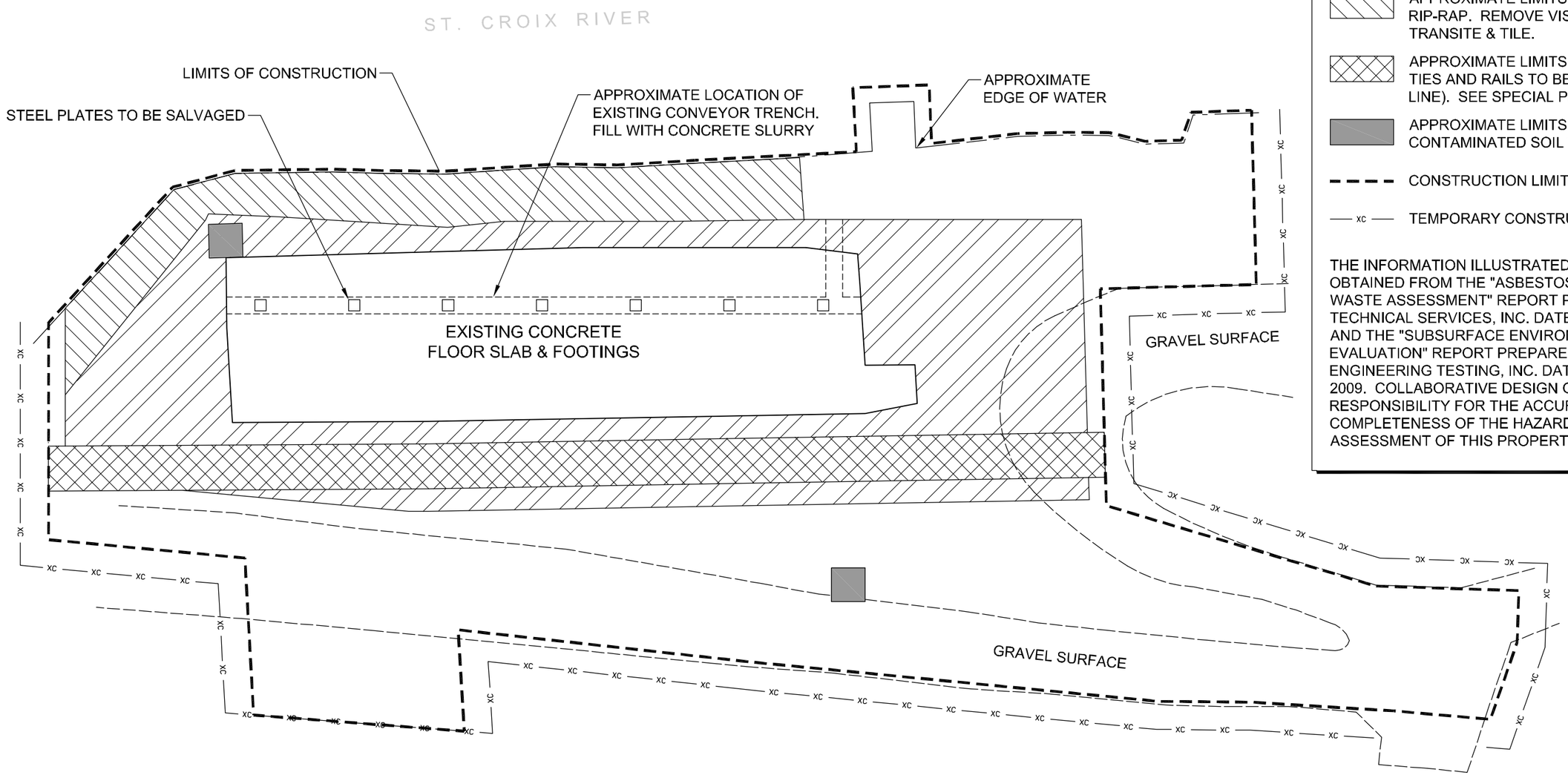

LEGEND

- APPROXIMATE LIMITS OF CONTAMINATED SOIL TO BE REMOVED (1'-0" DEEP)
- APPROXIMATE LIMITS OF CONTAMINATED RIP-RAP. REMOVE VISIBLE PIECES OF TRANSITE & TILE.
- APPROXIMATE LIMITS OF BURIED RAILROAD TIES AND RAILS TO BE REMOVED (SPUR LINE). SEE SPECIAL PROVISIONS.
- APPROXIMATE LIMITS OF NITRATE CONTAMINATED SOIL TO BE REMOVED
- CONSTRUCTION LIMITS
- xc — TEMPORARY CONSTRUCTION FENCE

THE INFORMATION ILLUSTRATED ON THIS SHEET WAS OBTAINED FROM THE "ASBESTOS AND REGULATED WASTE ASSESSMENT" REPORT PREPARED BY LEGEND TECHNICAL SERVICES, INC. DATED OCTOBER 2009, AND THE "SUBSURFACE ENVIRONMENTAL EVALUATION" REPORT PREPARED BY AMERICAN ENGINEERING TESTING, INC. DATED DECEMBER 8, 2009. COLLABORATIVE DESIGN GROUP ASSUMES NO RESPONSIBILITY FOR THE ACCURACY OR COMPLETENESS OF THE HAZARDOUS MATERIALS ASSESSMENT OF THIS PROPERTY.

1 / A003 HAZARDOUS MATERIAL ABATEMENT PLAN (NEW SITE)

0 20 40 FT

DATE MODIFIED: AUGUST 06, 2010	DRAWN BY: D. KIRTZ	I hereby certify that this plan was prepared by me or under my direct supervision and that I am a duly Licensed Architect under the laws of the State of Minnesota.	SIGNATURE:	COLLABORATIVE DesignGroup, inc. 100 Portland Avenue South, Suite 100 Minneapolis, Minnesota 55401 p 612.332.3654 f 612.332.3626 www.collaborativedesigngroup.com	STATE OF MINNESOTA DEPARTMENT OF TRANSPORTATION OFFICE OF TECHNICAL SUPPORT SITE DEVELOPMENT UNIT TRANSPORTATION BUILDING ST. PAUL, MINNESOTA 55155-1899	RELOCATION OF SHODDY MILL & WAREHOUSE BUILDINGS HAZARDOUS MATERIAL ABATEMENT PLAN
PROJECT MANAGER: M.HAMRI	CHECKED BY: C. MILKERT		PRINTED NAME: WILLIAM D. HICKEY DATE: JULY 26, 2010 LIC. NO.: 20111			STATE PROJECT 8214-114Q (TH 36) | A003 | SHEET NO. 4 OF 28

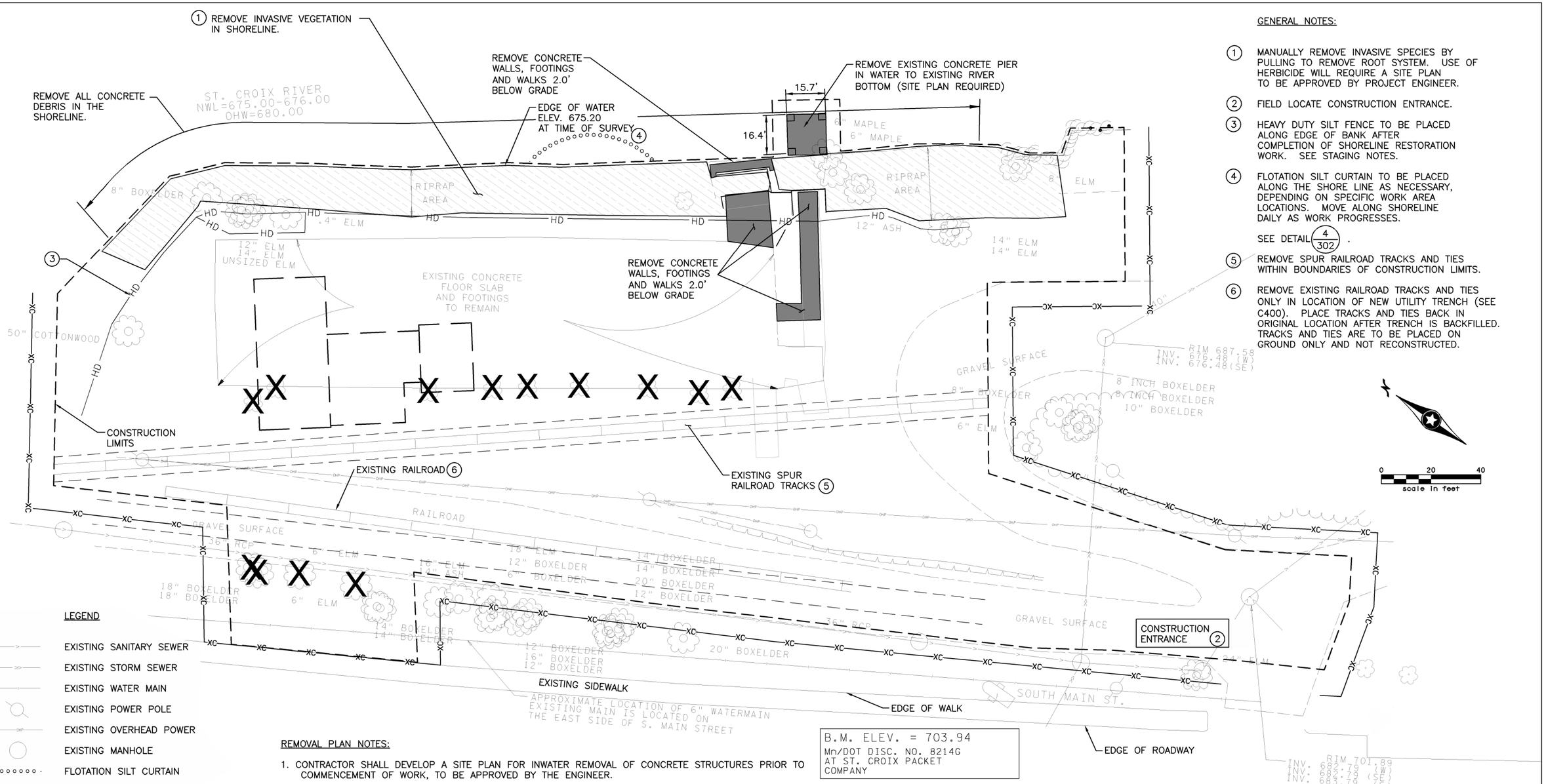

B.M. ELEV. = 703.94
Mn/DOT DISC. NO. 8214G
AT ST. CROIX PACKET COMPANY

GENERAL NOTES:

1. MANUALLY REMOVE INVASIVE SPECIES BY PULLING TO REMOVE ROOT SYSTEM. USE OF HERBICIDE WILL REQUIRE A SITE PLAN TO BE APPROVED BY PROJECT ENGINEER.
2. FIELD LOCATE CONSTRUCTION ENTRANCE.
3. HEAVY DUTY SILT FENCE TO BE PLACED ALONG EDGE OF BANK AFTER COMPLETION OF SHORELINE RESTORATION WORK. SEE STAGING NOTES.
4. FLOTATION SILT CURTAIN TO BE PLACED ALONG THE SHORE LINE AS NECESSARY, DEPENDING ON SPECIFIC WORK AREA LOCATIONS. MOVE ALONG SHORELINE DAILY AS WORK PROGRESSES.

   SEE DETAIL 4/302 .
5. REMOVE SPUR RAILROAD TRACKS AND TIES WITHIN BOUNDARIES OF CONSTRUCTION LIMITS.
6. REMOVE EXISTING RAILROAD TRACKS AND TIES ONLY IN LOCATION OF NEW UTILITY TRENCH (SEE C400). PLACE TRACKS AND TIES BACK IN ORIGINAL LOCATION AFTER TRENCH IS BACKFILLED. TRACKS AND TIES ARE TO BE PLACED ON GROUND ONLY AND NOT RECONSTRUCTED.

LEGEND

- EXISTING SANITARY SEWER
- EXISTING STORM SEWER
- EXISTING WATER MAIN
- EXISTING POWER POLE
- EXISTING OVERHEAD POWER
- EXISTING MANHOLE
- FLOTATION SILT CURTAIN
- HD — HEAVY DUTY SILT FENCE
- REMOVE CONCRETE
- CLEAR AND GRUB TREE
- REMOVE INVASIVE VEGETATION
- CONSTRUCTION LIMITS
- EXISTING HYDRANT
- XC — TEMPORARY CONSTRUCTION FENCE

REMOVAL PLAN NOTES:

1. CONTRACTOR SHALL DEVELOP A SITE PLAN FOR INWATER REMOVAL OF CONCRETE STRUCTURES PRIOR TO COMMENCEMENT OF WORK, TO BE APPROVED BY THE ENGINEER.
2. THE SUBSURFACE UTILITY INFORMATION IN THIS PLAN IS UTILITY QUALITY LEVEL D. THIS QUALITY LEVEL WAS DETERMINED ACCORDING TO THE GUIDELINES OF CI/ASCE 38-2, ENTITLED "STANDARD GUIDELINES FOR THE COLLECTION AND DEPICTION OF EXISTING SUBSURFACE UTILITY DATA."
3. ANY ITEMS OR SURFACES INTENDED TO REMAIN AND DAMAGED BY THE CONTRACTOR, MUST BE REPAIRED OR REPLACED TO ORIGINAL OR BETTER CONDITION AS APPROVED BY THE OWNER. ALL COSTS ASSOCIATED WITH THE REPAIR OR REPLACEMENT WILL BE THE SOLE RESPONSIBILITY OF THE CONTRACTOR.
4. CONTACT GOPHER STATE ONE CALL PER STATE STATUTES TO LOCATE PUBLIC UTILITIES PRIOR TO ANY EXCAVATION.
5. THE CONTRACTOR SHALL BE SOLELY RESPONSIBLE FOR ALL UTILITY LOCATES.
6. SAWCUT ALL EDGES OF BITUMINOUS OR CONCRETE REMOVALS ADJACENT TO BITUMINOUS OR CONCRETE THAT IS TO REMAIN. CONTRACTOR SHALL DEVELOP A SAW SLURRY MANAGEMENT PLAN, TO BE APPROVED BY THE ENGINEER.
7. CONTRACTOR SHALL PROVIDE TRAFFIC AND PEDESTRIAN CONTROL DURING THE CONSTRUCTION PERIOD TO THE SATISFACTION OF THE OWNER AND ENGINEER.
8. PROTECT ALL TREES EXCEPT FOR THOSE SHOWN TO BE REMOVED.

STAGING NOTES:

1. CONTRACTOR SHALL PERFORM ALL REMOVAL, CONSTRUCTION AND STABILIZATION WORK IN THE SHORELINE PRIOR TO BEGINNING FILL OPERATIONS FOR BUILDING PLACEMENT.
2. REMOVALS, CONSTRUCTION AND STABILIZATION IN THE SHORELINE SHALL TAKE PLACE IN A CONTINUOUS OPERATION SUCH THAT AREAS OF EXPOSED SOILS ARE MINIMIZED.
3. ONCE SHORE LINE WORK IS COMPLETE AND AREA IS STABILIZED, INSTALL HEAVY DUTY SILT FENCE AT TOP OF SHORELINE TO PROTECT THE SHORE AREA. EXACT LOCATION TO BE DETERMINED IN FIELD.

DATE MODIFIED: AUGUST 5, 2010	DRAWN BY: D. FITCHORN	I hereby certify that this plan was prepared by me or under my direct supervision and that I am a duly Licensed Professional Engineer under the laws of the State of Minnesota.	SIGNATURE:	COLLABORATIVE DesignGroup, Inc. 100 Portland Avenue South, Suite 100 Minneapolis, Minnesota 55401 p 612.332.3654 f 612.332.3626 www.collaborativedesigngroup.com	STATE OF MINNESOTA DEPARTMENT OF TRANSPORTATION OFFICE OF TECHNICAL SUPPORT SITE DEVELOPMENT UNIT TRANSPORTATION BUILDING ST. PAUL, MINNESOTA 55155-1899
PROJECT MANAGER: M. AARON	CHECKED BY: M. MOHS		PRINTED NAME: MICHAEL C. AARON		
			DATE: JUNE 23, 2010 LIC. NO.: 25721		

RELOCATION OF SHODDY MILL & WAREHOUSE BULIDINGS
REMOVAL PLAN

STATE PROJECT 8214-114Q (TH 36) | C100 | SHEET NO. 5 OF 28

LEGEND

- 6' HIGH WIRE FENCE DES 9322-72
- ORANGE CONSTRUCTION FENCE
- EXISTING OVERHEAD POWER
- EXISTING SANITARY SEWER
- EXISTING STORM SEWER
- EXISTING WATER MAIN
- CONSTRUCTION LIMITS
- TEMPORARY CONSTRUCTION FENCE
- EXISTING HYDRANT
- EXISTING MANHOLE

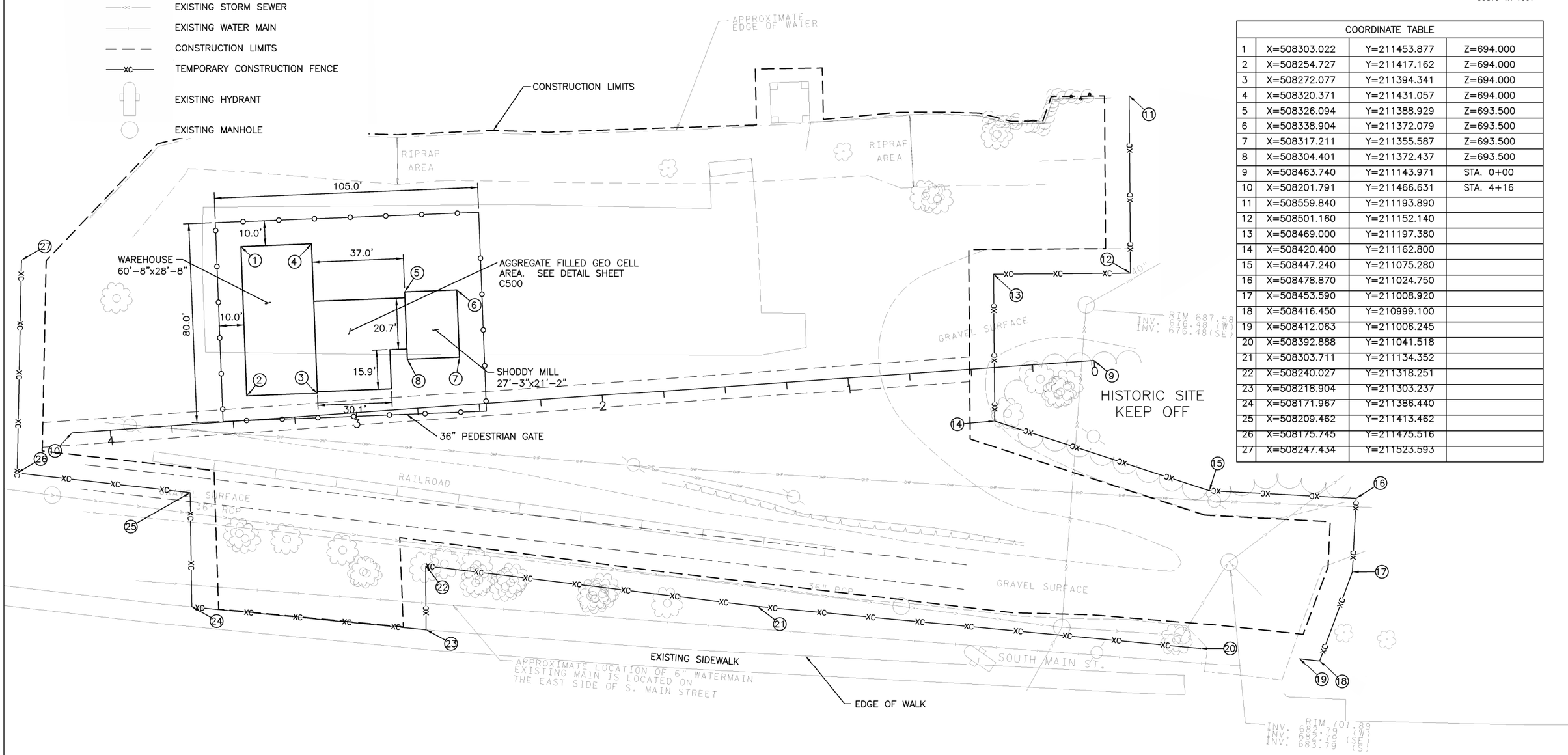

COORDINATE TABLE			
1	X=508303.022	Y=211453.877	Z=694.000
2	X=508254.727	Y=211417.162	Z=694.000
3	X=508272.077	Y=211394.341	Z=694.000
4	X=508320.371	Y=211431.057	Z=694.000
5	X=508326.094	Y=211388.929	Z=693.500
6	X=508338.904	Y=211372.079	Z=693.500
7	X=508317.211	Y=211355.587	Z=693.500
8	X=508304.401	Y=211372.437	Z=693.500
9	X=508463.740	Y=211143.971	STA. 0+00
10	X=508201.791	Y=211466.631	STA. 4+16
11	X=508559.840	Y=211193.890	
12	X=508501.160	Y=211152.140	
13	X=508469.000	Y=211197.380	
14	X=508420.400	Y=211162.800	
15	X=508447.240	Y=211075.280	
16	X=508478.870	Y=211024.750	
17	X=508453.590	Y=211008.920	
18	X=508416.450	Y=210999.100	
19	X=508412.063	Y=211006.245	
20	X=508392.888	Y=211041.518	
21	X=508303.711	Y=211134.352	
22	X=508240.027	Y=211318.251	
23	X=508218.904	Y=211303.237	
24	X=508171.967	Y=211386.440	
25	X=508209.462	Y=211413.462	
26	X=508175.745	Y=211475.516	
27	X=508247.434	Y=211523.593	

SITE LAYOUT NOTES:

1. THE SUBSURFACE UTILITY INFORMATION IN THIS PLAN IS UTILITY QUALITY LEVEL D. THIS QUALITY LEVEL WAS DETERMINED ACCORDING TO THE GUIDELINES OF CI/ASCE 38-2, ENTITLED "STANDARD GUIDELINES FOR THE COLLECTION OF DEPICTION OF EXISTING SUBSURFACE UTILITY DATA."

VERTICAL DATUM = NAVD88
HORIZONTAL DATUM = WASHINGTON COUNTY NAD83 '96 ADJ.

DATE MODIFIED: AUGUST 5, 2010	DRAWN BY: D. FITCHORN	I hereby certify that this plan was prepared by me or under my direct supervision and that I am a duly Licensed Professional Engineer under the laws of the State of Minnesota.	SIGNATURE:	COLLABORATIVE DesignGroup, Inc. 100 Portland Avenue South, Suite 100 Minneapolis, Minnesota 55401 p 612.332.3654 f 612.332.3626 www.collaborativedesigngroup.com	STATE OF MINNESOTA DEPARTMENT OF TRANSPORTATION OFFICE OF TECHNICAL SUPPORT SITE DEVELOPMENT UNIT TRANSPORTATION BUILDING ST. PAUL, MINNESOTA 55155-1899
PROJECT MANAGER: M. AARON	CHECKED BY: M. MOHS		PRINTED NAME: MICHAEL C. AARON		
			DATE: JUNE 23, 2010 LIC. NO.: 25721		

RELOCATION OF SHODDY MILL & WAREHOUSE BULIDINGS
LAYOUT PLAN

STATE PROJECT 8214-114Q (TH 36) | C200 | SHEET NO. 6 OF 28

COORDINATE TABLE		
1	X=508364.481	Y=211373.743
2	X=508397.819	Y=211337.003
3	X=508421.317	Y=211299.208
4	X=508421.967	Y=211278.878
5	X=508417.330	Y=211275.500
6	X=508402.729	Y=211288.892
7	X=508381.881	Y=211319.586
8	X=508357.448	Y=211367.842
9	X=508358.457	Y=211373.781

30" CLASS IV RIPRAP. SEE DETAILS 1/C302 3/C302

EXISTING RIPRAP. GROUT WITH COMPOST (GRADE 2) (SEE SPECS.)

EROSION STABILIZATION MAT OVERFLOW (MN/DOT 3888, CLASS 3)

PROPOSED DRAINAGE FLOW

NOTES:

(A) TIE INTO EXISTING RIPRAP

(B) PLACE SUPPLEMENTAL RIPRAP ALONG SHORELINE IN LOCATIONS WHERE CONCRETE DEBRIS HAS BEEN REMOVED. RIPRAP SHALL MATCH EXISTING RIPRAP MATERIAL. SEE DETAILS SHEET C302.

(C) SEE BASIN DETAIL 1/C300.

(D) TIE ALL JOINTS.

(E) FILL VOIDS/DEPRESSIONS IN EXISTING FLOOR SLAB WITH COMMON BORROW MATERIAL.

B.M. ELEV. = 703.94
Mn/DOT DISC. NO. 8214G
AT ST. CROIX PACKET COMPANY

0 20 40
scale in feet

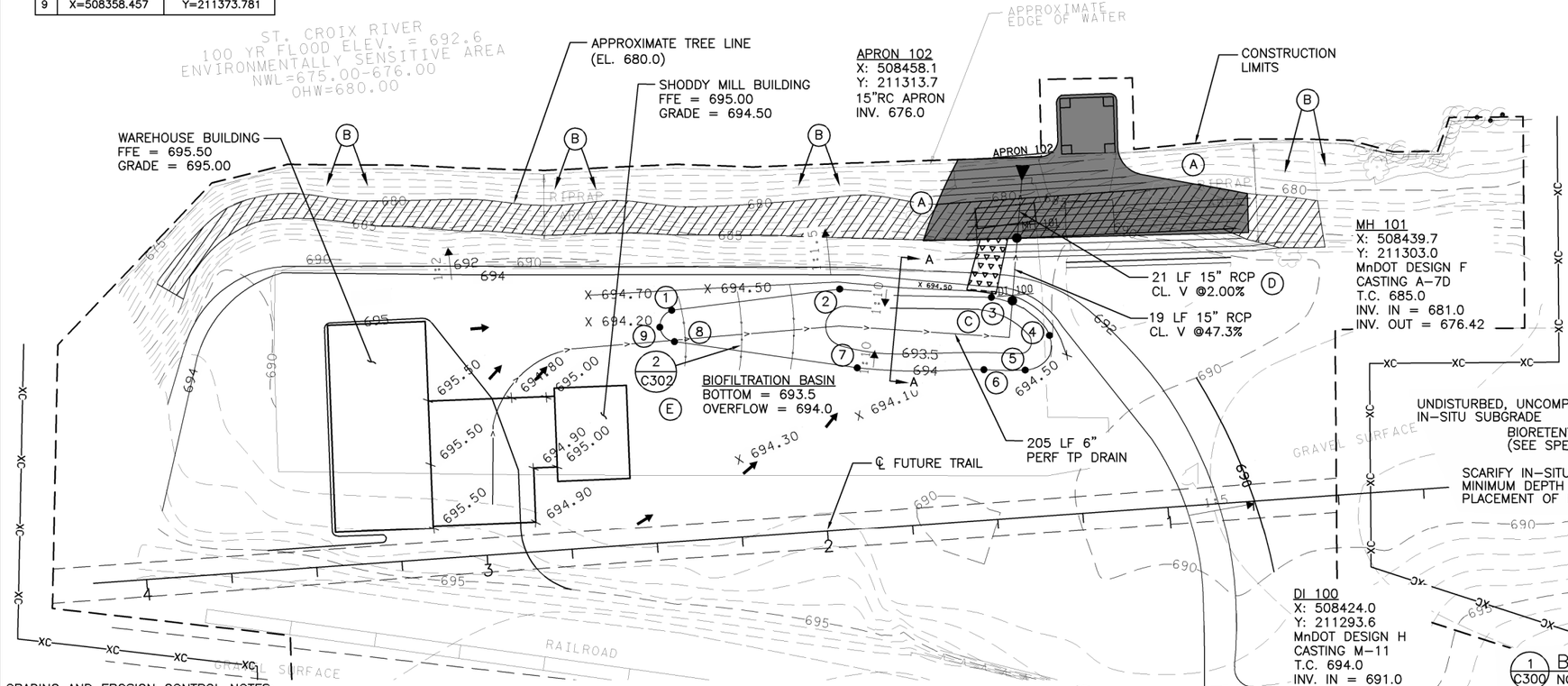

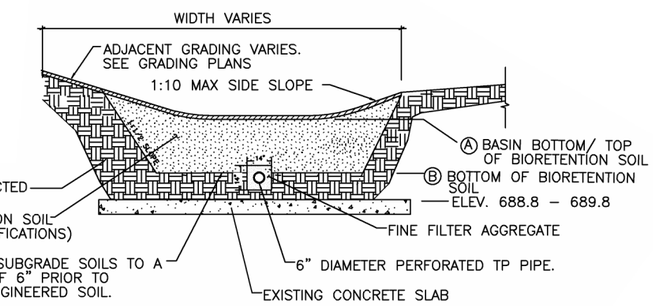

ELEV. (A)	ELEV. (B)
693.5	691.0

SECTION A–A

1/C300 BIOFILTRATION BASIN TYPICAL CROSS–SECTION
NOT TO SCALE

GRADING AND EROSION CONTROL NOTES:

1. THE SUBSURFACE UTILITY INFORMATION IN THIS PLAN IS UTILITY QUALITY LEVEL D. THIS QUALITY LEVEL WAS DETERMINED ACCORDING TO THE GUIDELINES OF CI/ASCE 38–2, ENTITLED "STANDARD GUIDELINES FOR THE COLLECTION AND DEPICTION OF EXISTING SUBSURFACE UTILITY DATA."
2. COMMON BORROW ON THIS PROJECT SHALL CONSIST OF ALL SOILS ENCOUNTERED WITH THE EXCEPTION OF TOPSOIL, DEBRIS, ORGANIC MATERIAL, AND OTHER UNSTABLE MATERIAL.
3. SELECT GRANULAR MATERIAL SHALL MEET THE REQUIREMENTS OF SPEC. 3149.2B.
4. IF GROUND WATER IS PRESENT IN THE EXCAVATION, OR IF THE EXPOSED SOILS ARE WET AND UNSTABLE, CONTACT THE OWNER OR ENGINEER FOR A RECOMMENDATION FROM THE GEOTECHNICAL ENGINEER.
5. CONTRACTOR SHALL INSTALL ALL EROSION CONTROL MEASURES PRIOR TO COMMENCING GRADING ACTIVITIES AND SHALL MAINTAIN SAID MEASURES FOR DURATION OF CONSTRUCTION ACTIVITIES. UPON ESTABLISHMENT OF TURF, THE CONTRACTOR SHALL REMOVE THE EROSION CONTROL MEASURE AND DISPOSE OF OFF SITE. BMPS SHALL BE INSPECTED BY THE ENGINEER PRIOR TO COMMENCING WORK.
6. ANY SEDIMENT FROM THE CONSTRUCTION SITE THAT ACCUMULATES ON OR OFF THE OWNER'S PROPERTY SHALL BE REMOVED BY THE CONTRACTOR AT HIS/HER EXPENSE. ANY DAMAGE THAT OCCURS FROM THE ACCUMULATED SEDIMENT OR FROM THE CONTRACTOR'S REMOVAL OF THE SEDIMENT, SHALL BE REPAIRED BY THE CONTRACTOR AT HIS/HER EXPENSE.
7. ALL EXCAVATIONS MUST COMPLY WITH THE REQUIREMENTS OF OSHA 29 CFR, PART 1926, SUBPART P, "EXCAVATIONS AND TRENCHES." THIS DOCUMENT STATES THAT EXCAVATION SAFETY IS THE SOLE RESPONSIBILITY OF THE CONTRACTOR.
8. THE CONTRACTOR MUST COMPLY WITH THE REQUIREMENTS OF THE PROJECT SPECIFIC STORM WATER POLLUTION PREVENTION PLAN (SEE SHEET C301).
9. SEE SHEETS C310 THROUGH C317 FOR CROSS SECTIONS.
10. INSTALL ENGINEERED SOIL FOR FILTRATION BASIN. ONCE ENGINEERED SOIL IS IN PLACE, INSTALL BIOROLL (TYPE COMPOST LOG) AROUND THE ENTIRE PERIMETER OF THE BASIN IN ORDER TO LIMIT MIGRATION OF SEDIMENT INTO THE BASIN.

LEGEND

690	PROPOSED CONTOUR
	EXISTING CONTOUR
	BURIED COMPOST FILTER LOG (SEE DETAIL 2/C302)
	PROPOSED 15" STORM SEWER AND 6" PERF TP DRAIN
FFE	FINISHED FLOOR ELEVATION
	CONSTRUCTION LIMITS
xc	TEMPORARY CONSTRUCTION FENCE

DATE MODIFIED: AUGUST 5, 2010	DRAWN BY: D. FITCHORN	I hereby certify that this plan was prepared by me or under my direct supervision and that I am a duly Licensed Professional Engineer under the laws of the State of Minnesota.	SIGNATURE:	COLLABORATIVE DesignGroup, Inc. 100 Portland Avenue South, Suite 100 Minneapolis, Minnesota 55401 p 612.332.3654 f 612.332.3626 www.collaborativedesigngroup.com	STATE OF MINNESOTA DEPARTMENT OF TRANSPORTATION OFFICE OF TECHNICAL SUPPORT SITE DEVELOPMENT UNIT TRANSPORTATION BUILDING ST. PAUL, MINNESOTA 55155-1899
PROJECT MANAGER: M. AARON	CHECKED BY: M. MOHS		PRINTED NAME: MICHAEL C. AARON		
			DATE: JUNE 23, 2010 LIC. NO.: 25721		

RELOCATION OF SHODDY MILL & WAREHOUSE BULIDINGS
GRADING & DRAINAGE PLAN

STATE PROJECT 8214-114Q (TH 36) | C300 | SHEET NO. 7 OF 28

STORM WATER POLLUTION PREVENTION PLAN NARRATIVE:

THE PROJECT INCLUDES RELOCATION OF THE BERGSTEIN SHODDY MILL AND WAREHOUSE BUILDINGS FROM THEIR EXISTING LOCATION TO THE PROPOSED SITE. THE PROPOSED SITE IS BOUNDED BY TH 95 ON THE WEST AND THE ST. CROIX RIVER TO THE EAST. RELOCATION OF THE BUILDINGS IS PART OF THE PROPOSED ST. CROIX RIVER CROSSING PROJECT.

PROJECT ACTIVITIES INCLUDE:

- REMOVING CONCRETE STRUCTURES AND MATERIAL FROM THE SHORELINE
- RESTORING THE SHORELINE, INCLUDING INSTALLATION OF RIPRAP AND NATIVE VEGETATION
- PLACING FILL OVER THE EXISTING CONCRETE FOUNDATION AT THE SITE
- CONSTRUCTING NEW FOUNDATIONS AND MOVING THE SHODDY MILL AND WAREHOUSE BUILDINGS TO THE SITE
- CONSTRUCTING A FILTRATION BASIN, WITH ASSOCIATED DRAIN TILE AND OUTLET

SITE MAPS

SEE PLANS

SPECIAL WATERS

THE ST. CROIX RIVER FORMS THE EASTERN BOUNDARY OF THE SITE. ALL RUNOFF FROM THE SITE FLOWS OVERLAND TO THE ST. CROIX RIVER. THE ST. CROIX RIVER IS DESIGNATED AS A "SPECIAL WATER" BY THE MINNESOTA POLLUTION CONTROL AGENCY (MPCA). THE CONTRACTOR SHALL TAKE ALL NECESSARY MEASURES TO PREVENT SEDIMENT AND SEDIMENT–LADEN RUNOFF FROM DISCHARGING TO THE ST. CROIX RIVER.

IN ORDER TO PREVENT INVASIVE SPECIES, SUCH AS ZEBRA MUSSELS AND EURASIAN WATERMILFOIL, FROM ENTERING THE WATERS OF THE ST. CROIX, IT IS IMPORTANT THAT ALL EQUIPMENT BEING USED IN THE RIVER IS DECONTAMINATED FOR INVASIVE AND EXOTIC VIRUSES AND SPECIES PRIOR TO AND AFTER USE. DECONTAMINATION INCLUDES INSPECTING ALL EQUIPMENT AND REMOVING ALL AQUATIC PLANTS, ANIMALS, AND MUD, DRAINING ALL WATER FROM EQUIPMENT THAT COMES INTO CONTACT WITH INFECTED WATERS, DISPOSING OF ALL AQUATIC PLANTS AND ANIMALS IN THE TRASH, AND WASHING ALL EQUIPMENT WITH HOT (>104°F) AND/OR PRESSURIZED WATER OR ALLOWING EQUIPMENT TO THOROUGHLY DRY FOR FIVE DAYS.

TOTAL MAXIMUM DAILY LOAD (TMDL) WATERS

THERE IS NO APPROVED TMDL FOR THE ST. CROIX RIVER. THE RIVER HAS BEEN DESIGNATED AS IMPAIRED FOR EXCESS NUTRIENTS.

LAND FEATURE CHANGES

TOTAL PROJECT AREA DISTURBED:	1.0 ACRES
TOTAL EXISTING IMPERVIOUS SURFACE AREA:	0.3 ACRES
TOTAL PROPOSED IMPERVIOUS SURFACE AREA:	0.1 ACRES

THE PROJECT WILL RESULT IN A DECREASE IN IMPERVIOUS AREA AT THE SITE.

PERMANENT STORM WATER TREATMENT BMPS

- FILL AREAS OUTSIDE OF THE BUILDING FOUNDATION FOOTPRINTS WILL BE TILLED AND AMENDED WITH COMPOST, AND SEEDED WITH NATIVE VEGETATION, IN ORDER TO PROMOTE RETENTION OF STORM WATER RUNOFF. ALL MULCH USED SHOULD BE CERTIFIED AS WEED–FREE.
- RUNOFF FROM THE SITE THAT DOES NOT INFILTRATE WILL BE DIRECTED TO A FILTRATION BASIN CONSISTING OF A LAYER OF ENGINEERED SOIL (70% SAND, 30% COMPOST) WITH AN UNDERDRAIN. THE FILTRATION BASIN HAS BEEN DESIGNED FOR A WATER QUALITY TREATMENT VOLUME EQUAL TO ½ INCH OVER THE PROPOSED IMPERVIOUS AREA, AND ¼ INCH OVER THE DISTURBED PERVIOUS AREA. THE WATER QUALITY TREATMENT VOLUME IS 500 CUBIC FEET. THIS WILL MEET THE STANDARDS OF BOTH THE NPDES CONSTRUCTION PERMIT AND THE MIDDLE ST. CROIX WATER MANAGEMENT ORGANIZATION.

STAGING NOTES

- ALL WORK IN THE SHORELINE SHALL TAKE PLACE PRIOR TO THE START OF FILL PLACEMENT. EROSION AND SEDIMENT CONTROL BMPS SHALL BE IN PLACE PRIOR TO THE START OF ANY SOIL–DISTURBING ACTIVITIES. ONCE EROSION BMPS ARE INSTALLED, THEY SHALL BE INSPECTED AND APPROVED PRIOR TO ANY SOIL DISTURBING ACTIVITIES.
- IT IS THE INTENT TO PRESERVE EXISTING TREES ALONG THE SHORELINE. PERIMETER FENCING SHOULD BE INSTALLED TO PRESERVE TREES AND TO LIMIT PEDESTRIAN ACCESS.
- ALL WORK IN THE SHORELINE SHALL TAKE PLACE IN A CONTINUOUS OPERATION, SUCH THAT REMOVALS, CONSTRUCTION, AND RESTORATION ACTIVITIES IN A PARTICULAR WORK AREA ARE STABILIZED DAILY.
- INSTALL HEAVY DUTY SILT FENCE AT THE TOP OF THE BANK AFTER SHORELINE WORK IS COMPLETE, AND BEFORE SITE FILL WORK BEGINS.
- ENGINEERED SOIL FOR THE FILTRATION BASIN SHALL BE INSTALLED. ONCE THE ENGINEERED SOIL IS INSTALLED, THE BASIN SHALL BE PROTECTED FROM SEDIMENT BY INSTALLATION OF BIOROLLS (TYPE COMPOST LOG) AROUND THE PERIMETER.

TIMING OF BMP INSTALLATION

THE EROSION PREVENTION AND SEDIMENT CONTROL BMPS SHALL BE INSTALLED AS NECESSARY TO MINIMIZE EROSION FROM DISTURBED SURFACES AND CAPTURE SEDIMENT ONSITE, AND SHALL MEET THE NPDES PERMIT PART IV CONSTRUCTION ACTIVITY REQUIREMENTS.

1) TEMPORARY PERIMETER CONTROL BMPS WILL BE INSTALLED BEFORE ANY GRUBBING OR GRADING BEGINS.

2) CLEARING AND GRADING WILL NOT OCCUR IN AN AREA UNTIL IT IS NECESSARY FOR CONSTRUCTION TO PROCEED.

3) TEMPORARY OR PERMANENT EROSION CONTROL BMPS SHALL BE PLACED WITHIN SEVEN DAYS OF COMPLETION OF WORK ACTIVITIES IN AN AREA.

4) TEMPORARY PERIMETER CONTROLS SHALL REMAIN IN PLACE UNTIL ALL CONSTRUCTION ACTIVITIES AT THAT LOCAL SITE ARE COMPLETE AND SOILS HAVE BEEN STABILIZED.

PROJECT CONTACTS

THE PROJECT ENGINEER AND CONTRACTOR ARE RESPONSIBLE FOR IMPLEMENTATION OF THE SWPPP AND INSTALLATION, INSPECTION, AND MAINTENANCE OF THE EROSION PREVENTION AND SEDIMENT CONTROL BMPS BEFORE AND DURING CONSTRUCTION.

THE CITY OF STILLWATER IS RESPONSIBLE FOR LONG TERM OPERATION AND MAINTENANCE OF THE SITE AND THE FILTRATION BASIN.

AGENCY/ORGANIZATION	NAME	PHONE NUMBER
Mn/DOT PROJECT MANAGER	JACKIE SLUSS	651–366–3624
Mn/DOT PROJECT MANAGER	MONTY HAMRI	651–234–7631
Mn/DOT PROJECT ENGINEER	ERIC EMBACHER	651–366–4302
Mn/DOT OFFICE OF ENVIRONMENTAL SVC.	DWAYNE STENLUND	612–810–9109 (CELL)
CITY OF STILLWATER PUBLIC WORKS	SHAWN SANDERS	651–430–8830
MINNESOTA POLLUTION CONTROL AGENCY	SHAWN NELSON	651–757–2604
DEPARTMENT OF NATURAL RESOURCES	MOLLY SHODEEN	651–259–5845

MPCA 24 HOUR EMERGENCY NOTIFICATION: 651–649–5451 OR 800–422–0798

CONSTRUCTION NOTES

CONSTRUCTION SHALL BE GOVERNED BY THE MN/DOT SPEC BOOK, THE SPECIAL PROVISIONS AND THE PROJECT SPECIFICATIONS WITHIN THE PROJECT MANUAL. THE CONTRACTOR SHALL KEEP INSPECTION FORMS AND THE PROJECT SWPPP AVAILABLE AT THE SITE.

GENERAL TURF ESTABLISHMENT AND TEMPORARY EROSION AND SEDIMENT CONTROL NOTES

1) THE CONTRACTOR SHALL DESIGNATE AN EROSION CONTROL SUPERVISOR FOR THE PROJECT. THE EROSION CONTROL SUPERVISOR WILL COORDINATE WITH THE PROJECT ENGINEER TO OVERSEE THE IMPLEMENTATION OF THE SWPPP, AND THE INSTALLATION, INSPECTION, AND MAINTENANCE OF THE EROSION PREVENTION AND SEDIMENT CONTROL BMPS BEFORE AND DURING CONSTRUCTION. THE EROSION CONTROL SUPERVISOR SHALL BE AVAILABLE TO BE ON THE PROJECT WITHIN 24 HOURS AT ALL TIMES DURING THE PROJECT.

2) THE EROSION CONTROL SUPERVISOR MUST ROUTINELY INSPECT AND DOCUMENT THE ENTIRE CONSTRUCTION SITE ONCE EVERY SEVEN DAYS DURING ACTIVE CONSTRUCTION. INSPECTIONS AND DOCUMENTATION SHALL ALSO OCCUR WITHIN 24 HOURS AFTER A RAINFALL EVENT GREATER THAN 0.5" WITHIN 24 HOURS, AS WELL AS SEVEN DAYS AFTER THE RAINFALL EVENT. ALL DOCUMENTATION SHALL CONFORM TO MN/DOT SPEC. 1717 EROSION CONTROL SCHEDULE AND NPDES PERMIT PART IV.E– INSPECTIONS AND MAINTENANCE.

3) ALL EROSION PREVENTION AND SEDIMENT CONTROL BMPS MUST BE INSPECTED BY THE CONTRACTOR TO ENSURE INTEGRITY AND EFFECTIVENESS. ALL NONFUNCTIONAL BMPS MUST BE REPAIRED, REPLACED, OR SUPPLEMENTED WITH FUNCTIONAL BMPS AS DIRECTED BY THE EROSION CONTROL SUPERVISOR OR THE PROJECT ENGINEER.

4) THE CONTRACTOR SHALL PROVIDE FOR TEMPORARY AND PERMANENT EROSION PREVENTION AND SEDIMENT CONTROL BMPS AS SHOWN IN THE PLANS AND THEY SHALL BE KEPT IN A FUNCTIONAL CONDITION AT ALL TIMES THROUGHOUT CONSTRUCTION. THESE MEASURES MAY BE MODIFIED AS APPROPRIATE FOR CONSTRUCTION STAGING AS DIRECTED BY THE EROSION CONTROL SUPERVISOR OR THE PROJECT ENGINEER. THE CONTRACTOR SHALL REMAIN IN COMPLIANCE WITH ALL NPDES AND OTHER PERMIT REQUIREMENTS AT ALL TIMES.

5) PIPE OUTLETS MUST BE PROVIDED WITH RIPRAP WITHIN 24 HOURS OF CONNECTION TO THE ST. CROIX RIVER.

6) ALL EXPOSED SLOPES DRAINING TO THE ST. CROIX RIVER NEED TO BE DAILY STABILIZED AS SHOWN IN THE PLANS OR AS DIRECTED BY THE EROSION CONTROL SUPERVISOR OR THE PROJECT ENGINEER.

7) SEDIMENT TRACKED FROM THE SITE SHALL BE REMOVED DAILY. SEDIMENT TRACKED ONTO ROADWAYS DURING THE MOVING OF THE BUILDINGS FROM THE EXISTING SITE TO THE PROPOSED SITE SHALL ALSO BE PROMPTLY REMOVED.

8) SEDIMENT CONTROL DEVICES SHALL REMAIN IN PLACE UNTIL STABILIZATION HAS BEEN ESTABLISHED IN ACCORDANCE WITH PART IV.C OF THE NPDES PERMIT.

9) THE CONTRACTOR SHALL PREPARE AND SUBMIT A WRITTEN, WEEKLY SCHEDULE OF PROPOSED EROSION CONTROL ACTIVITIES FOR THE PROJECT ENGINEER'S APPROVAL PER MN/DOT SPEC 1712.2D.

10) THE CONTRACTOR SHALL DEVELOP A CHAIN OF RESPONSIBILITY WITH ALL OPERATORS ON SITE TO ENSURE THAT THE SWPPP WILL BE IMPLEMENTED AND STAY IN EFFECT UNTIL THE CONSTRUCTION PROJECT IS COMPLETE. ONCE THE ENTIRE SITE HAS UNDERGONE FINAL STABILIZATION, A NOTICE OF TERMINATION CAN BE SUBMITTED TO THE MPCA.

11) ALL EXCESS LIQUID AND SOLID CONCRETE MUST BE WASHED OUT IN DESIGNATED (SIGNED) TRAP, PIT, OR DUMPSTER DEVICES, WITH THE LOCATION(S) AMENDED TO THE PLAN. CONCRETE WASHOUT MAY ONLY OCCUR IN DESIGNATED AREAS OF THE SITE. THE CONTRACTOR SHALL HAVE ON HAND DRY SAND FOR EMERGENCY CONCRETE SLURRY CONTAINMENT.

12) ALL EQUIPMENT WASHOFF MUST BE PERFORMED IN DESIGNATED AREAS THAT PREVENT THE WASH SLURRY FROM ENTERING STORM WATER CONVEYANCE SYSTEMS. THIS CAN BE DONE THROUGH USE OF GRANULAR GRADE BERMS, COMPOST FILTER LOGS, AND SEALED INLETS. A SITE PLAN WILL BE REQUIRED.

13) THE CONTRACTOR IS REMINDED THAT ALL REFUELING AND EQUIPMENT SERVICING OPERATIONS MUST PREVENT FLUIDS FROM COMING IN CONTACT WITH ANY SOILS, THE CONTRACTOR WILL HAVE A SPILL PREVENTION PROGRAM AND SPILL KITS AVAILABLE ON SITE AT ALL TIMES.

14) SOLID WASTE SHOULD BE COLLECTED AND DISPOSED OF AND HAZARDOUS MATERIALS MUST BE STORED AND DISPOSED OF TO PREVENT SPILLS, LEAKS, OR OTHER DISCHARGE IN COMPLIANCE WITH MPCA DISPOSAL REQUIREMENTS AS INDICATED IN PART IV.F–POLLUTION PREVENTION MANAGEMENT MEASURES OF THE NPDES CONSTRUCTION PERMIT.

NOTES:

1. RIPRAP ABOVE ELEV. 680 WILL BE COVERED WITH COMPOST GROUT AND SEEDED.
2. RIPRAP SHALL BE ANGULAR ROCK THAT MATCHES EXISTING RIPRAP.
3. RIPRAP SHALL ONLY BE PLACED BELOW THE WATER LINE WHERE REMOVAL OF CONCRETE STRUCTURES WILL TAKE PLACE AND SHORELINE IS DISTURBED.

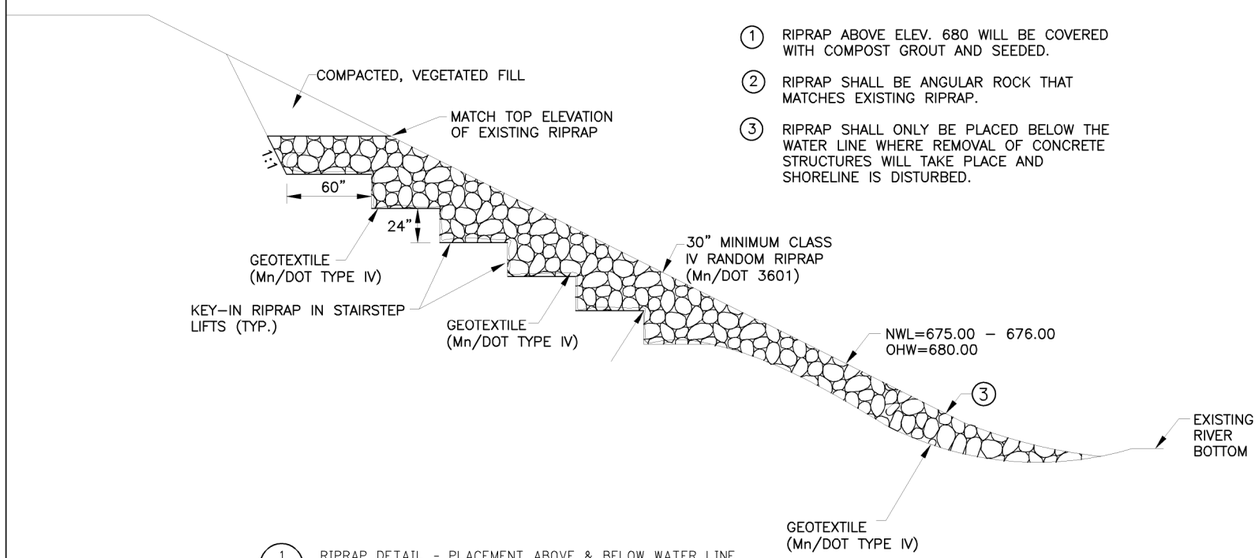

1/302 RIPRAP DETAIL - PLACEMENT ABOVE & BELOW WATER LINE

NOT TO SCALE

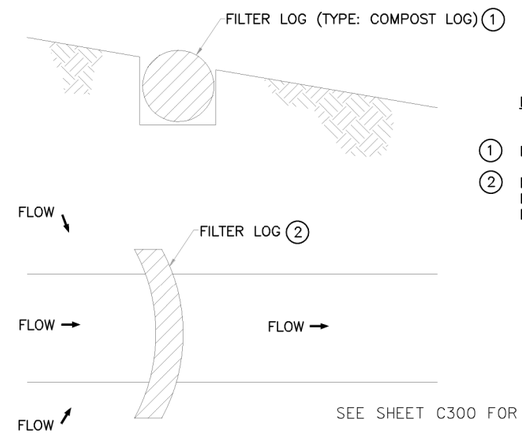

NOTES:

1. BURY COMPOST LOG ¾ OF IT'S DIAMETER.
2. EXTEND FILTER LOG SUCH THAT END IS APPROXIMATELY 6 INCHES ABOVE LOWEST PART OF DRAINAGE SWALE.

SEE SHEET C300 FOR LOCATION OF FILTER LOG

2/302 BURIED COMPOST FILTER LOG

NOT TO SCALE

NOTES:

1. RIPRAP ABOVE ELEV. 680 WILL BE COVERED WITH COMPOST GROUT AND SEEDED.
2. RIPRAP SHALL BE ANGULAR ROCK THAT MATCHES EXISTING RIPRAP.

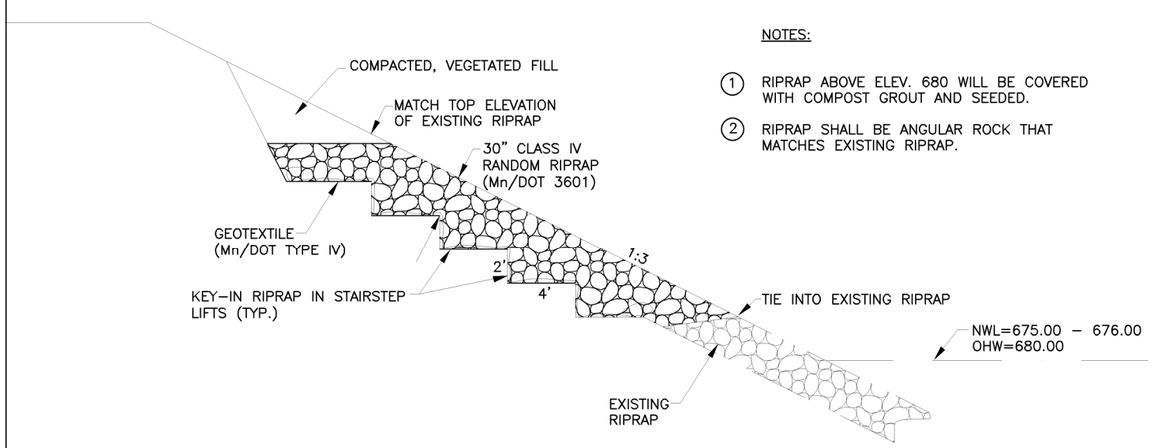

3/302 RIPRAP DETAIL - PLACEMENT ABOVE WATER LINE

NOT TO SCALE

NOTES:

1. INSTALL THREE SECTIONS OF FLOTATION SILT CURTAIN AT THE SHORELINE OF THE WORK AREA. MOVE SILT CURTAIN AS WORK PROGRESSES ALONG THE SHORE. (INCIDENTAL TO PAY ITEM)
2. PERIODICALLY PUMP WATER FROM BETWEEN SILT CURTAIN AND SHORELINE TO REMOVE ACCUMULATED SEDIMENT WHEN WATER APPEARS TO CONTAIN SEDIMENT. PUMP TO APPROVED SEDIMENTATION CONTAINER FOR WATER TREATMENT.

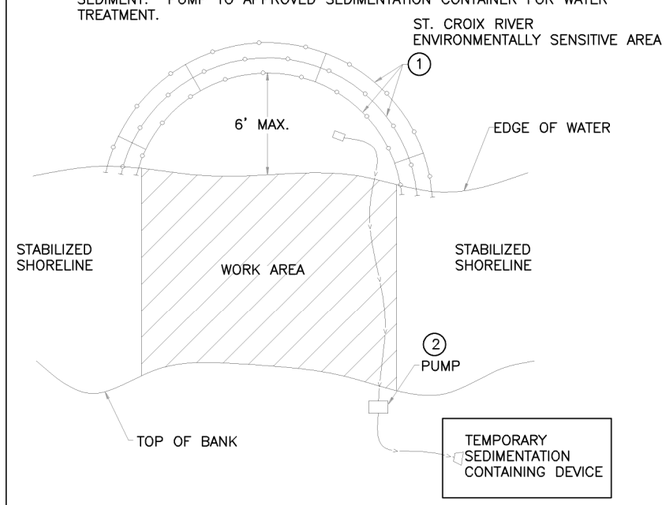

4/302 FLOTATION SILT CURTAIN DETAIL

NOT TO SCALE

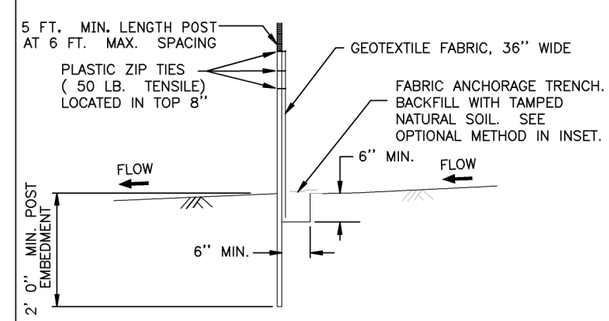

DESIGN GUIDELINES:
TO PROTECT AREAS FROM SHEET FLOW.
MAXIMUM CONTRIBUTING AREA: 1 ACRE.

5/302 SILT FENCE, HEAVY DUTY

NOT TO SCALE

DATE MODIFIED: AUGUST 5, 2010	DRAWN BY: D. FITCHORN	I hereby certify that this plan was prepared by me or under my direct supervision and that I am a duly Licensed Professional Engineer under the laws of the State of Minnesota.	SIGNATURE:	COLLABORATIVE DesignGroup, Inc. 100 Portland Avenue South, Suite 100 Minneapolis, Minnesota 55401 p 612.332.3654 f 612.332.3626 www.collaborativedesigngroup.com	STATE OF MINNESOTA DEPARTMENT OF TRANSPORTATION OFFICE OF TECHNICAL SUPPORT SITE DEVELOPMENT UNIT TRANSPORTATION BUILDING ST. PAUL, MINNESOTA 55155-1899
PROJECT MANAGER: M. AARON	CHECKED BY: M. MOHS		PRINTED NAME: MICHAEL C. AARON		
			DATE: JUNE 23, 2010 LIC. NO.: 25721		

RELOCATION OF SHODDY MILL & WAREHOUSE BULIDINGS

EROSION & SEDIMENT CONTROL DETAILS

STATE PROJECT 8214-114Q (TH 36) | C302 | SHEET NO. 9 OF 28

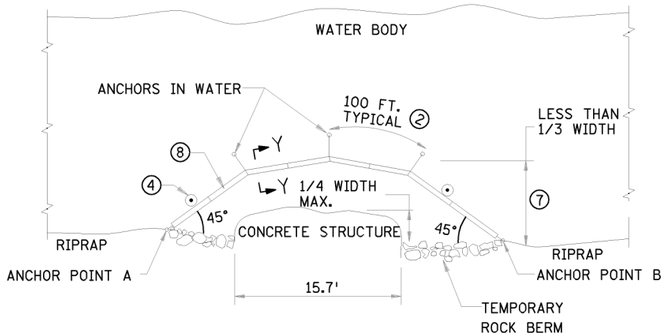

PLAN VIEW (TYPE: WORK AREA)

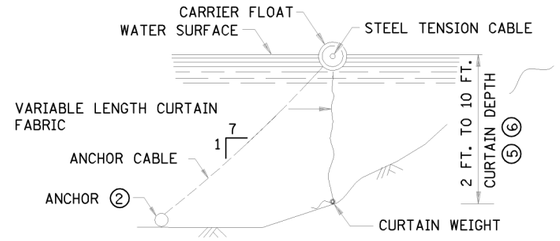

SECTION Y-Y

FLOTATION SILT CURTAIN - TYPE: WORK AREA AND STILL WATER ⑤

NOT TO SCALE

FOR CONTAINING OVERFLOWS FROM WEIRS, STANDPIPES, AND SETTLING PONDS

NOTES:

SEE SPECS. 2573 & 3887.

② FOR ANCHOR AND WEIGHT REQUIREMENTS, SEE SPEC. 2573.

④ ON U.S. COAST GUARD OR OTHER MOTORIZED WATERWAYS, BUOYS ARE REQUIRED TO MARK THE ENDS AND SPECIAL AREAS FOR VISIBILITY. PLACE BUOYS AS REQUIRED FOR NAVIGATIONAL PURPOSES.

⑤ WATER DEPTH CAN BE 0 TO 10 FEET, 0 TO 11 FEET FOR TYPE MOVING WATER.

⑥ SILT CURTAIN HEIGHT INCLUDES MAXIMUM WAVE HEIGHT FOR WATER BODY.

⑦ KEEP AS CLOSE TO WORK AREA AS POSSIBLE.

⑧ SILT CURTAIN, ROCK BERM OR SHEET PILE AS REQUIRED TO CONTROL THE INFILTRATION OF SILT.

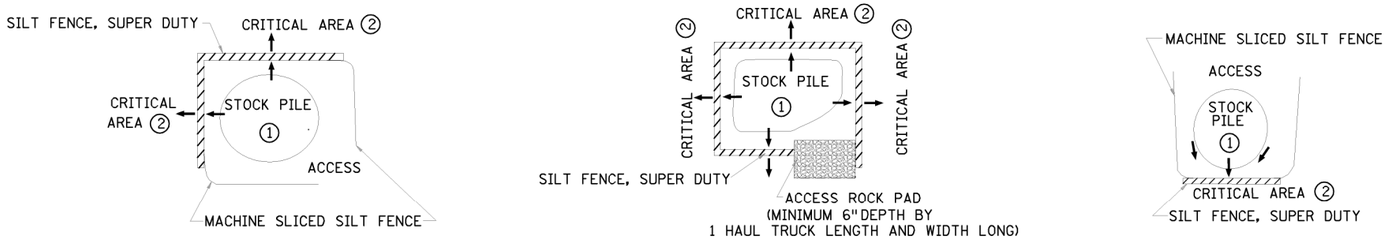

SILT FENCE, SUPER DUTY STOCK PILE CONTAINMENT

NOT TO SCALE

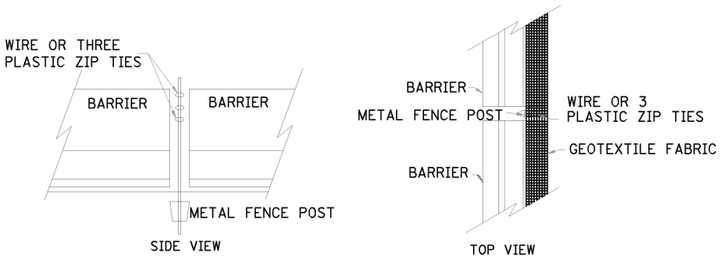

BARRIER WITHOUT CABLE RINGS

NOT TO SCALE

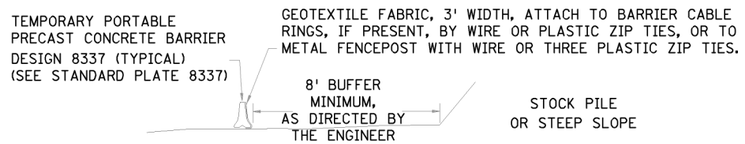

SILT FENCE, SUPER DUTY STOCK SEDIMENT CONTROL

NOT TO SCALE

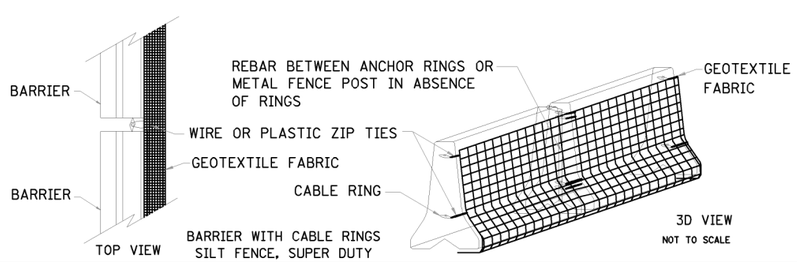

BARRIER WITH CABLE RINGS
SILT FENCE, SUPER DUTY

NOT TO SCALE

NOTES:

SEE SPECS. 2533, 2573 & 3886.

PLACE SUPER DUTY SILT FENCE ALONG A CONSTANT ELEVATION.

SUPER DUTY SILT FENCE CAN UTILIZE EITHER A CONCRETE, OR WATER FILLED, TEMPORARY MEDIAN BARRIER.

① PLACING STOCK PILES NEXT TO AN ENVIRONMENTALLY SENSITIVE AREA IS NOT RECOMMENDED. WHEN THERE ARE NO FEASIBLE ALTERNATIVES, THE SUPER DUTY SILT FENCE IS TO BE USED AS SHOWN OR AS DIRECTED BY THE ENGINEER.

② CRITICAL AREAS INCLUDE WETLANDS, JUDICIAL DITCHES, STREAMS, WATER BODIES, AND OTHER AREAS REQUIRING PROTECTION.

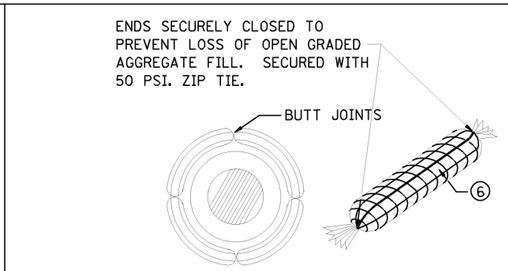

ROCK LOG/COMPOST LOG

NOT TO SCALE

⑥ GEOTEXTILE SOCK BETWEEN 4-10 FEET LONG AND 4-6 INCH DIAMETER. SEAM TO BE JOINED BY TWO ROWS OF STITCHING WITH A PLASTIC MESH BACKING OR PROVIDE A HEAT BONDED SEAM (OR APPROVED EQUIVALENT). FILL ROCK LOG WITH OPEN GRADED AGGREGATE CONSISTING OF SOUND DURABLE PARTICLES OF COARSE AGGREGATE CONFORMING TO SPEC. 3137 TABLE 3137-1; CA-3 GRADATION.

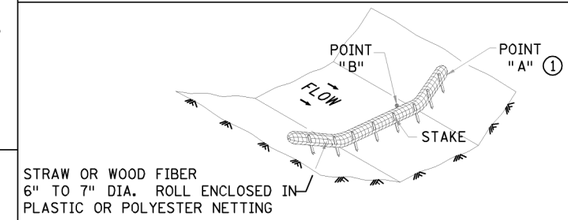

TYPE 2: BIOROLL DITCH CHECK

NOT TO SCALE

USE ON ROUGH GRADED AREAS

① POINT "A" MUST BE A MINIMUM OF 6 INCHES HIGHER THAN POINT "B" TO ENSURE THAT WATER FLOWS OVER THE DIKE AND NOT AROUND THE ENDS.

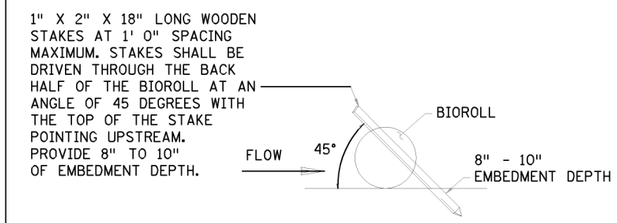

BIOROLL STAKING DETAIL

NOT TO SCALE

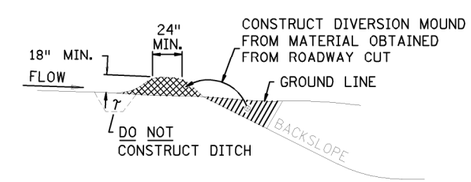

DIVERSION MOUND

NOT TO SCALE

DESIGN GUIDELINES:
STORM FREQUENCY: 10 YEAR - 24 HOUR
MAXIMUM DRAINAGE AREA: 5 ACRES
MAXIMUM DIVERSION: GRADE 5%

DATE MODIFIED: AUGUST 5, 2010	DRAWN BY: D. FITCHORN	I hereby certify that this plan was prepared by me or under my direct supervision and that I am a duly Licensed Professional Engineer under the laws of the State of Minnesota.	SIGNATURE:	COLLABORATIVE DesignGroup, Inc. 100 Portland Avenue South, Suite 100 Minneapolis, Minnesota 55401 p 612.332.3654 f 612.332.3626 www.collaborativedesigngroup.com	STATE OF MINNESOTA DEPARTMENT OF TRANSPORTATION OFFICE OF TECHNICAL SUPPORT SITE DEVELOPMENT UNIT TRANSPORTATION BUILDING ST. PAUL, MINNESOTA 55155-1899
PROJECT MANAGER: M. AARON	CHECKED BY: M. MOHS		PRINTED NAME: MICHAEL C. AARON		
			DATE: JUNE 23, 2010 LIC. NO.: 25721		

RELOCATION OF SHODDY MILL & WAREHOUSE BULIDINGS

Mn/DOT STANDARD EROSION & SEDIMENT CONTROL DETAILS

STATE PROJECT 8214-114Q (TH 36) | C303 | SHEET NO. 10 OF 28

LEGEND:

EXISTING GRADE

FINISHED GRADE

FUTURE TRAIL
1+50.00

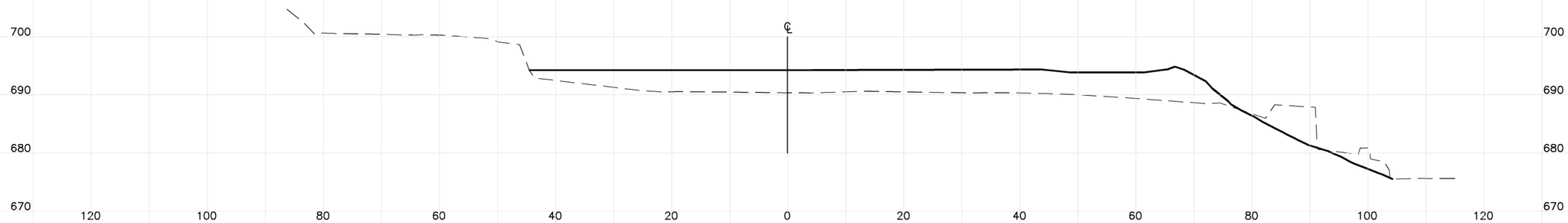

FUTURE TRAIL
1+25.00

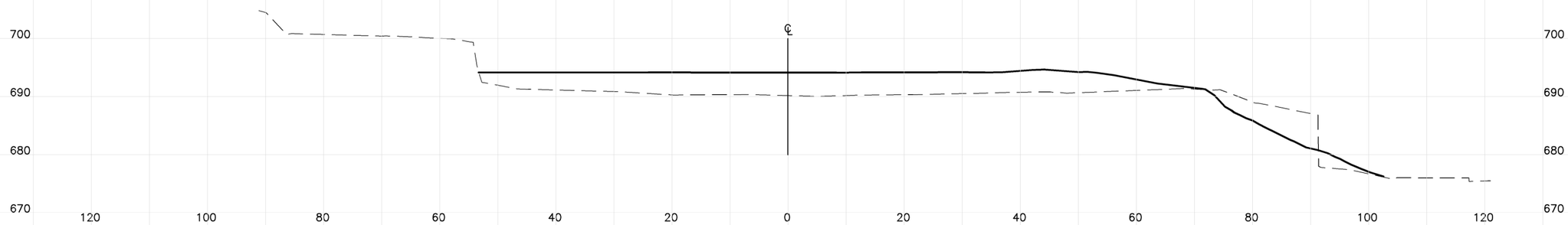

DATE MODIFIED: AUGUST 5, 2010	DRAWN BY: P. GALZKI		COLLABORATIVE DesignGroup, Inc. 100 Portland Avenue South, Suite 100 Minneapolis, Minnesota 55401 p 612.332.3654 f 612.332.3626 www.collaborativedesigngroup.com	STATE OF MINNESOTA DEPARTMENT OF TRANSPORTATION OFFICE OF TECHNICAL SUPPORT SITE DEVELOPMENT UNIT TRANSPORTATION BUILDING ST. PAUL, MINNESOTA 55155-1899	RELOCATION OF SHODDY MILL & WAREHOUSE BULIDINGS CROSS SECTIONS
PROJECT MANAGER: M. AARON	CHECKED BY: D. JULIFF				STATE PROJECT 8214-114Q (TH 36) / C312 / SHEET NO. 13 OF 28

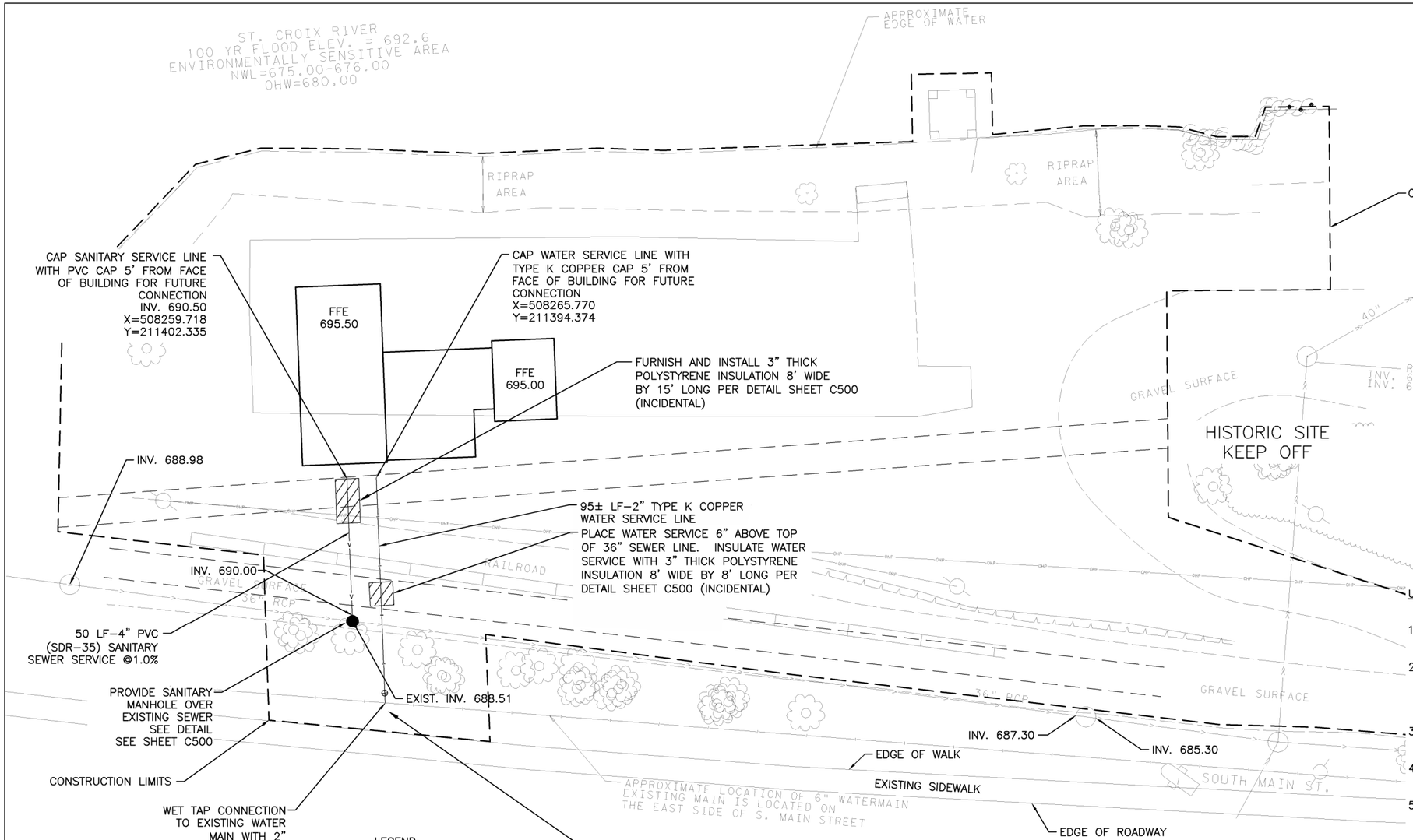

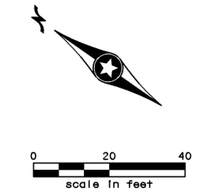

LEGEND

- PROPOSED WATER SERVICE
- PROPOSED SANITARY SERVICE
- EXISTING SANITARY SEWER
- EXISTING STORM SEWER
- EXISTING WATER MAIN
- EXISTING OVERHEAD POWER
- EXISTING POWER POLE
- EXISTING HYDRANT
- CONSTRUCTION LIMITS
- 2" DIA. CURB STOP AND BOX (CITY STANDARD)(INCIDENTAL)
- SANITARY MANHOLE

UTILITY PLAN NOTES:

1. CONTRACTOR SHALL PREPARE A SITE PLAN FOR UTILITY WORK, TO BE APPROVED BY THE ENGINEER.
2. THE SUBSURFACE UTILITY INFORMATION IN THIS PLAN IS UTILITY QUALITY LEVEL D. THIS QUALITY LEVEL WAS DETERMINED ACCORDING TO THE GUIDELINES OF CI/ASCE 38-2, ENTITLED "STANDARD GUIDELINES FOR THE COLLECTION AND DEPICTION OF EXISTING SUBSURFACE UTILITY DATA."
3. CONTACT GOPHER STATE ONE CALL PER STATE STATUTES FOR PUBLIC UTILITY LOCATES PRIOR TO ANY EXCAVATION.
4. THE CONTRACTOR SHALL BE SOLELY RESPONSIBLE FOR ALL UTILITY LOCATES.
5. FIELD VERIFY ALL UTILITY INVERTS PRIOR TO BEGINNING UTILITY INSTALLATIONS. NOTIFY ENGINEER OF ANY DISCREPANCIES FROM THE PLAN FOR RESOLUTION PRIOR TO BEGINNING UTILITY INSTALLATIONS.
6. COMPLY WITH ALL LOCAL AND STATE REQUIREMENTS FOR UTILITY INSTALLATION AND TESTING.
7. OBTAIN ALL APPROVALS FROM CITY OF STILLWATER PRIOR TO BEGINNING UTILITY INSTALLATIONS. PROVIDE 5 DAY NOTICE TO CITY OF STILLWATER PRIOR TO THE START OF UTILITY CONSTRUCTION. SEWER DEPARTMENT (651) 275-4107. BOARD OF WATER COMMISSIONERS (651) 439-6231.
8. MAINTAIN 8.0' OF COVER ON ALL NEW WATER SERVICE LINE EXCEPT WHERE INSULATED.
9. ADJUST, OR ARRANGE TO BE ADJUSTED BY UTILITY OWNER, ALL STRUCTURES, PUBLIC AND PRIVATE, TO PROPOSED GRADES WHERE DISTURBED. COMPLY WITH ALL REQUIREMENTS OF UTILITY OWNERS. STRUCTURES BEING RESET IN PAVED AREAS TO MEET OWNER'S REQUIREMENTS FOR TRAFFIC LOADING.
10. VERIFY ALL CONNECTIONS TO EXISTING UTILITY SERVICES PRIOR TO CONSTRUCTION.
11. ALL EXCAVATIONS MUST COMPLY WITH THE REQUIREMENTS OF OSHA 29 CFR, PART 1926, SUBPART P, "EXCAVATIONS AND TRENCHES." THIS DOCUMENT STATES THAT EXCAVATION SAFETY IS THE SOLE RESPONSIBILITY OF THE CONTRACTOR.

DATE MODIFIED: AUGUST 5, 2010	DRAWN BY: D. FITCHORN	I hereby certify that this plan was prepared by me or under my direct supervision and that I am a duly Licensed Professional Engineer under the laws of the State of Minnesota.	SIGNATURE:	COLLABORATIVE DesignGroup, Inc. 100 Portland Avenue South, Suite 100 Minneapolis, Minnesota 55401 p 612.332.3654 f 612.332.3626 www.collaborativedesigngroup.com	STATE OF MINNESOTA DEPARTMENT OF TRANSPORTATION OFFICE OF TECHNICAL SUPPORT SITE DEVELOPMENT UNIT TRANSPORTATION BUILDING ST. PAUL, MINNESOTA 55155-1899
PROJECT MANAGER: M. AARON	CHECKED BY: M. MOHS		PRINTED NAME: MICHAEL C. AARON		
			DATE: JUNE 23, 2010 LIC. NO.: 25721		

RELOCATION OF SHODDY MILL & WAREHOUSE BULIDINGS

UTILITY PLAN

STATE PROJECT 8214-114Q (TH 36) | C400 | SHEET NO. 19 OF 28

NOTES:

1. EROSION CONTROL BLANKET FOR DITCHES AND SLOPES 1:3 AND STEEPER.
2. DISK ANCHORED MULCH FOR AREAS FLATTER THAN 1:3.

LEGEND

695	PROPOSED CONTOUR
690	EXISTING CONTOUR
	HYDRO-SEED COMPOST-GROUTED RIPRAP AND BANK ABOVE WITH BWSR MIX R1. SEE SPEC. 2575.
	SEED INFILTRATION BASINS WITH MN/DOT SEED MIX 328. SEE SPEC. 2575.
	AMEND TURF AREAS PER DETAIL 1/L100 SEED WITH LOW-MAINTENANCE "NO MOW" SEED MIX. SEE SPEC. 2575.
	SEED DISTURBED AREA WITH LOW-MAINTENANCE "NO MOW" SEED MIX. SEE SPEC. 2575.

0 20 40
scale in feet

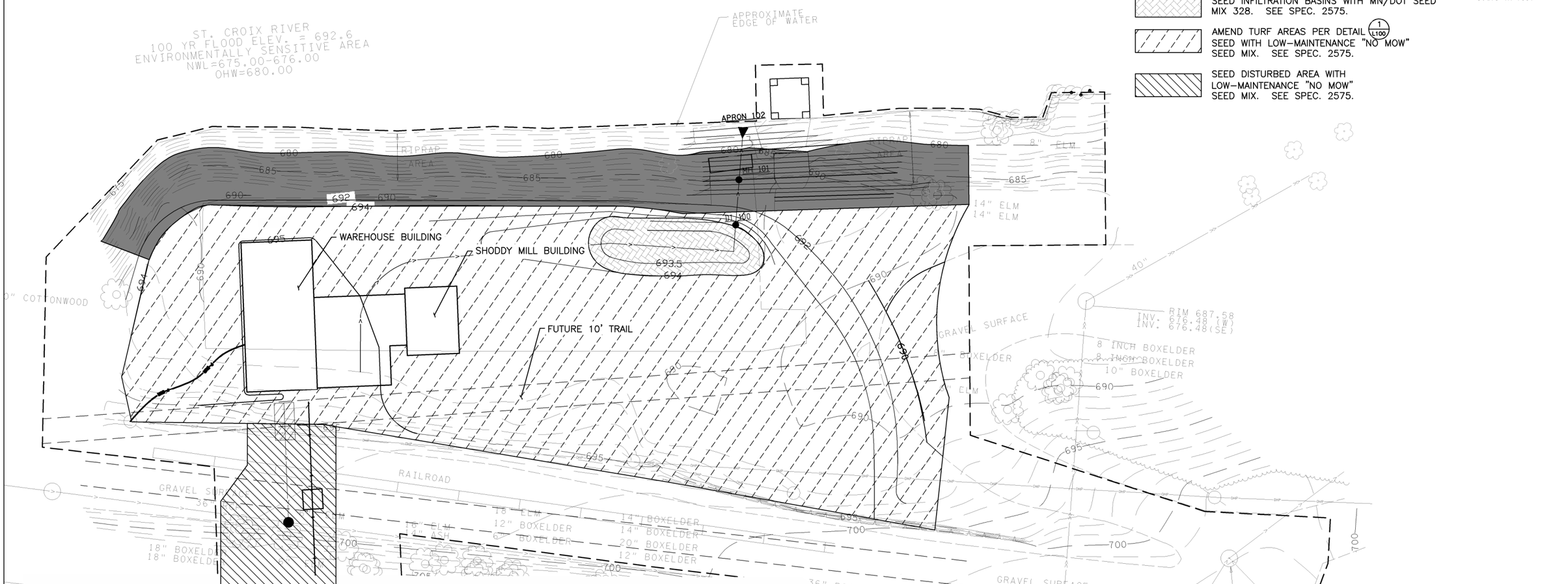

OPERATIONS:

1. SPADE 12 INCHES.
2. PLACE FILL IN 10-INCH LIFTS THEN SPADE 12 INCHES USING PERPINDICULAR TWO-PASS SYSTEM. SEE GRADING PLANS FOR DEPTH OF FILL.
3. APPLY 3 INCHES MNDOT GRADE 2 COMPOST, SPREAD EVENLY.
4. TILL COMPOST INTO SOIL 12 INCHES USING SPADING MACHINE AND PERPENDICULAR TWO-PASS SYSTEM.
5. APPLY 2 INCHES MNDOT GRADE 2 COMPOST, SPREAD EVENLY.
6. APPLY 6 INCHES TOPSOIL OVER COMPOST, SPREAD EVENLY.
7. TILL TOPSOIL AND COMPOST 10 INCHES USING SPADING MACHINE AND PERPENDICULAR TWO-PASS SYSTEM.
8. SMOOTH SPADED TOPSOIL WITH AERO-VATOR (OR ENGINEER-APPROVED EQUIVALENT) AND SEED (SEE SPEC FOR APPLICATION RATE).

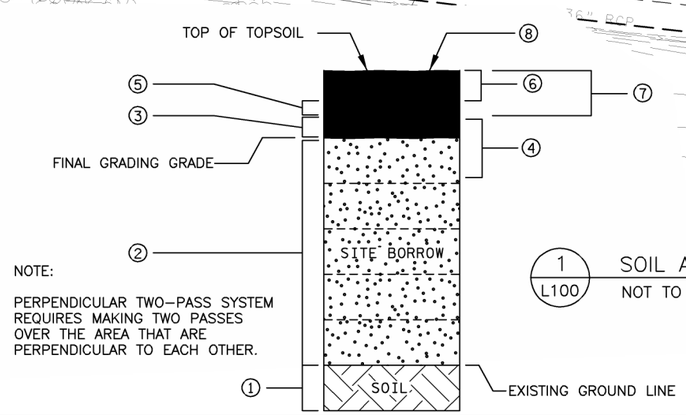

NOTE:

PERPENDICULAR TWO-PASS SYSTEM REQUIRES MAKING TWO PASSES OVER THE AREA THAT ARE PERPENDICULAR TO EACH OTHER.

1/L100 SOIL AMENDMENT AND CONDITIONING DETAIL
NOT TO SCALE

DATE MODIFIED: AUGUST 5, 2010	DRAWN BY: D. FITCHORN	I hereby certify that this plan was prepared by me or under my direct supervision and that I am a duly Licensed Professional Engineer under the laws of the State of Minnesota.	SIGNATURE:	COLLABORATIVE DesignGroup, Inc. 100 Portland Avenue South, Suite 100 Minneapolis, Minnesota 55401 p 612.332.3654 f 612.332.3626 www.collaborativedesigngroup.com	STATE OF MINNESOTA DEPARTMENT OF TRANSPORTATION OFFICE OF TECHNICAL SUPPORT SITE DEVELOPMENT UNIT TRANSPORTATION BUILDING ST. PAUL, MINNESOTA 55155-1899
PROJECT MANAGER: M. AARON	CHECKED BY: M. MOHS		PRINTED NAME: MICHAEL C. AARON		
			DATE: JUNE 23, 2010 LIC. NO.: 25721		

RELOCATION OF SHODDY MILL & WAREHOUSE BULIDINGS
LANDSCAPE PLAN

STATE PROJECT 8214-114Q (TH 36) | L100 | SHEET NO. 21 OF 28

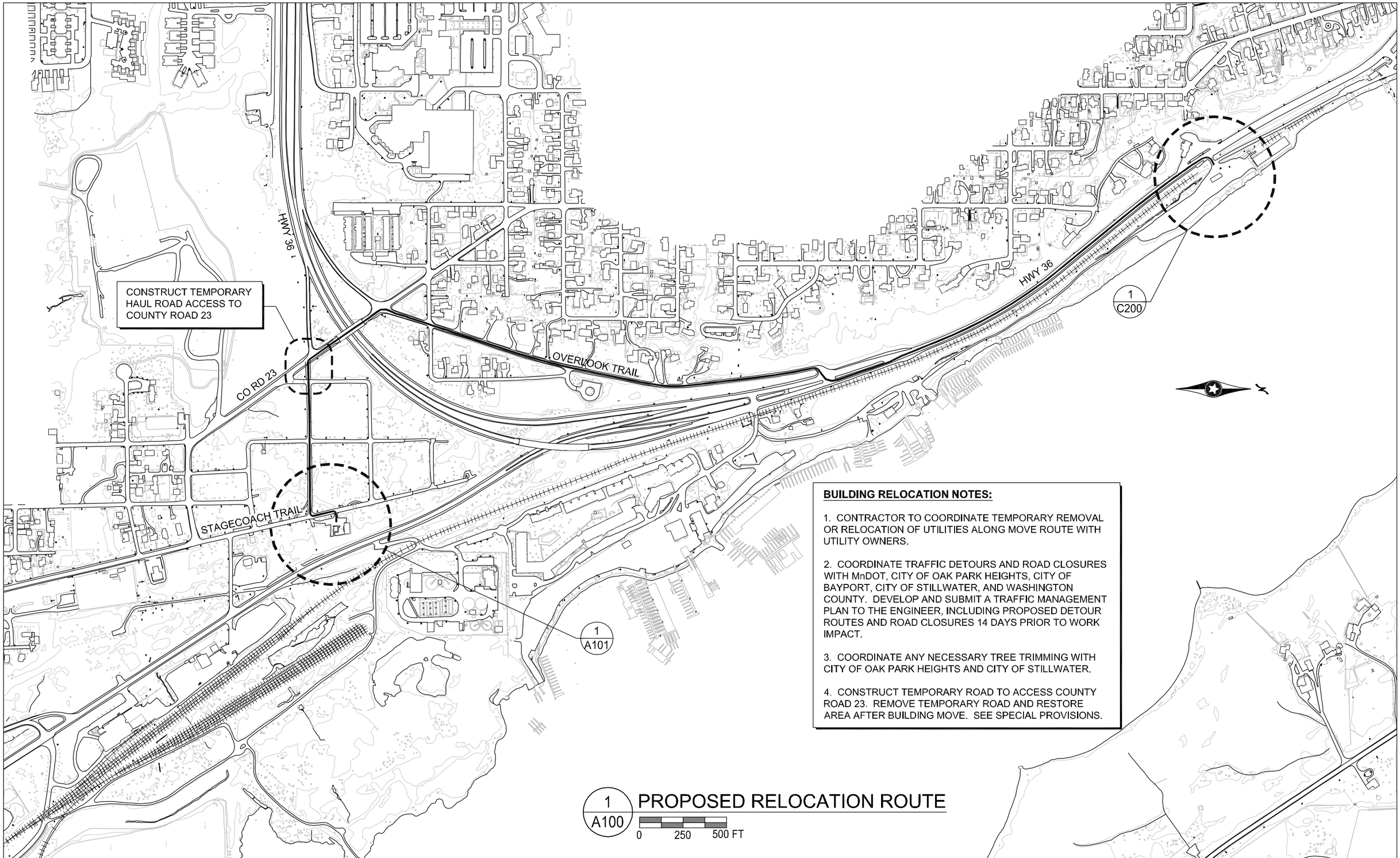

PROPOSED RELOCATION ROUTE

BUILDING RELOCATION NOTES:

1. CONTRACTOR TO COORDINATE TEMPORARY REMOVAL OR RELOCATION OF UTILITIES ALONG MOVE ROUTE WITH UTILITY OWNERS.

2. COORDINATE TRAFFIC DETOURS AND ROAD CLOSURES WITH MnDOT, CITY OF OAK PARK HEIGHTS, CITY OF BAYPORT, CITY OF STILLWATER, AND WASHINGTON COUNTY. DEVELOP AND SUBMIT A TRAFFIC MANAGEMENT PLAN TO THE ENGINEER, INCLUDING PROPOSED DETOUR ROUTES AND ROAD CLOSURES 14 DAYS PRIOR TO WORK IMPACT.

3. COORDINATE ANY NECESSARY TREE TRIMMING WITH CITY OF OAK PARK HEIGHTS AND CITY OF STILLWATER.

4. CONSTRUCT TEMPORARY ROAD TO ACCESS COUNTY ROAD 23. REMOVE TEMPORARY ROAD AND RESTORE AREA AFTER BUILDING MOVE. SEE SPECIAL PROVISIONS.

DATE MODIFIED: AUGUST 06, 2010	DRAWN BY: D. KIRTZ	I hereby certify that this plan was prepared by me or under my direct supervision and that I am a duly Licensed Architect under the laws of the State of Minnesota.	SIGNATURE:	COLLABORATIVE DesignGroup, Inc. 100 Portland Avenue South, Suite 100 Minneapolis, Minnesota 55401 p 612.332.3654 f 612.332.3626 www.collaborativedesigngroup.com	STATE OF MINNESOTA DEPARTMENT OF TRANSPORTATION OFFICE OF TECHNICAL SUPPORT SITE DEVELOPMENT UNIT TRANSPORTATION BUILDING ST. PAUL, MINNESOTA 55155-1899	RELOCATION OF SHODDY MILL & WAREHOUSE BUILDINGS PROPOSED RELOCATION ROUTE
PROJECT MANAGER: M.HAMRI	CHECKED BY: C. MILKERT		PRINTED NAME: WILLIAM D. HICKEY DATE: JULY 26, 2010 LIC. NO.: 20111			STATE PROJECT 8214-114Q (TH 36) | A100 | SHEET NO. 22 OF 28

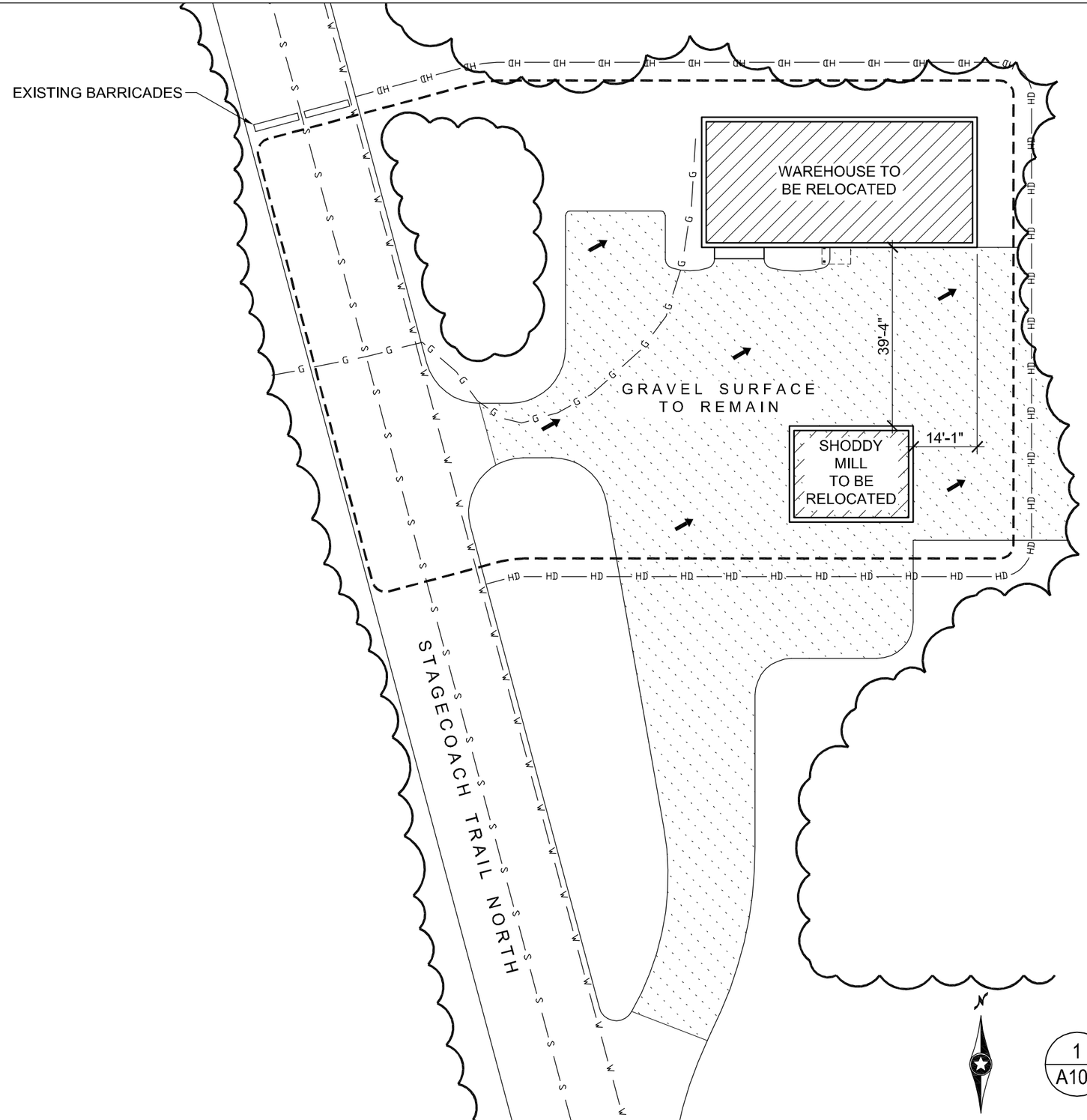

LEGEND

- CONSTRUCTION LIMITS
- DRAINAGE FLOW
- HD — HEAVY DUTY SILT FENCE
- W — EXISTING WATER LINE
- G — EXISTING GAS LINE
- S — EXISTING SANITARY LINE

SITE PREPARATION NOTES:

1. LOCATE AND DISCONNECT ALL EXISTING UTILITIES BACK TO MAINS.
2. INSTALL HEAVY DUTY SILT FENCE AT PERIMETER OF THE LIMITS OF CONSTRUCTION PRIOR TO COMMENCEMENT OF ANY WORK ON SITE.
3. REMOVE TREES AND VEGETATION AS REQUIRED TO RELOCATE BUILDINGS.
4. EXCAVATE AROUND PERIMETER OF BUILDINGS TO SALVAGE EXISTING FOUNDATION STONE BELOW GRADE. SEE SHEETS A200 AND A300. MOVE STONE TO NEW SITE FOR RE-CONSTRUCTION.
5. REMOVE ALL EXISTING CONCRETE SLABS AS SHOWN ON A200.
6. FILL AND GRADE BUILDING EXCAVATIONS TO MATCH EXISTING CONDITIONS OF SITE.
7. PROVIDE COMPACTION AND TURF ESTABLISHMENT PER SPECIFICATIONS. USE SAME LOW MAINTENANCE MIX AS AT NEW SITE (SEE L100).
8. FILL DISTURBED AREA OF ROAD WITH 6" OF CLASS V.
9. COORDINATE DISCONNECT & REMOVAL OF GAS LINE WITH THE UTILITY OWNER.

1 / A101 OVERALL SITE PLAN (OLD SITE)

0 10 25 FT

DATE MODIFIED: AUGUST 06, 2010	DRAWN BY: D. KIRTZ	I hereby certify that this plan was prepared by me or under my direct supervision and that I am a duly Licensed Architect under the laws of the State of Minnesota.	SIGNATURE:	COLLABORATIVE DesignGroup, Inc. 100 Portland Avenue South, Suite 100 Minneapolis, Minnesota 55401 p 612.332.3654 f 612.332.3626 www.collaborativedesigngroup.com	STATE OF MINNESOTA DEPARTMENT OF TRANSPORTATION OFFICE OF TECHNICAL SUPPORT SITE DEVELOPMENT UNIT TRANSPORTATION BUILDING ST. PAUL, MINNESOTA 55155-1899
PROJECT MANAGER: M.HAMRI	CHECKED BY: C. MILKERT		PRINTED NAME: WILLIAM D. HICKEY		
			DATE: JULY 26, 2010 LIC. NO.: 20111		

RELOCATION OF SHODDY MILL & WAREHOUSE BUILDINGS
OVERALL SITE PLAN (OLD SITE)

STATE PROJECT 8214-114Q (TH 36) | A101 | SHEET NO. 23 OF 28

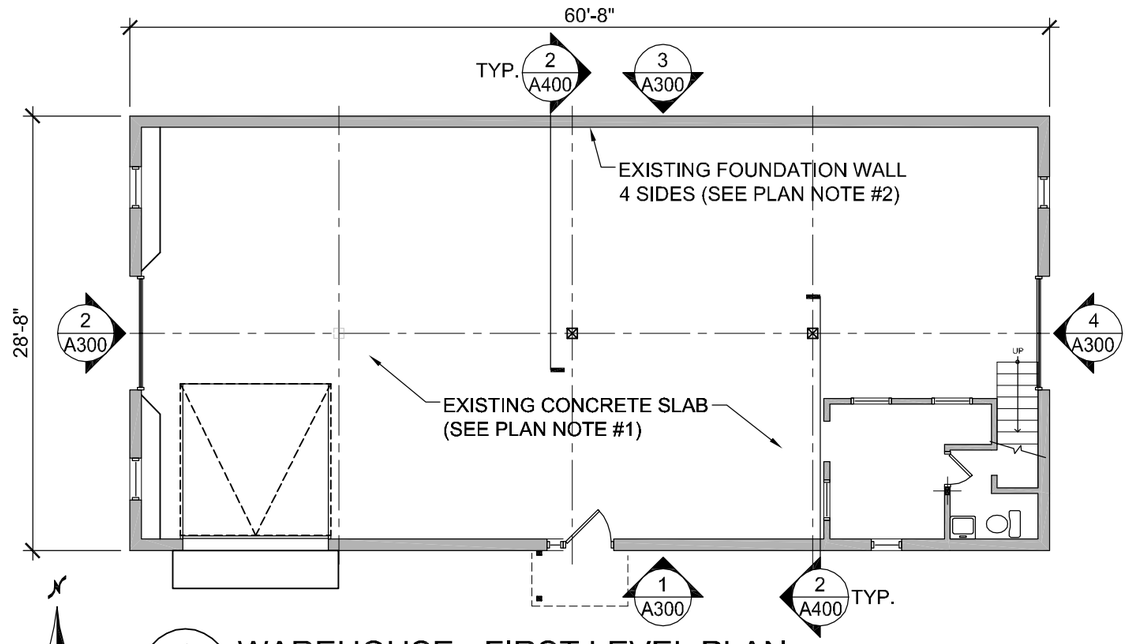

1 A200 WAREHOUSE - FIRST LEVEL PLAN

0 5 10 FT

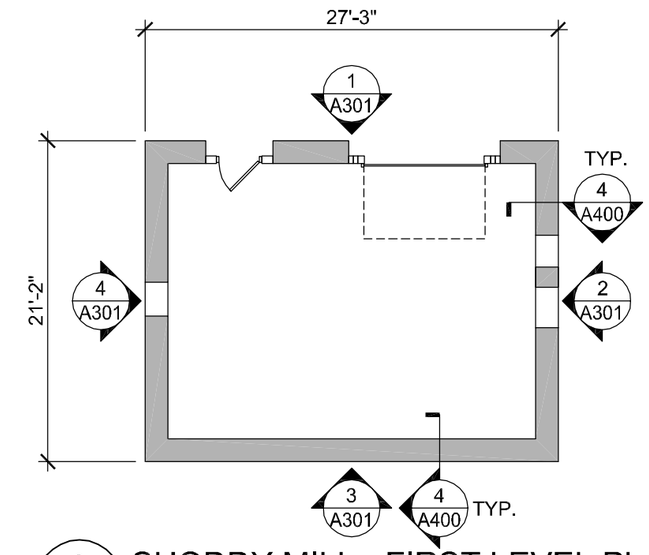

3 A200 SHODDY MILL - FIRST LEVEL PLAN

0 5 10 FT

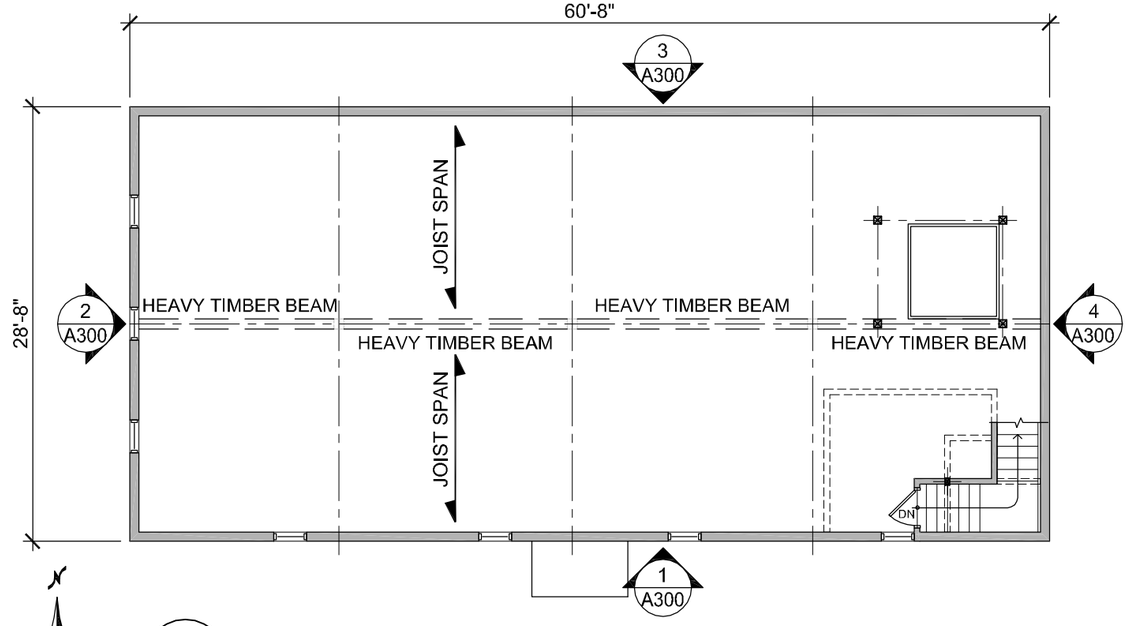

2 A200 WAREHOUSE - SECOND LEVEL PLAN

0 5 10 FT

BUILDING MOVE PREPARATION NOTES:

1. REMOVE EXISTING CONCRETE SLAB

2. SALVAGE, NUMBER, AND CATALOG EXISTING STONE FOUNDATION (1'-6" DEEP) FOR EXACT RECONSTRUCTION AT NEW SITE. SEE SHEETS A300 & A301.

DATE MODIFIED: AUGUST 06, 2010	DRAWN BY: D. KIRTZ	I hereby certify that this plan was prepared by me or under my direct supervision and that I am a duly Licensed Architect under the laws of the State of Minnesota.	SIGNATURE:	COLLABORATIVE DesignGroup, Inc. 100 Portland Avenue South, Suite 100 Minneapolis, Minnesota 55401 p 612.332.3654 f 612.332.3626 www.collaborativedesigngroup.com	STATE OF MINNESOTA DEPARTMENT OF TRANSPORTATION OFFICE OF TECHNICAL SUPPORT SITE DEVELOPMENT UNIT TRANSPORTATION BUILDING ST. PAUL, MINNESOTA 55155-1899
PROJECT MANAGER: M.HAMRI	CHECKED BY: C. MILKERT		PRINTED NAME: WILLIAM D. HICKEY		
			DATE: JULY 26, 2010 LIC. NO.: 20111		

RELOCATION OF SHODDY MILL & WAREHOUSE BUILDINGS

FLOOR PLANS

STATE PROJECT 8214-114Q (TH 36) | A200 | SHEET NO. 24 OF 28

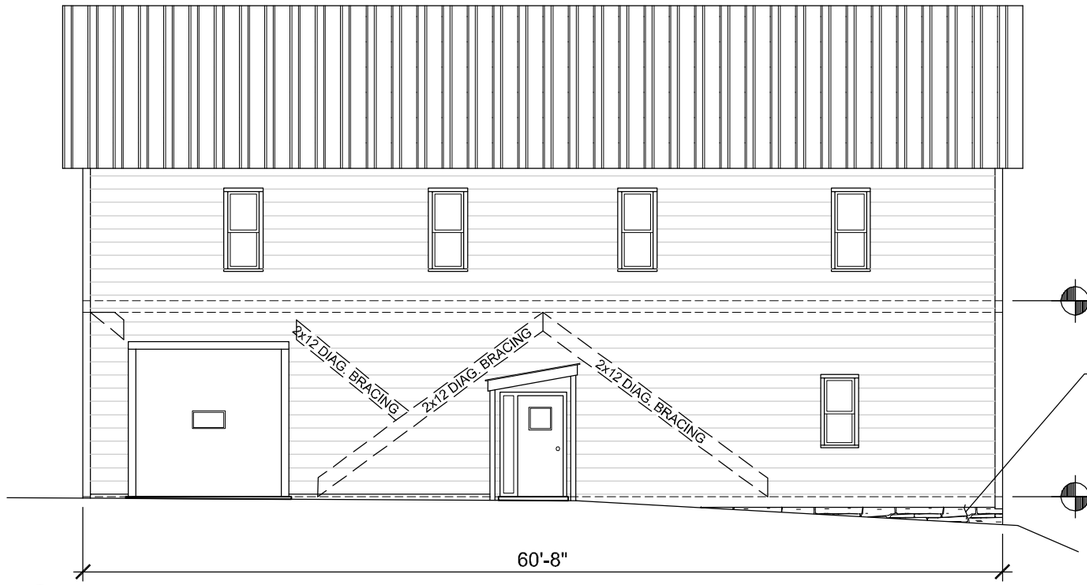

1 A300 WAREHOUSE - SOUTH ELEVATION

0 5 10 FT

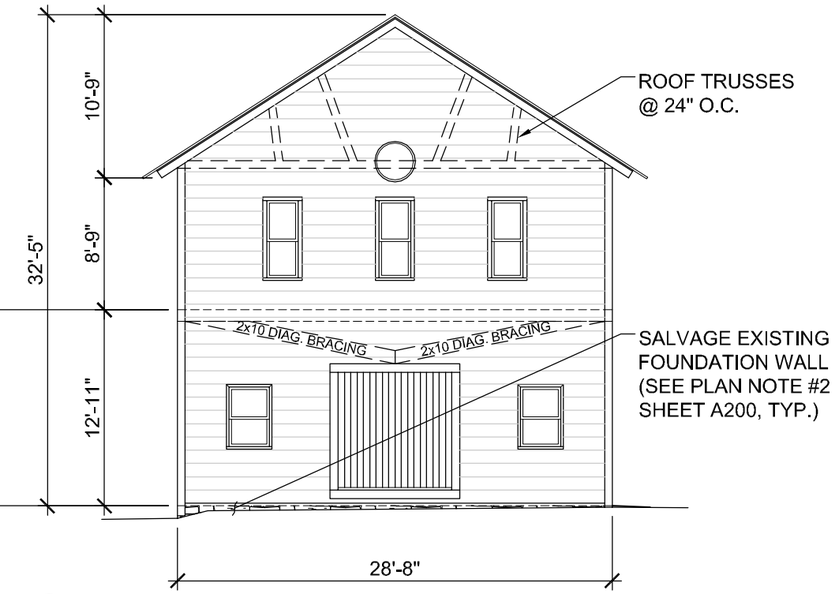

2 A300 WAREHOUSE - WEST ELEVATION

0 5 10 FT

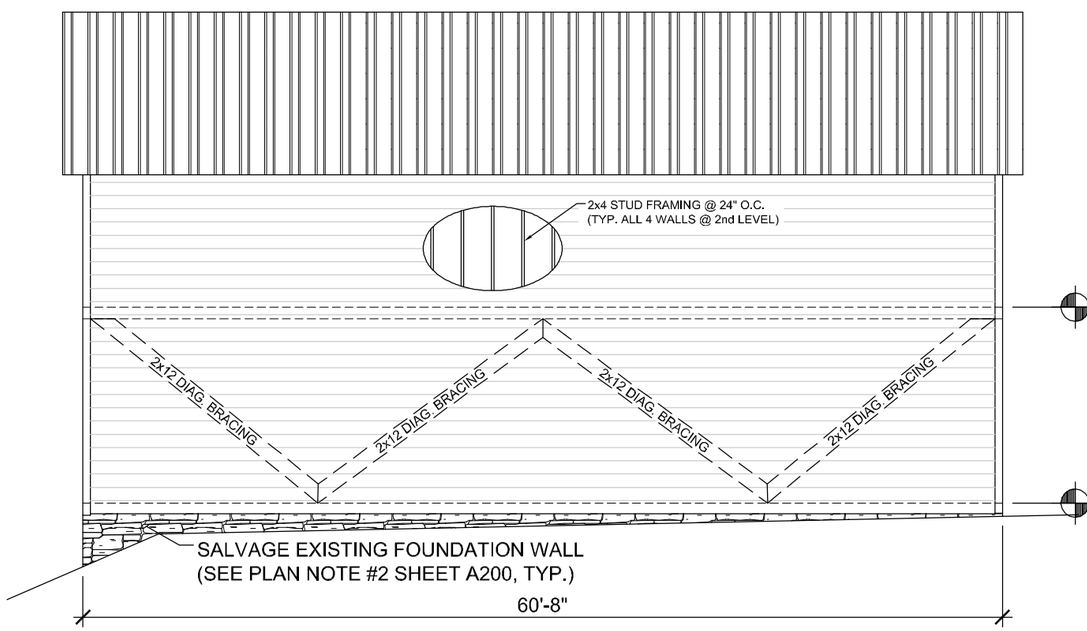

3 A300 WAREHOUSE - NORTH ELEVATION

0 5 10 FT

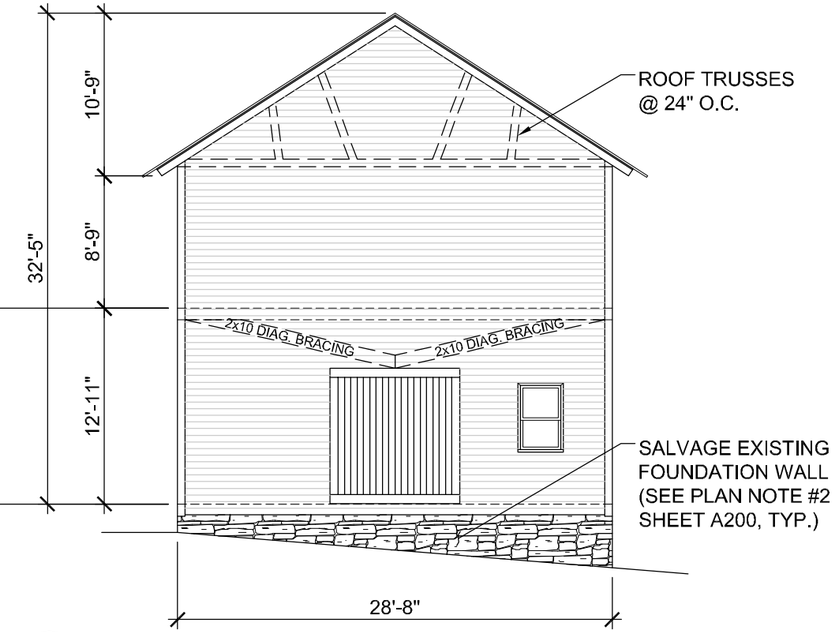

4 A300 WAREHOUSE - EAST ELEVATION

0 5 10 FT

DATE MODIFIED: AUGUST 06, 2010	DRAWN BY: D. KIRTZ	I hereby certify that this plan was prepared by me or under my direct supervision and that I am a duly Licensed Architect under the laws of the State of Minnesota.	SIGNATURE:	COLLABORATIVE DesignGroup, Inc. 100 Portland Avenue South, Suite 100 Minneapolis, Minnesota 55401 p 612.332.3654 f 612.332.3626 www.collaborativedesigngroup.com	STATE OF MINNESOTA DEPARTMENT OF TRANSPORTATION OFFICE OF TECHNICAL SUPPORT SITE DEVELOPMENT UNIT TRANSPORTATION BUILDING ST. PAUL, MINNESOTA 55155-1899	RELOCATION OF SHODDY MILL & WAREHOUSE BUILDINGS WAREHOUSE ELEVATIONS (OLD SITE)
PROJECT MANAGER: M.HAMRI	CHECKED BY: C. MILKERT		PRINTED NAME: WILLIAM D. HICKEY DATE: JULY 26, 2010 LIC. NO.: 20111			STATE PROJECT 8214-114Q (TH 36) | A300 | SHEET NO. 25 OF 28

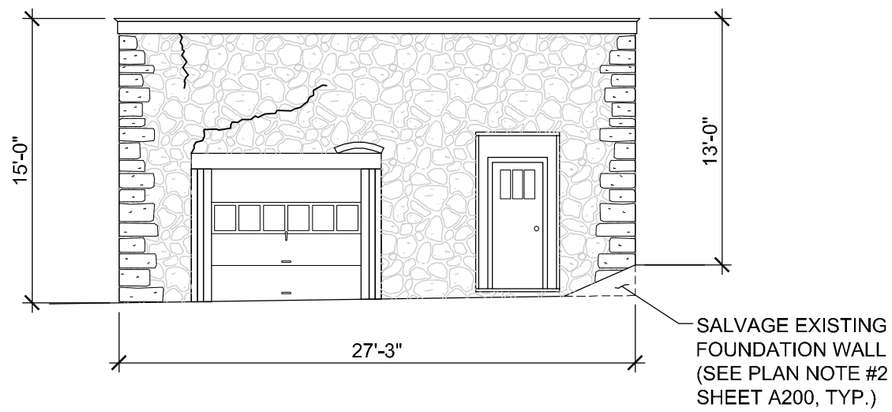

1 A301 SHODDY MILL - NORTH ELEVATION

0 2' 4' 8 FT

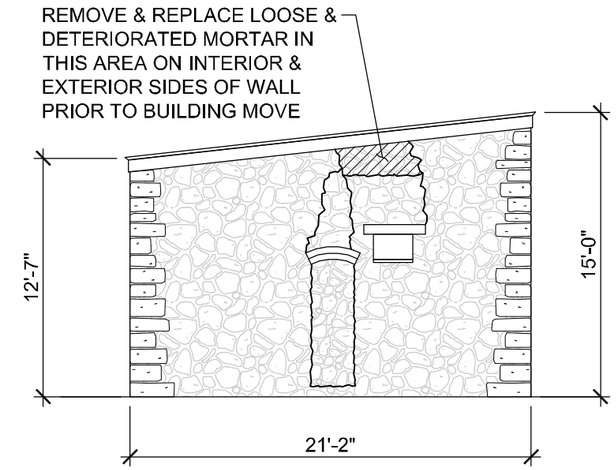

2 A301 SHODDY MILL - EAST ELEVATION

0 2' 4' 8 FT

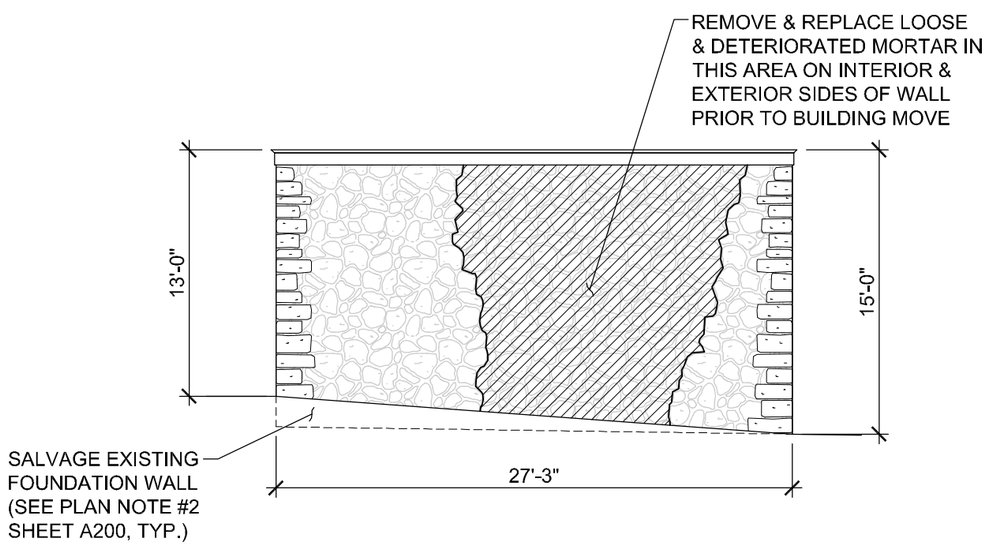

3 A301 SHODDY MILL - SOUTH ELEVATION

0 2' 4' 8 FT

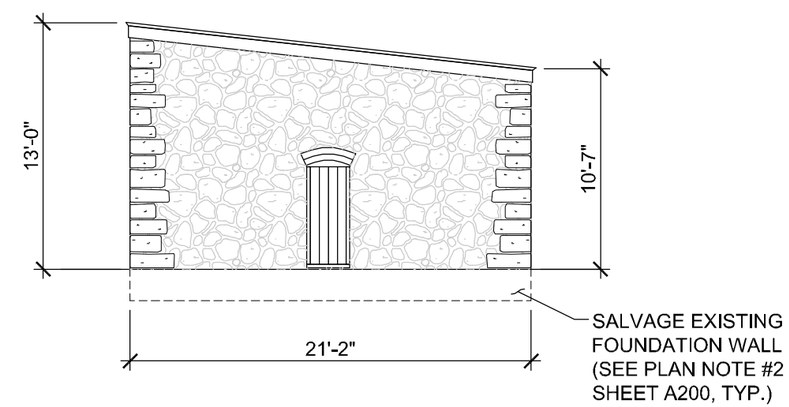

4 A301 SHODDY MILL - WEST ELEVATION

0 2' 4' 8 FT

DATE MODIFIED: AUGUST 06, 2010	DRAWN BY: D. KIRTZ	I hereby certify that this plan was prepared by me or under my direct supervision and that I am a duly Licensed Architect under the laws of the State of Minnesota.	SIGNATURE:	COLLABORATIVE DesignGroup, Inc. 100 Portland Avenue South, Suite 100 Minneapolis, Minnesota 55401 p 612.332.3654 f 612.332.3626 www.collaborativedesigngroup.com	STATE OF MINNESOTA DEPARTMENT OF TRANSPORTATION OFFICE OF TECHNICAL SUPPORT SITE DEVELOPMENT UNIT TRANSPORTATION BUILDING ST. PAUL, MINNESOTA 55155-1899	RELOCATION OF SHODDY MILL & WAREHOUSE BUILDINGS SHODDY MILL ELEVATIONS (OLD SITE)
PROJECT MANAGER: M.HAMRI	CHECKED BY: C. MILKERT		PRINTED NAME: WILLIAM D. HICKEY			STATE PROJECT 8214-114Q (TH 36) / A301 / SHEET NO. 26 OF 28
			DATE: JULY 26, 2010 LIC. NO.: 20111			

THIS CONDITION OCCURS @ NORTH WALL ONLY

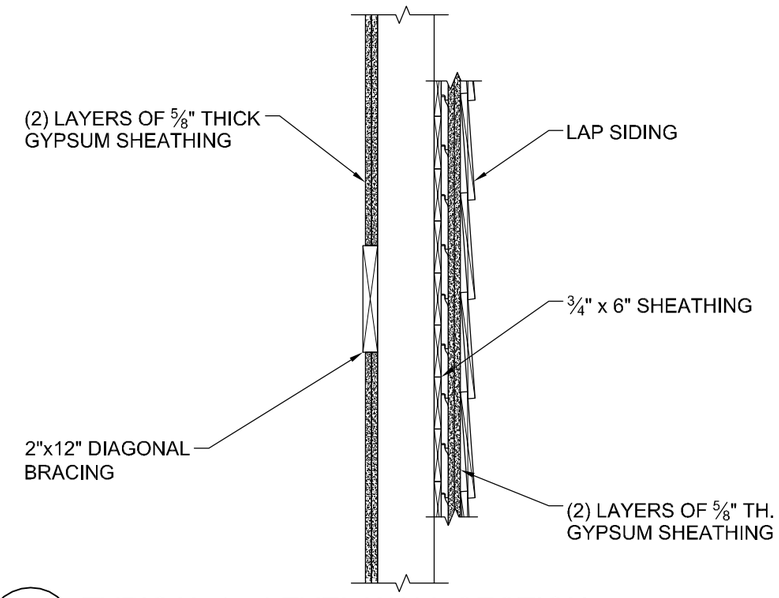

1 A400 TYPICAL 1st LEVEL WALL SECTION

SCALE: N.T.S.

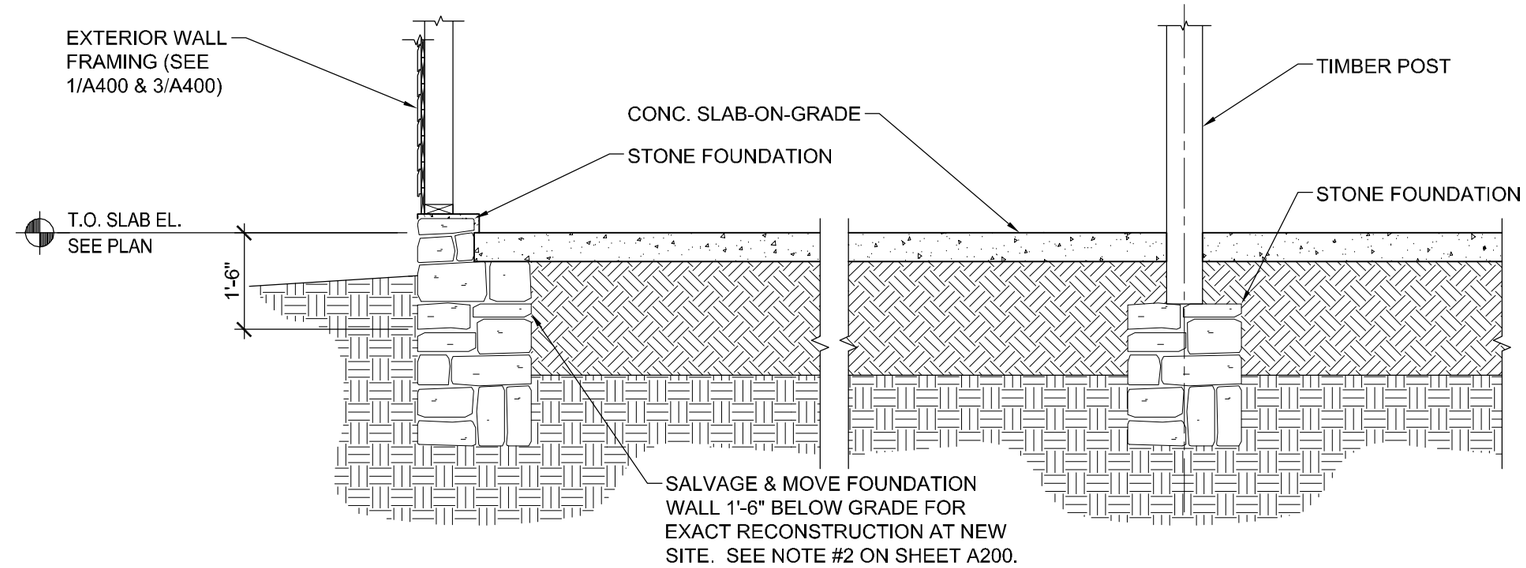

2 A400 WAREHOUSE - TYPICAL EXISTING FOUNDATION / FLOOR SLAB

SCALE: N.T.S.

THIS CONDITION OCCURS @ NORTH WALL ONLY

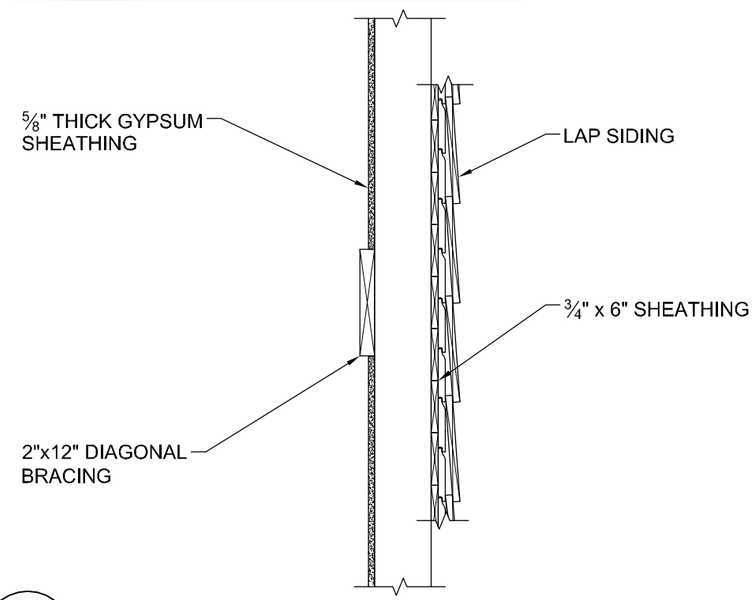

3 A400 TYPICAL 1st LEVEL WALL SECTION

SCALE: N.T.S.

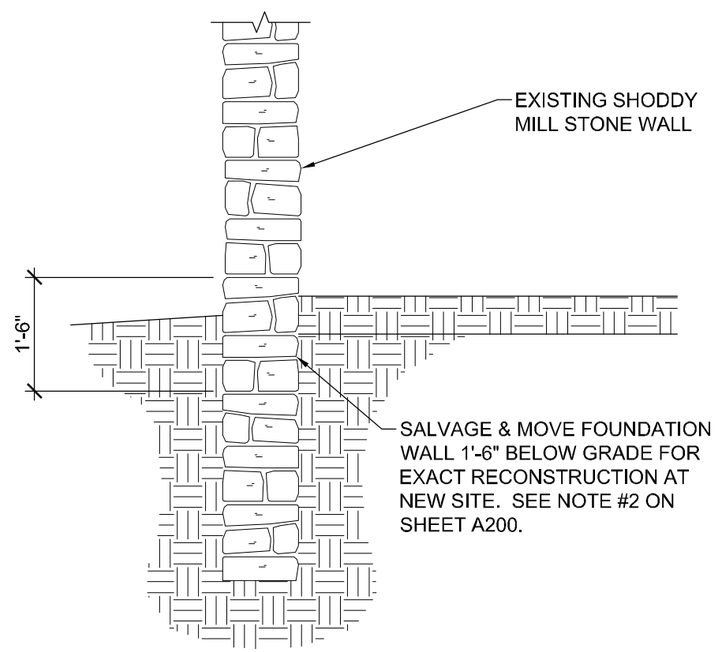

4 A400 SHODDY MILL - TYPICAL EXISTING FOUNDATION

SCALE: N.T.S.

DATE MODIFIED: AUGUST 06, 2010	DRAWN BY: D. KIRTZ	I hereby certify that this plan was prepared by me or under my direct supervision and that I am a duly Licensed Architect under the laws of the State of Minnesota.	SIGNATURE:	COLLABORATIVE DesignGroup, Inc. 100 Portland Avenue South, Suite 100 Minneapolis, Minnesota 55401 p 612.332.3654 f 612.332.3626 www.collaborativedesigngroup.com	STATE OF MINNESOTA DEPARTMENT OF TRANSPORTATION OFFICE OF TECHNICAL SUPPORT SITE DEVELOPMENT UNIT TRANSPORTATION BUILDING ST. PAUL, MINNESOTA 55155-1899
PROJECT MANAGER: M.HAMRI	CHECKED BY: C. MILKERT		PRINTED NAME: WILLIAM D. HICKEY		
			DATE: JULY 26, 2010 LIC. NO.: 20111		

RELOCATION OF SHODDY MILL & WAREHOUSE BUILDINGS

WALL SECTIONS & DETAILS (OLD SITE)

STATE PROJECT 8214-114Q (TH 36) | A400 | SHEET NO. 27 OF 28

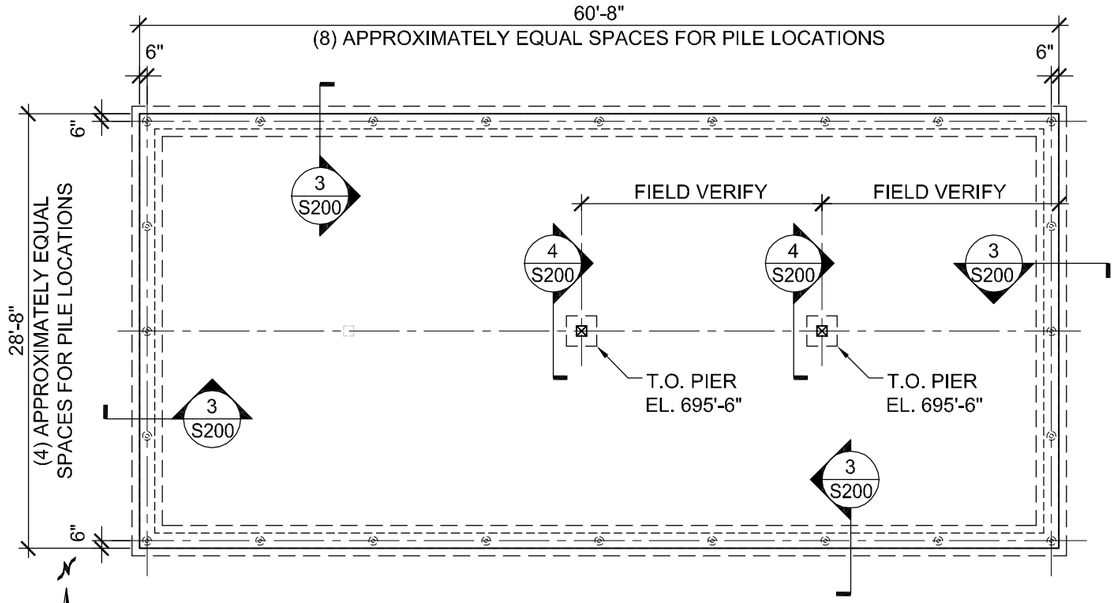

1 S200 WAREHOUSE - NEW FOUNDATION PLAN

0 5 10 FT

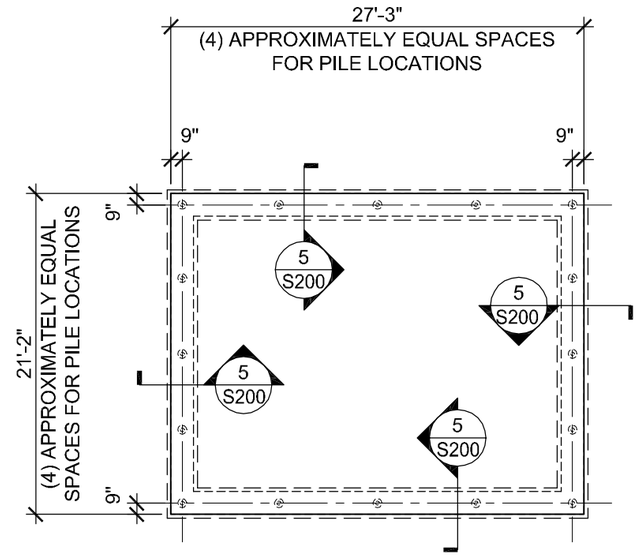

2 S200 SHODDY MILL - NEW FOUNDATION PLAN

0 5 10 FT

FOUNDATION PLAN NOTES

1. FIELD VERIFY ALL DIMENSIONS

2. HELICAL PIERS SHALL BE INSTALLED TO ACHIEVE AN UNFACTORED DESIGN LOAD OF 17 KIPS EACH. INSTALL IN LOCATIONS AS SHOWN, SPACED EQUALLY ALONG THE LENGTH OF THE NEW FOUNDATION. OBTAIN APPROVAL OF SHOP DRAWINGS PRIOR TO INSTALLATION.

3. SEE DRAWING C200 FOR BUILDING LOCATION.

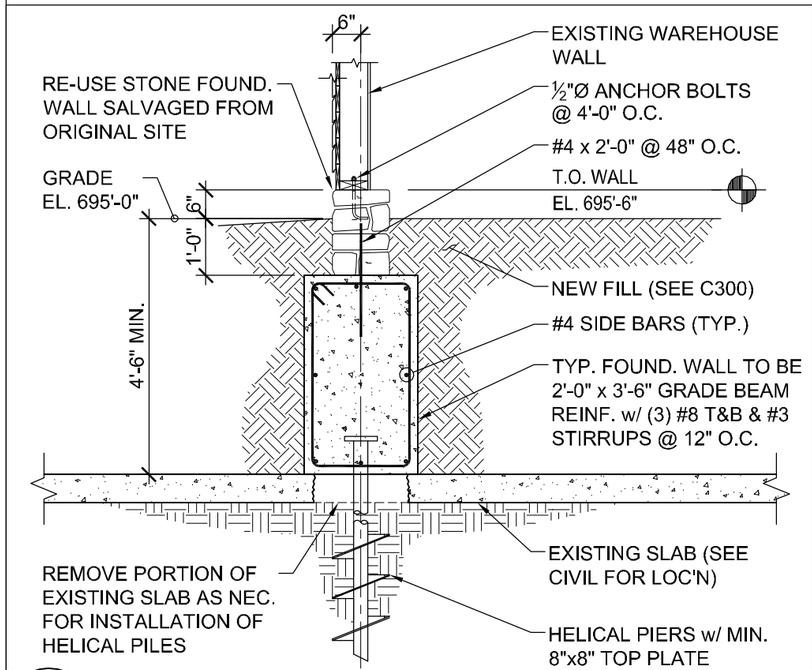

3 S200 TYPICAL FOUNDATION DETAIL

SCALE: N.T.S.

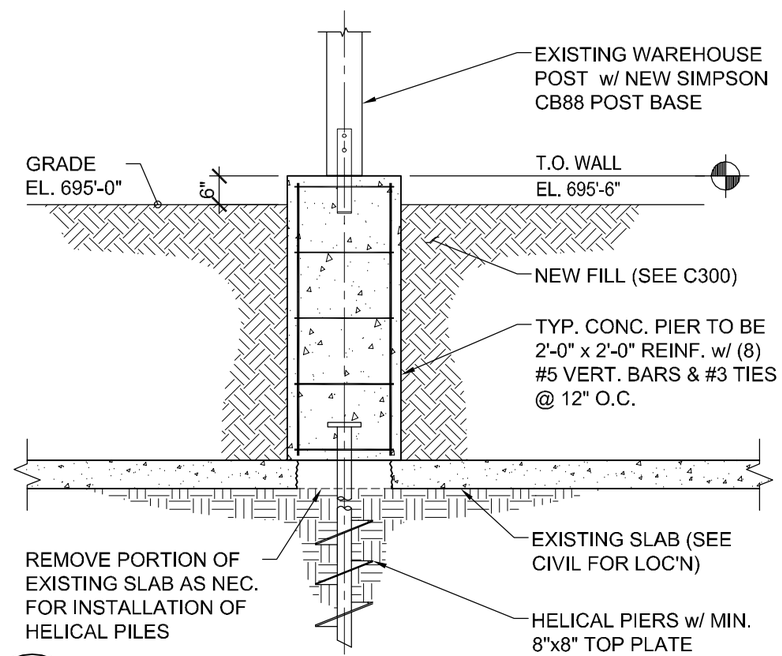

4 S200 TYPICAL PIER DETAIL

SCALE: N.T.S.

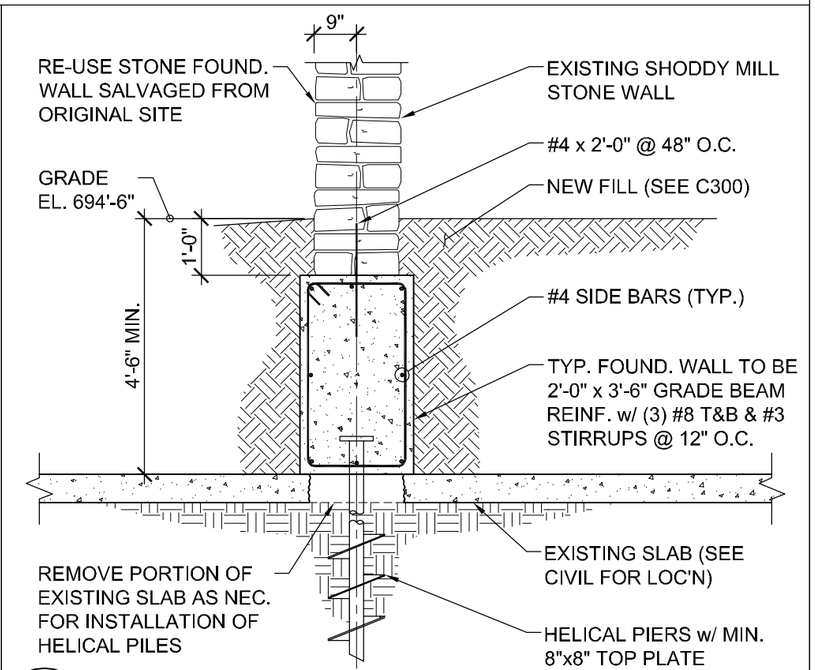

5 S200 TYPICAL FOUNDATION DETAIL

SCALE: N.T.S.

DATE MODIFIED: AUGUST 06, 2010	DRAWN BY: D. KIRTZ	I hereby certify that this plan was prepared by me or under my direct supervision and that I am a duly Licensed Architect under the laws of the State of Minnesota.	SIGNATURE:	COLLABORATIVE DesignGroup, Inc. 100 Portland Avenue South, Suite 100 Minneapolis, Minnesota 55401 p 612.332.3654 f 612.332.3626 www.collaborativedesigngroup.com	STATE OF MINNESOTA DEPARTMENT OF TRANSPORTATION OFFICE OF TECHNICAL SUPPORT SITE DEVELOPMENT UNIT TRANSPORTATION BUILDING ST. PAUL, MINNESOTA 55155-1899
PROJECT MANAGER: M.HAMRI	CHECKED BY: C. MILKERT		PRINTED NAME: WILLIAM D. HICKEY		
			DATE: JULY 26, 2010 LIC. NO.: 20111		

RELOCATION OF SHODDY MILL & WAREHOUSE BUILDINGS
FOUNDATION PLAN & DETAILS (NEW SITE)

STATE PROJECT 8214-114Q (TH 36) | S200 | SHEET NO. 28 OF 28