MINNESOTA DEPARTMENT OF TRANSPORTATION

CONSTRUCTION PLAN FOR LAKE CITY CONCOURSE RESTORATION

LOCATED ON T.H. 61 FROM 73.8 TO 73.4

STATE PROJ. NO. 7906-78
MINN. PROJ. NO.
GROSS LENGTH 1500 FEET MILES
BRIDGES-LENGTH FEET MILES
EXCEPTIONS-LENGTH FEET MILES
NET LENGTH 1500 FEET MILES
REF. POINT 73.8 TO REF. POINT 73.4

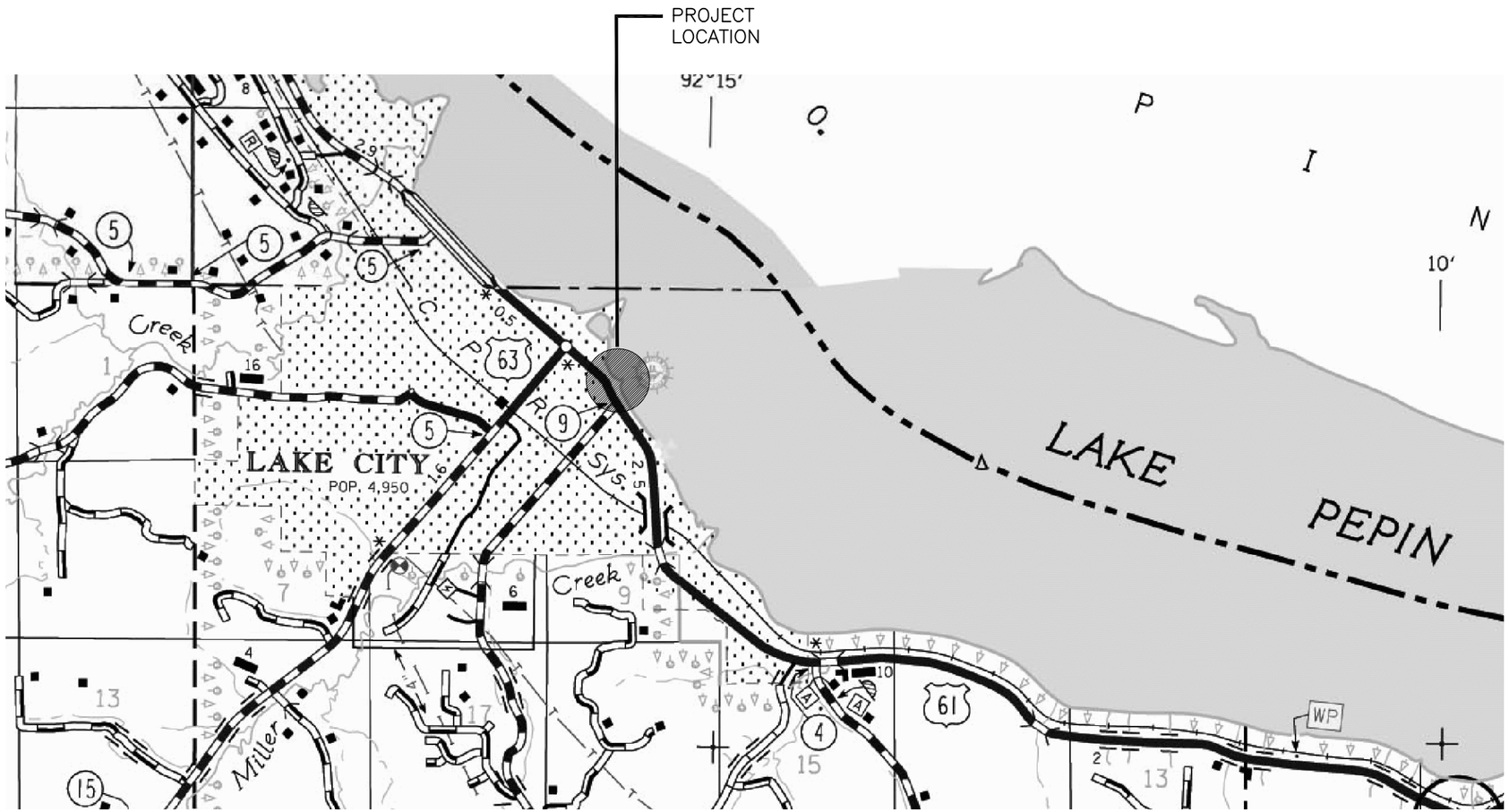

FOR PLANS & UTILITIES SYMBOLS SEE TECHNICAL MANUAL

PROJ. NO CHARGE IDENTIFIER

PLAN REVISIONS		
DATE	SHEET NO.	APPROVED BY

DESIGN DESIGNATION – TIER NO.

PROJECT LOCATION
COUNTY : WABASHA
DISTRICT : SIX

STATE FUNDS

GOVERNING SPECIFICATIONS
THE 2005 EDITION OF THE MINNESOTA DEPARTMENT OF TRANSPORTATION "STANDARD SPECIFICATIONS FOR CONSTRUCTION" SHALL GOVERN.

INDEX

SHEET NO.	SHEET NAME
1	TITLE SHEET
2	STATEMENT OF ESTIMATED QUANTITIES AND TABULATIONS
3	OVERALL SITE PLAN
4	CONSTRUCTION PHASING PLAN
5	TRAFFIC CONTROL PLAN
6	STORM WATER POLLUTION PREVENTION PLAN (SWPPP)
7	STORM WATER POLLUTION PREVENTION PLAN LAYOUT PLAN
8	STORM WATER POLLUTION PREVENTION PLAN DETAILS
9	STORM WATER POLLUTION PREVENTION PLAN DETAILS
10	PROTECTION AND RESTORATION OF VEGETATION
11	DRAINAGE TABULATIONS AND STANDARD PLATES
12	CATCH BASIN STATION POINT 28+85
13	CATCH BASIN STATION POINT 33+19
14	CATCH BASIN STATION POINT 37+24
15	REMOVALS PLAN
16	SITE LAYOUT AND PLANTING PLAN
17	WALL A2 GRADING PLAN
18-19	SITE DETAILS
20	RAINGARDEN DETAILS AND DRAIN TILE SECTION
21-22	WALL A1 CONSTRUCTION PLAN AND PHOTO ELEVATIONS
23-27	WALL A2 CONSTRUCTION PLAN AND PHOTO ELEVATIONS
28-29	WALL A3 CONSTRUCTION PLAN AND PHOTO ELEVATIONS
30-31	WALL B CONSTRUCTION PLAN AND PHOTO ELEVATIONS
32-33	WALL C CONSTRUCTION PLAN AND PHOTO ELEVATIONS
34	WALL DETAILS
35-36	STRUCTURAL DETAILS AND SPECIFICATIONS
37-38	ELECTRICAL DETAILS

THIS PLAN CONTAINS 38 SHEETS

I HEREBY CERTIFY THAT THIS PLAN WAS PREPARED BY ME OR UNDER MY DIRECT SUPERVISION AND THAT I AM A DULY LICENSED ARCHITECT UNDER THE LAWS OF THE STATE OF MINNESOTA.

PRINT NAME: TODD GROVER LIC. NO.: 43014
DATE: SIGNATURE:

I HEREBY CERTIFY THAT THIS PLAN WAS PREPARED BY ME OR UNDER MY DIRECT SUPERVISION AND THAT I AM A DULY LICENSED PROFESSIONAL LANDSCAPE ARCHITECT UNDER THE LAWS OF THE STATE OF MINNESOTA.

PRINT NAME: DEB BARTLES LIC. NO.: XXXXX
DATE: DATE SIGNATURE:

I HEREBY CERTIFY THAT THIS PLAN WAS PREPARED BY ME OR UNDER MY DIRECT SUPERVISION AND THAT I AM A DULY LICENSED STRUCTURAL ENGINEER UNDER THE LAWS OF THE STATE OF MINNESOTA.

PRINT NAME: DAVID MACDONALD LIC. NO.: 14751
DATE: 7/1/2009 SIGNATURE:

DATE MODIFIED: APRIL 12, 2010
DRAWN BY: ALM
CHECKED BY: TAG
FILE SERVER LOCATION: M:\Projects\Roadside Properties\South\Lake City Concourse\Drawings\Lake City Concourse.dwg

I HEREBY CERTIFY THAT THIS PLAN WAS PREPARED BY ME OR UNDER MY DIRECT SUPERVISION AND THAT I AM A DULY LICENSED ARCHITECT UNDER THE LAWS OF THE STATE OF MINNESOTA.

SIGNATURE:
PRINTED NAME: TODD GROVER
DATE: APRIL 12, 2010 LIC. NO. 43014

MACDONALD & MACK ARCHITECTS

STATE OF MINNESOTA
DEPARTMENT OF TRANSPORTATION

TRANSPORTATION BUILDING
ST. PAUL, MINNESOTA 55155-1899

LAKE CITY CONCOURSE – CITY OF LAKE CITY
TITLE SHEET

STATE PROJECT 7906-78 T.H. 61

STATEMENT OF ESTIMATED QUANTITIES

ITEM NO.	ITEM		S.P. 7906-78 QUANTITIES ESTIMATED	S.P. 7906-78 QUANTITIES FINAL
2021.501	MOBILIZATION (1)	LS	1	
2100.601	CONSTRUCT STAIRWAY	LS	1	
2104.501	REMOVE CURB AND GUTTER	LF	30	
2104.501	REMOVE CONCRETE BLOCK WALL	LF	450	
2104.501	REMOVE HANDRAIL	LF	40	
2104.501	REMOVE SEWER PIPE (STORM)	LF	90	
2104.503	REMOVE BITUMINOUS PAVEMENT	SF	9300	
2104.503	REMOVE CONCRETE SIDEWALK (2)	SF	772	
2104.507	REMOVE CONCRETE STEPS	CY	4	
2104.509	REMOVE MANHOLE OR CATCH BASIN	EA	3	
2104.509	REMOVE CASTING	EA	3	
2104.513	SAWING BIT PAVEMENT (FULL DEPTH)	LF	187	
2104.604	SALVAGE LANDSCAPE ROCK (3)	SY	147	
2105.501	COMMON EXCAVATION	CY	363	
2105.526	SELECT TOPSOIL BORROW MOD (4)	CY	25	
2105.601	GRADING	LS	1	
2105.602	SOIL BORING (5)	EA	1	
2105.604	NON-WOVEN GEOTEXTILE FABRIC - TYPE 3 (6)	SY	741	
2112.604	SUBGRADE PREPARATION	SY	1321	
2211.503	AGGREGATE BASE (CV) CLASS 5	CY	750	
2360.503	PLANT MIXED ASPHALT PAVEMENT - 2" THICK (7)	SY	1735	
2402.585	PIPE RAIL (8)	LF	56	
2451.509	AGGREGATE BEDDING (CV)	CY	9	
2451.603	TRENCH EXCAVATION	LF	20	
2501.515	15" RC PIPE APRON	EA	1	
2502.521	18" RC PIPE APRON	EA	2	
2502.521	6" TP PIPE DRAIN	LF	90	
2502.521	6" TP PERF PIPE DRAIN	LF	41	
2503.541	15" RC PIPE SEWER DES 3006	LF	26	
2503.541	18" RC PIPE SEWER DES 3006	LF	53	
2506.501	CONSTRUCT DRAINAGE STRUCTURE DESIGN A OR F	LF	19	
2506.516	CASTING ASSEMBLY	EA	3	
2511.501	RIPRAP CLASS IV	CY	21	
2511.515	GEOTEXTILE FILTER TYPE IV	SY	41	
2521.501	4" CONCRETE WALK	SF	3393	
2531.502	B624 CURB AND GUTTER	LF	30	
2531.603	INSTALL STONE CURB (9)	LF	240	
2531.618	PEDESTRIAN CURB RAMP (10)	LS	1	
2540.604	INSTALL LANDSCAPE ROCK	SY	147	
2541.603	RESTORE HISTORIC CURB (11)	LF	237	
2554.509	GUIDE POST TYPE B	EA	3	
2573.530	STORM DRAIN INLET PROTECTION	EA	6	
2575.501	SEEDING	ACRE	.1	
2575.502	SEED MIXTURE 260	LB	10	
2575.505	SODDING TYPE SALT RESISTANT (12)	SY	425	
2575.601	EROSION CONTROL - SWPPP (13)	LS	1	
2540.601	STONE WALL RESTORATION (14)	LS	1	

STATEMENT OF ESTIMATED QUANTITIES NOTES:

1. FOR THIS PROJECT MOBILIZATION INCLUDES BUT IS NOT LIMITED TO ALL REQUIRED TRAFFIC CONTROL AND PEDESTRIAN CONTROL DEVICES. SEE SPECIAL PROVISIONS SP-2.
2. SALVAGE TOP 3 STONES FOR REUSE AS SALVAGED STONE IN THE WALLS. SEE SHEET 18.
3. SALVAGE ROCK AND DELIVER TO LAKE CITY. COORDINATE WITH MN/DOT PROJECT MANAGER FOR DELIVERY INSTRUCTIONS.
4. SPECIAL SOIL MIX FOR RAINGARDEN SOIL.
5. DIRECTIONAL BORE SCHEDULE 40 PVC FROM RAINGARDEN TO RIP RAP FOR RAINGARDEN DRAINAGE. 85 FEET.
6. FOR USE AT RAINGARDEN, NOT FOR USE AS EROSION CONTROL.
7. 2 LIFTS OF 2" FOR DRIVE AND PATCHING AT CATCH BASIN WORK.
8. INCLUDES THE INSTALLATION OF THE PIPE RAIL AND CONCRETE FOOTING FOR RAIL, SEE SHEET 18.
9. INCLUDES THE INSTALLATION OF NEW LIMESTONE CURB TO MATCH EXISTING FOR THE INTERIOR CIRCULAR WALK. NEW MATERIAL IS AVAILABLE FROM MN/DOT SALVAGED LIMESTONE. THE CONTRACTOR WILL BE RESPONSIBLE FOR COORDINATING WITH WILLIAM SHEGSTAD, MN/DOT MENDOTA MAINTENANCE OFFICE, WILLIAM.SHEGSTAD@DOT.STATE.MN.US OFFICE: 651-406-4734 CELL: 651-775-0354 FAX: 651-406-4732 TO PICK UP THE MATERIALS LOCATED AT 8701 COURTHOUSE BLVD. INVER GROVE HEIGHTS, MN. CONTRACTOR TO PROVIDE THREE WORKING DAYS NOTICE TO MR. SHEGSTAD. IT IS ASSUMED THAT HALF OF THE CURB MATERIAL WILL BE FROM MN/DOT SALVAGE AND ONE HALF WILL BE NEW QUARRIED STONE.
10. INCLUDES 70 SF OF CONCRETE WALK AND DETECTABLE WARNING SURFACE.
11. INCLUDES THE REMOVAL, SALVAGE, AND RESETTING THE EXISTING CURB AT A NEW ELEVATION.
12. 3828.2C
13. EROSION CONTROL (STORM WATER POLLUTION PREVENTION PLAN - 'SWPPP') IS REQUIRED FOR THIS PROJECT. INCLUDES SWPPP SUPERVISOR AND QUALITY ASSURANCE PROGRAM. SEE SHEET 6-7 FOR SPECIFIC REQUIREMENTS AND A LISTING OF ANTICIPATED MATERIALS TO ACHIEVE SWPPP REQUIREMENTS. DO NOT INCLUDE IN LUMP SUM THOSE ITEMS INDIVIDUALLY LISTED IN SEQ.
14. INCLUDES STONE CONCOURSE REPAIR, REBUILDING, REPOINTING, AND CLEANING ACCORDING TO DRAWINGS 21-36. SEE STONE WALL RESTORATION THIS SHEET.

GENERAL NOTES:

1. THIS PROJECT WILL RESTORE THE LAKE CITY CONCOURSE MATCHING ORIGINAL DESIGN AND MATERIALS AS SHOWN IN THE PLAN. ALL WORK AND MATERIALS MUST BE IN ACCORDANCE WITH THE SECRETARY OF INTERIOR'S STANDARDS AND WILL BE STRICTLY ENFORCED. ALL SUBMITTALS AS INDICATED IN SPECIAL PROVISIONS SECTION 013591 "HISTORIC TREATMENT PROCEDURES" MUST BE APPROVED PRIOR TO STARTING RESTORATION WORK AND IN ACCORDANCE WITH PROVISIONS OF Mn/DOT 1803.
2. THE INTENT IS TO RESTORE AREAS OF THE CONCOURSE, REPAIRING STONE, STONE PAVERS, AND STONE OVERLOOKS, AND TO REHABILITATE DRAINAGE STRUCTURES AND PARKING AREAS AND ACCESS TO THE SITE.
3. STONE REPLACEMENT SHALL BE OF THE SAME SIZE, COLOR, TEXTURE, FINISH, PATTERN, AND APPEARANCE AS EXISTING STONE. UTILIZE SALVAGED STONE TO THE GREATEST EXTENT POSSIBLE.
4. USE BEST MANAGEMENT PRACTICES TO PROTECT WATER QUALITY. FOR EXAMPLE, CONTROL THE SPREAD OF DUST, CONCRETE, AND MORTAR MATERIAL AND AVOID ALLOWING ANY CONCRETE, MORTAR MATERIAL, OR WASTE TO ENTER "WATERS OF THE STATE" (INCLUDES CATCH BASINS, DITCHES, ETC) IN ACCORDANCE WITH Mn/DOT 1717. ALL CONCRETE WASTE SHALL BE REMOVED FROM THE PROJECT AND DISPOSED OF IN ACCORDANCE WITH Mn/DOT 2104.
5. THE CONTRACTOR SHALL PERFORM ALL WORK IN ACCORDANCE WITH CURRENT OSHA SAFETY STANDARDS AND IN ACCORDANCE WITH Mn/DOT 1706.
6. Mn/DOT 1407 (FINAL CLEANUP) AND 1712 (PROTECTION AND RESTORATION OF PROPERTY) APPLY.
7. WHEREVER THE WORD "INCIDENTAL" IS USED, NO DIRECT PAYMENT WILL BE MADE.
8. CONTRACTOR IS RESPONSIBLE FOR CONFIRMATION OF MATERIAL QUANTITIES REQUIRED.
9. REMOVE AND DISPOSE OF ALL DEBRIS AND EXCESS OR UNUSABLE MATERIAL OFF RIGHT-OF-WAY (EXCEPT TOPSOIL) IN ACCORDANCE WITH Mn/DOT 2104.C.
10. ALL DIMENSIONS AND SLOPES ARE AS SHOWN ON TYPICAL SECTIONS EXCEPT AS SHOWN ELSEWHERE ON THE PLAN.
11. PROPERTY TO DRAIN TO DISCHARGE POINTS.

ARCHITECTURAL SPECIAL PROVISIONS SECTION	STONE WALL RESTORATION TABULATION - 2540.601		S.P. 7906-78 QUANTITIES ESTIMATED	S.P. 7906-78 QUANTITIES FINAL
040140	REMOVE DAMAGED STONE IN WALLS (1)	SFWL	358	
040140	REMOVE STONE PLAZAS (2)	SF	2510	
040140	DISMANTLE AND SALVAGE STONE WALLS (3)	SFWL	525	
040140	REMOVE CONCRETE FOUNDATION	LF	103	
040140	INSTALL NEW STONE IN WALLS	SFWL	358	
SEE SHEETS 34-36	INSTALL CONCRETE FROST FOOTING AT DISMANTLED WALL SECTIONS	LF	103	
040140	REBUILD STONE WALL ON NEW CONCRETE FROST FOOTING (3)	SFWL	525	
040140	REBUILD STONE WALL ON EXISTING FOOTING/WALL (4)	SFWL	55	
SEE SHEETS 34-36	BUILD STONE VENEER RETAINING WALL ON NEW CONCRETE FOUNDATION (5)	LF	487	
040140	INSTALL STONE PLAZA	SF	1460	
040140	REPOINT HISTORIC WALLS	SFWL	5035	
040140	CLEAN HISTORIC WALLS	SFWL	5569	
079200	INSTALL EXPANSION JOINTS (6)	LF	476	

RESTORE HISTORIC STRUCTURE TABULATION NOTES:

1. CRACKED OR DAMAGED STONES ARE INDICATED ON SHEETS 21-33 AND ADDITIONAL CRACKED OR DAMAGED STONES WILL BE MARKED IN THE FIELD BY THE ARCHITECT PRIOR TO COMMENCEMENT.
2. SALVAGE SOUND STONE FOR REUSE
3. DISMANTLE AND SALVAGE WALLS AS INDICATED ON SHEETS 21-33. INSTALL SALVAGED STONES FROM DISMANTLED SECTIONS ATOP A NEW CONCRETE FOUNDATION AFTER CULVERT REPAIR. REBUILDING SHOULD USE EXISTING STONES FROM DISMANTLED WALL SECTIONS.
4. REBUILDING IS ON EXISTING STONE IN WALL A2 AND EXISTING CONCRETE FOOTING AT THE NORTH END OF WALL A1.
5. WALL VARIES IN HEIGHT FROM 2'-0" TO 5'-0". VENEER STONE MUST MATCH STONE FROM HISTORIC WALLS IN A REGULAR ASHLAR PATTERN.
6. INCLUDES THE REMOVAL OF EXISTING MORTAR AND FELT MATERIAL IN JOINT, JOINT PREP, AND INSTALLATION OF JOINT BACKING MATERIAL AND SEALANT. JOINTS OVER 1/2 INCH WIDE WILL REQUIRE POINTING WITH MORTAR UP TO THE BACKING MATERIAL. SEE DETAIL 2/34.

UTILITIES TABULATION

DISTRICT	COMPANY NAME	PHONE
LPLPC001	CITY OF LAKE CITY	651.345.5383
STARTV04	MEDIACOM	800.221.2603
UNTLMN01	EMBARQ FORMER SPRINT	800.575.5587
XCEL01	XCEL ENERGY	608.223.2014

UTILITY NOTES:

1. IT SHALL BE THE CONTRACTOR'S RESPONSIBILITY TO UTILIZE THE "GOPHER ONE CALL EXCAVATION NOTICE" (1-800-252-1166) REQUIRED BY MINNESOTA STATUTE 216D.
2. UTILITIES WILL BE AFFECTED BY THIS PROJECT.
3. THE SUBSURFACE UTILITY INFORMATION IN THIS PLAN IS UTILITY LEVEL QUALITY D. THE UTILITY LEVEL WAS DETERMINED ACCORDING TO THE GUIDELINES OF CI/ASCE 38-02 ENTITLED "STANDARD GUIDELINES FOR THE COLLECTION AND DEPICTION OF EXISTING SUBSURFACE".

LAKE CITY CONCOURSE STORM WATER POLLUTION PREVENTION PLAN (SWPPP)

TH61 LAKE CITY, WABASHA COUNTY, BETWEEN WEST ELM STREET AND WEST MINNESOTA STREET.
FIPS CODE 2715734172
THIS PROJECT WILL REHABILITATE THE CONCOURSE WALLS AND RECREATION ENTRANCE MATCHING ORIGINAL DESIGN AND MATERIALS DESIGNATED HISTORIC. THE INTENT IS TO RESTORE THE STONE MASONRY OF THE CONCOURSE WALLS.

THE EXPECTED AREA DISTURBANCE WILL BE LESS THAN 1 ACRE, AND INCLUDES BOTH SIDES OF CONCOURSE WALLS, CURB & GUTTER, SIDEWALK, STAGING AREAS, AND ACCESS OFF TH61. THERE WILL BE NO CHANGE IN IMPERVIOUS SURFACE.

THE FOLLOWING SPECIAL OR IMPAIRED WATERS ARE WITHIN 1 MILE OF THIS PROJECT
LAKE PEPIN IS LISTED IMPAIRED FOR TOTAL PHOSPHORUS
MISSISSIPPI RIVER IS LISTED IMPAIRED FOR PCB, PFOS, AND TURBIDITY
MILLER CREEK IS A DNR DESIGNATED TROUT STREAM
THIS PROJECT WILL ADDRESS PHOSPHORUS AND TURBIDITY POLLUTANTS AND NOT CREATE A CHANGE IN TEMPERATURE OF STORM WATER DISCHARGE

THE ULTIMATE RECEIVING WATER IS THE MISSISSIPPI RIVER/LAKE PEPIN BY DIRECT DISCHARGE, GROUND WATER INFILTRATION, DITCHES, CURB AND GUTTER INLETS, AND CULVERTS

SOILS CONSIST OF SANDY AND SILT LOAMS.

THE POTENTIAL POLLUTANTS GENERATED FROM THIS WORK INCLUDE THE FOLLOWING:
STONE DUSTS, MASONRY AND MORTAR DUSTS, PORTLAND CEMENT, HYDRATED LIME, MORTAR PIGMENTS, FUELS, SOLVENTS, CLEANING/DETERGENT AGENTS, SEDIMENTS, HOT WATER AND FERTILIZER

PROJECT ENGINEER & SWPPP

MN/DOT PROJECT MANAGER	CAROL ZOFF	651-366-4705
CONTRACTOR EC SUPERVISOR	TBD	
SWPPP DESIGN	DWAYNE STENLUND CPESC #2052	612-810-9409
MN/DOT EROSION CONTROL	DWAYNE STENLUND	612-810-9409
CONSTRUCTION SUPERVISOR	JULEE TAYLOR	651-366-4779
STATE DUTY OFFICER		800-422-0798
DNR TRANSPORTATION HYDROLOGIST	PETER LEETE	651-366-3634
MPCA	ROBERTA GETMAN	

ESTIMATED QUANTITIES (TEMPORARY AND PERMANENT EROSION AND SEDIMENT CONTROL) LUMP SUM

ITEM NUMBER	ITEM	PROPOSED USE	QUANTITY
3897 FILTER LOG	TYPE COMPOST	GUTTER FILLERS	100 LF (IN 4 FT UNITS)
3897 FILTER LOG	TYPE ROCK LOG	GUTTER INLET CHECK FOR WASH AND CUT SLURRY CONTAINMENT, CURB HEAD PERIMETER	100 LF
3897 FILTER LOG	TYPE COMPOST	CULVERT END FILTER RING, PERIMETER CONTROL	1500 LF
2573.3A5/1717.2A3	DRIVABLE PADS	EXIT CONTROL, TREE ROOT PROTECTION, SOFT SOIL CROSSINGS	400 SF
	SPILL KITS	CONTINGENCY PLAN FOR SPILL RECOVERY	3 UNITS
3891 STORM DRAIN INLET PROTECTION	TYPE F FILTER BAG INSERT INLET SACK	SLURRY MANAGEMENT FROM WASHING, GRINDING, AND MORTAR APPLICATION	7 EA
2575.3M	TURF ESTABLISHMENT SALT TOLERANT SOD	RESTORATION OF TURF AREAS	.25 AC
2575.3L5	MOWING/WEED CONTROL		2 HR
2573.3A1/1717.2C	EROSION CONTROL SUPERVISOR	ENVIRONMENTAL QUALITY CONTROL PROGRAM	1 EA
2573.3A5	STREET SWEEPER, PICK UP TYPE	KEEPING ROAD SURFACES FREE OF SEDIMENTS AND DUSTS	8 HR
3881 FERTILIZER	TYPE 3 SLOW RELEASE	QUICK COVER RATIO 22-5-10	10 LB
3876 SEED	SEED MIXTURE 260	DISTURBED SOIL RESTORATION	25 LB
3884 HYDRAULIC SOIL STABILIZER	TYPE 6 HYDROMULCH BLEND	TEMPORARY SOIL STABILIZATION, DUST CONTROL	1000 LB
3882 MULCH MATERIAL	TYPE 5 SLASH MULCH	SOFT SOIL CROSSINGS, LIQUID MORTAR ABSORBENT, SEDIMENT CONTROL	1 T
3882 MULCH MATERIAL	TYPE 3 CERTIFIED WEED FREE STRAW	ACCIDENTAL DAMAGED TURF AREAS	.25 T

BMP INSTALLATION, MAINTENANCE AND OPERATIONS

1. THE ENTIRE PROJECT SHALL USE THE SITE PLAN PROCESS AS PER 1717. ADDITIONAL SITE PLANS SHALL BE SUBMITTED WHEN REQUESTED BY THE PROJECT ENGINEER OR AS INDICATED IN THE PLAN. IT IS RECOMMENDED THAT 1717 SITE PLANS BE DEVELOPED BY THE CONTRACTOR PRIOR TO ANY WORK ADJACENT TO THE MISSISSIPPI RIVER/LAKE PEPIN, AND ALL STONE CUTTING, MORTAR GRINDING, AND STONE CLEANING OPERATIONS. IT IS EXPECTED THAT THE CONTRACTOR USE BEST MANAGEMENT PRACTICES TO PREVENT THE DISCHARGE OF FUGITIVE DUSTS BY USE OF WATER MISTS OR PLASTIC SHROUDS AND VACUUMS.

2. TURF AND CONVEYANCE OUTFALLS MUST BE PROTECTED FROM CEMENTITIOUS MATERIALS, SEDIMENTS, AND CHEMICAL CLEANING AGENTS BY AVOIDANCE, USE OF PLASTIC SHEETING, COMPOST FILTER LOGS OR OTHER PROJECT ENGINEER APPROVED METHODS. THE CONTRACTOR SHALL PREVENT DISCHARGE TO SURFACE AND GROUND WATERS BY VACUUM OR SWEEP COLLECTION OF ALL CEMENTITIOUS MATERIALS, CLEANING AGENTS FROM PLASTIC GROUND COVERS, MATS, OR OTHER PROJECT ENGINEER APPROVED METHOD.

3. ANY RUTS OR DAMAGED TURF THAT COULD CREATE SEDIMENT DISCHARGE TO THE MISSISSIPPI RIVER/LAKE PEPIN AND CONVEYANCE SYSTEMS MUST BE REPAIRED WITHIN 24 HOURS WITH SHAPING, SEEDING AND CERTIFIED WEED FREE STRAW MULCH MATERIALS. EFFORT MUST BE MADE TO PREVENT REOCCURRENCE OF SOIL DISTURBANCE BY PROTECTIVE SOIL COVERS.

4. TEMPORARY SHORT TERM WORK GENERATING CONCRETE, MORTAR, OR STONE DEBRIS MAY USE GEOTEXTILE INLET FILTER STOPS, BUT MUST BE REPLACED WITH CURB AND GUTTER INLET SACKS WITH EMERGENCY OVERFLOW WILL BE USED, AS NEEDED, TO PROTECT INLETS OVER THE LIFE OF THE CONTRACT WHEN EXPOSED SOILS WITH THE POTENTIAL TO DISCHARGE ARE UPGRADIENT TO THE INLET, OR DURING ACCESS AND TRACK-OUT OPERATIONS. PICKUP (ENCLOSED SKIDSTEER BROOM) SWEEPING OF ALL PAVED SURFACES WILL BE REQUIRED, AS NECESSARY TO KEEP SEDIMENTS, MUD, DIRT, ROCK, OR OTHER MATERIALS FROM LEAVING THE PAVED SURFACE DUE TO RAIN OR VEHICLE TRACKING.

5. CULVERT ENDS WILL BE PROTECTED FROM SEDIMENT DISCHARGE USING COMPOST FILTER LOGS, WOOD-FIBER LOGS, OR WOOD CHIP LOGS, AS NEEDED.

6. SLOPE GRADES MUST BE PROTECTED. ANY SOIL DISTURBED AREAS SHALL BE KEPT IN A PERPETUALLY STABILIZED CONDITION.

7. SOFT SOIL CROSSING WILL REQUIRE DRIVABLE MATS CAPABLE OF MINIMIZING SOIL DISTURBANCE FOR THE CONTRACTORS' EQUIPMENT. THIS MAY BE ACCOMPLISHED BY USE OF PLYWOOD, MUD MATS, OR STRUCTURAL PLASTIC BASE UNITS.

8. ALL MORTAR AND CHEMICAL MIXING SAWING, AND CUTTING OPERATIONS SHALL HAVE SECONDARY CONTAINMENT TO PREVENT CEMENTITIOUS LIQUIDS, SOLIDS AND DUSTS FROM INFILTRATING INTO THE GROUND OR TRANSPORT BY ANY MEANS TO THE GUTTER, SIDEWALK OR ROAD SURFACE.

9. ALL REFUELING OF EQUIPMENT SHALL BE DONE IN A MANNER THAT DOES NOT LEAVE ANY RESIDUE IN THE SOIL. NO REFUELING MAY TAKE PLACE WITHIN 200 LF OF ANY STORM INLET. IF A SPILL WERE TO OCCUR, IT MUST BE REMOVED IMMEDIATELY AND THE CONTAMINATED SOIL PROPERLY DISPOSED ACCORDING TO MPCA REQUIREMENTS. AN OIL AND UNIVERSAL SPILL KIT SHALL BE AVAILABLE ON SITE WHENEVER MOTORIZED EQUIPMENT IS PRESENT.

10. ALL PERIMETER CONTROL BMPS SHALL BE KEPT IN A FUNCTIONAL CONDITION, REGARDLESS OF NUMBER OF MOVEMENTS TO ACCOMMODATE THE CONTRACTORS OPERATIONS. PERIMETER CONTROL SHALL BE IN THE FORM OF 3987 FILTER LOGS, TYPE COMPOST LOG.

11. ALL CHEMICAL SPILLS SHALL BE IMMEDIATELY PICKED UP, INCLUDING FERTILIZERS AND PORTABLE URINALS. ALL SPILLED MATERIALS SHALL BE PROPERLY DISPOSED OF OR, IN THE CASE OF FERTILIZER, SPREAD ACCORDING TO MANUFACTURERS RECOMMENDATIONS FOR NPK, OR AS INDICATED IN THE TURF RESTORATION PLAN. THERE SHALL BE NO EQUIPMENT WASHING ON SITE UNLESS IN A PREAPPROVED BY THE PROJECT ENGINEER, AND IN A DESIGNATED SITE WITH TOTAL POLLUTION MANAGEMENT PROGRAM THAT PREVENTS AIR, LAND AND WATER POLLUTION.

12. ALL TRASH AND CONSTRUCTION DEBRIS SHALL BE PICKED UP AT THE END OF EACH DAY AND TEMPORARY PLACED IN DUMPSTERS OR OTHER SUITABLE CONTAINERS, AND REMOVED AS NECESSARY TO REMAIN FUNCTIONAL.

13. ALL CONCRETE OR STONE SAW CUTTING SHALL BE PREVENTED FROM ENTERING STORM WATER CONVEYANCE SYSTEMS BY USE OF 3897 FILTER LOG, TYPE COMPOST LOG, AND REPLACE AS OFTEN AS NECESSARY TO REMAIN FUNCTIONAL TO FILTER REMOVE FINE CEMENTITIOUS DISCHARGE.

14. FINAL TURF RESTORATION SHALL BE AS PER PRE-EXISTING CONDITION, AS CERTIFIED SALT TOLERANT SOD OR EQUIVALENT.

15. THE CONTRACTOR SHALL DEVELOP A QUALITY ASSURANCE PROGRAM AS PER 1717. THE CONTRACTOR SHALL PERFORM DAILY INSPECTIONS AND CORRECT ANY EROSION AND SEDIMENT CONTROL DEFICIENCIES, INCLUDING THOSE DISCOVERED AFTER EVERY 0.5 INCH RAIN EVENT. THE INSPECTION REPORT SHALL BE IN WRITING ALONG WITH PHOTOGRAPHS, AND SUBMITTED TO THE PROJECT ENGINEER EVERY WEEK DURING SOIL DISTURBANCE OPERATIONS. ONCE THE SITE HAS BEEN STABILIZED, THE INSPECTIONS SHALL BE DONE EVERY 30 DAYS, OR UNTIL 70 PERCENT PERENNIAL VEGETATIVE
COVER HAS BEEN ESTABLISHED OVER THE WHOLE SITE. THE CONTRACTOR IS REMINDED TO TERMINATE THE PERMIT COVERAGE WITHIN 30 DAYS OF MEETING THE NPDES REQUIREMENTS, AS APPLICABLE.

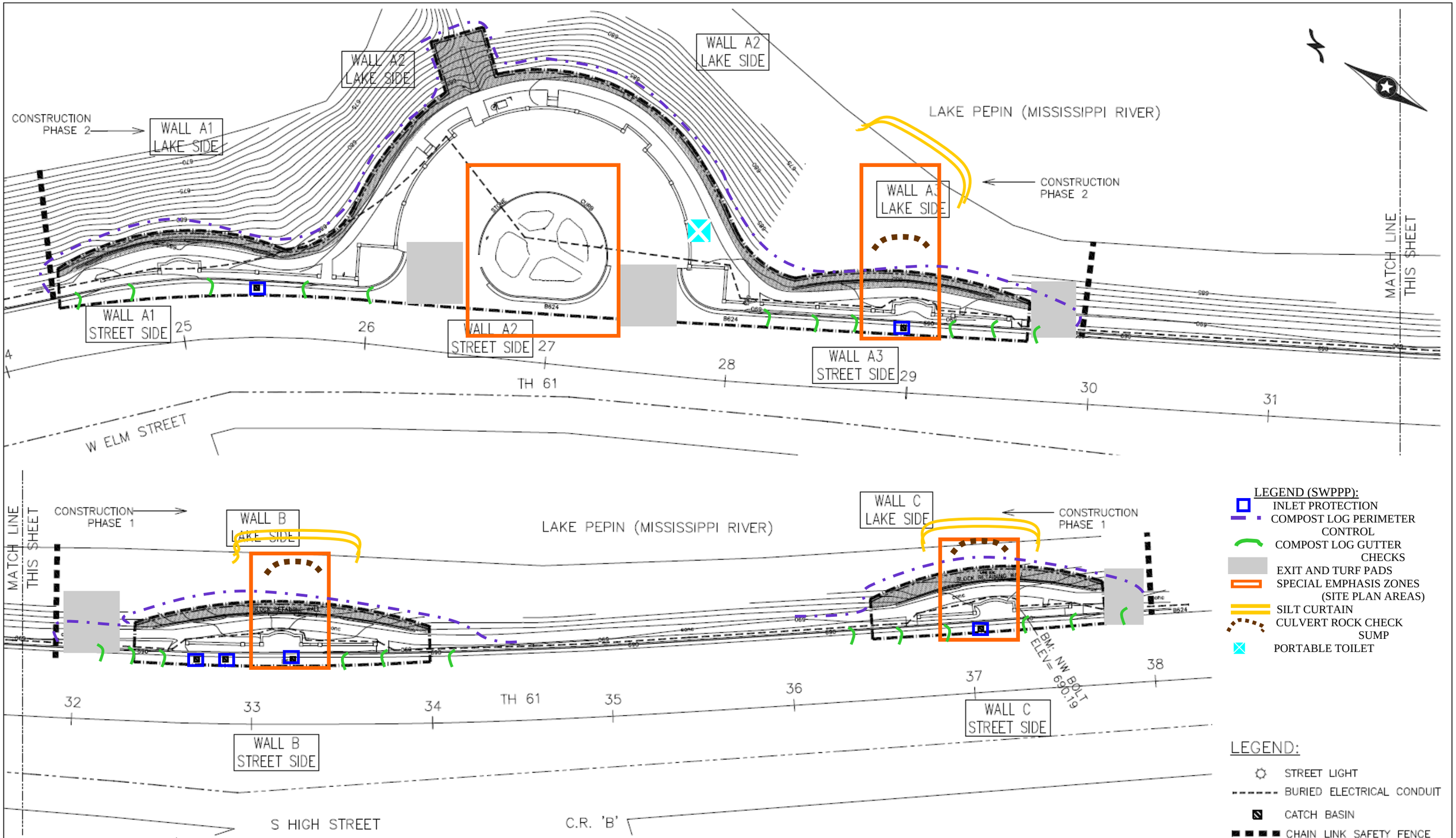

DATE MODIFIED: MARCH 22, 2010	DRAWN BY: ALM CHECKED BY: TAG	I HEREBY CERTIFY THAT THIS PLAN WAS PREPARED BY ME OR UNDER MY DIRECT SUPERVISION AND THAT I AM A DULY LICENSED ARCHITECT UNDER THE LAWS OF THE STATE OF MINNESOTA.	SIGNATURE: PRINTED NAME: TODD GROVER DATE: MARCH 22, 2010 LIC. NO. 43014	MACDONALD & MACK ARCHITECTS	STATE OF MINNESOTA DEPARTMENT OF TRANSPORTATION TRANSPORTATION BUILDING ST. PAUL, MINNESOTA 55155–1899
FILE SERVER LOCATION: M:\Projects\Roadside Properties\South\Lake City Concourse\Drawings\Lake City Concourse.dwg					

LAKE CITY CONCOURSE – CITY OF LAKE CITY
STORM WATER POLLUTION PREVENTION PLAN LAYOUT PLAN

STATE PROJECT 7906–78 T.H. 61 | SHEET NO. 7 OF 38 SHEETS

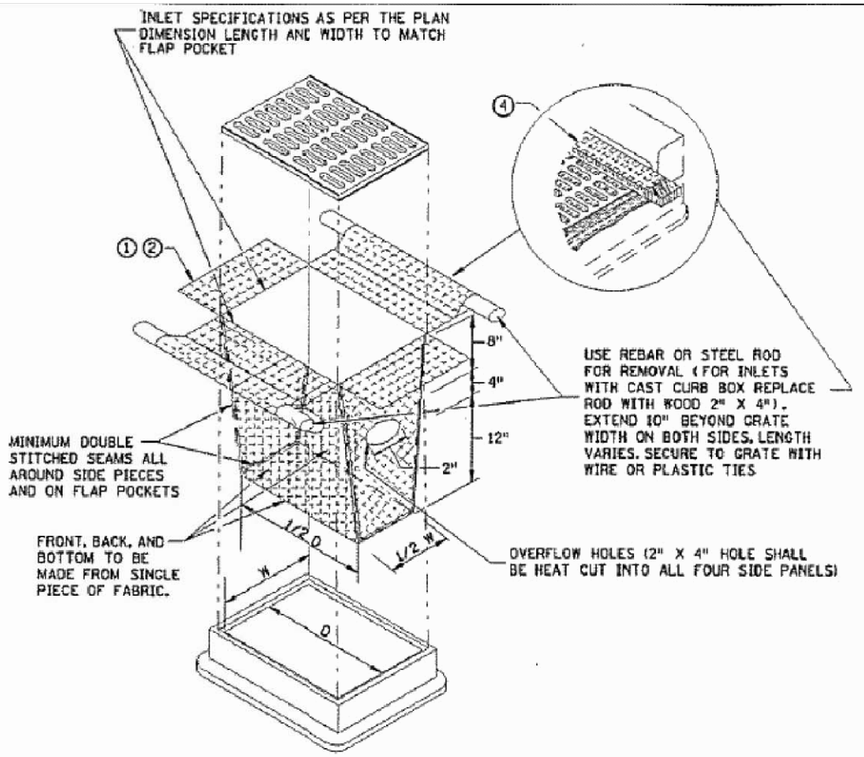

FILTER BAG INSERT ③

(CAN BE INSTALLED IN ANY INLET TYPE WITH OR WITHOUT A CURB BOX)

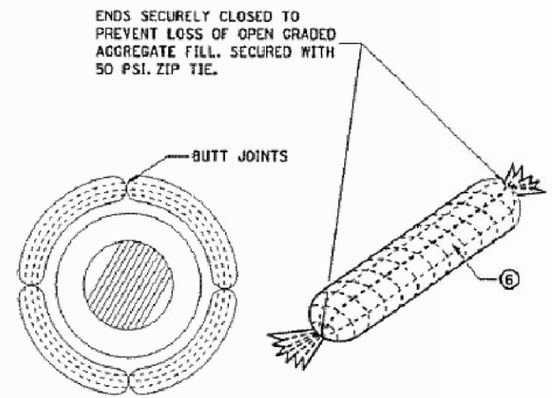

ROCK LOG/COMPOST LOG

COMPOST LOGS MAY ALSO BE USED FOR PERIMETER CONTROL, GUTTER CHECKS, CONCRETE SLURRY FILTRATION AND DE-WATERING OPERATIONS

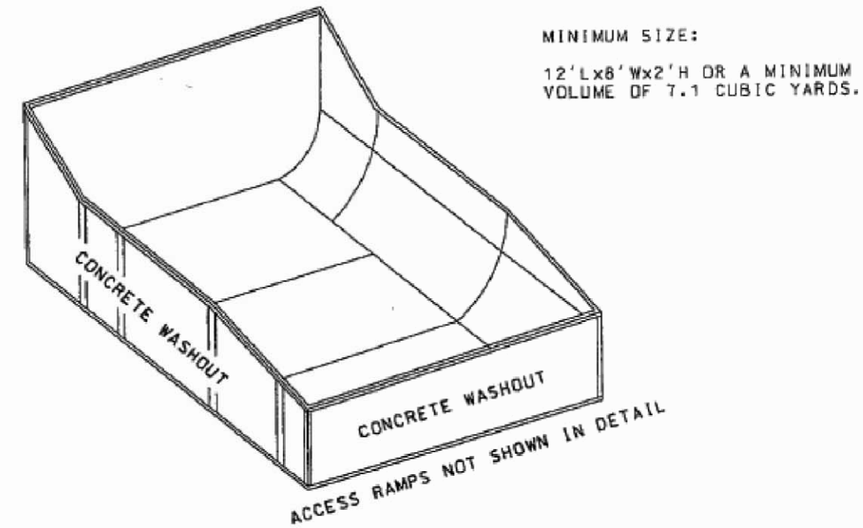

ALTERNATIVE AND ADDITIONAL DETAILS AND INFORMATION CAN BE OBTAINED FROM MN/DOT BEST MANAGEMENT PRACTICE GUIDANCE DOCUMENTS FOR CONCRETE WASHOUT AND WASHOFF OF VEHICLE, EQUIPMENT, PAVEMENT AND WALLS, 2009 EDITIONS.

INLET PROTECTION DETAIL

CONCRETE WASHOUT DETAIL

EXIT STABILIZATION DETAIL

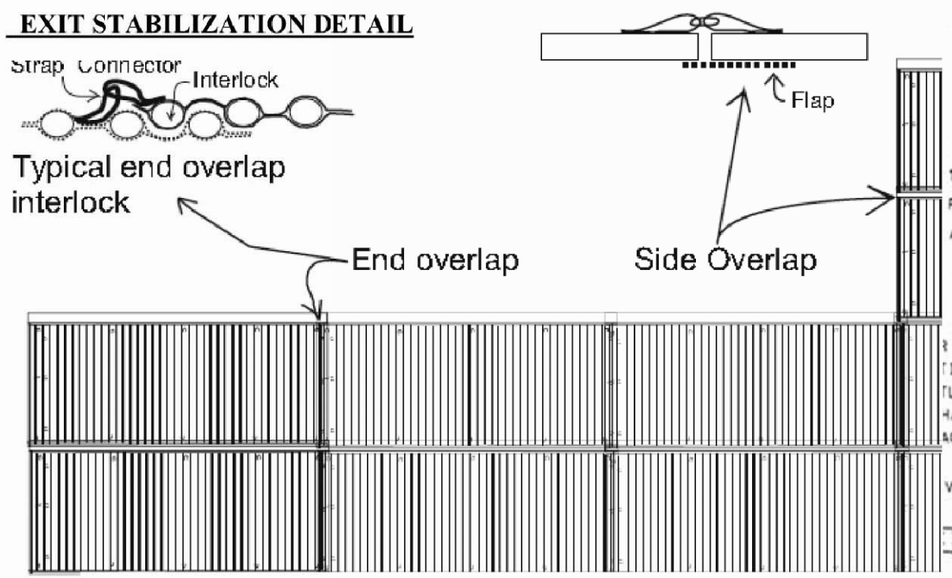

DEWATERING DETAIL

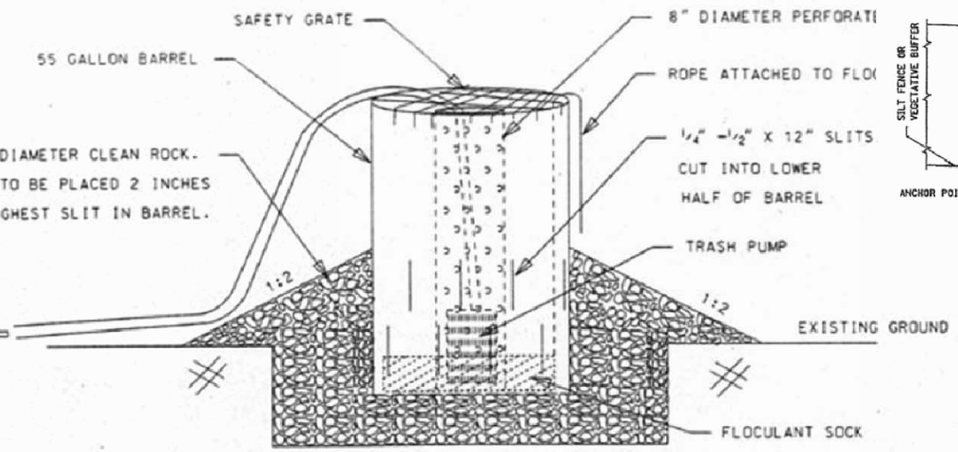

DEWATERING DEVICE SHOULD BE PLACED AT THE LOW POINT OF THE AREA TO DRAIN

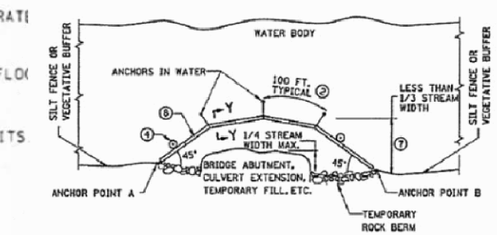

PLAN VIEW (TYPE: WORK AREA)

DATE MODIFIED: APRIL 12, 2010	DRAWN BY: ALM CHECKED BY: TAG	I HEREBY CERTIFY THAT THIS PLAN WAS PREPARED BY ME OR UNDER MY DIRECT SUPERVISION AND THAT I AM A DULY LICENSED ARCHITECT UNDER THE LAWS OF THE STATE OF MINNESOTA.	SIGNATURE: PRINTED NAME: TODD GROVER DATE: APRIL 12, 2010 LIC. NO. 43014	MACDONALD & MACK ARCHITECTS	STATE OF MINNESOTA DEPARTMENT OF TRANSPORTATION TRANSPORTATION BUILDING ST. PAUL, MINNESOTA 55155-1899
FILE SERVER LOCATION: M:\Projects\Roadside Properties\South\Lake City Concourse\Drawings\Lake City Concourse.dwg					

LAKE CITY CONCOURSE – CITY OF LAKE CITY
STORM WATER POLLUTION PREVENTION PLAN DETAILS

STATE PROJECT 7906-78 T.H. 61 | SHEET NO. 8 OF 38 SHEETS

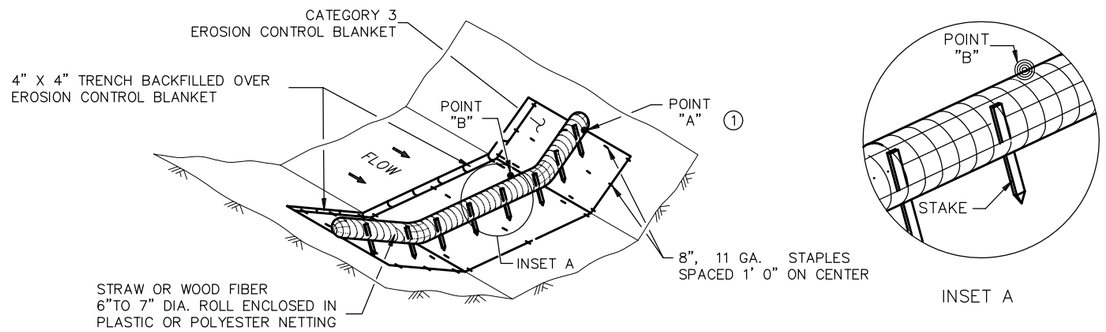

TYPE 3: BIOROLL BLANKET SYSTEM DITCH CHECK

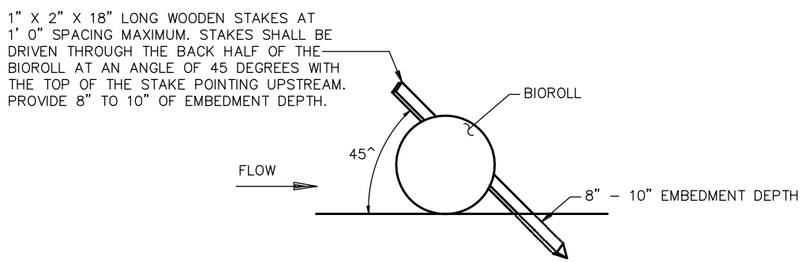

BIOROLL STAKING DETAIL

GENERAL DESIGN GUIDELINES						
DITCH CHECK TYPE	SILT FENCE	BIOROLL	BIOROLL BLANKET	TRIANGULAR DIKE	ROCK WEEPER	ROCK CHECK
STORM FREQUENCY:	2 YR. – 24 HR.	2 YR. – 24 HR.	2 YR. – 24 HR.	2 YR. – 24 HR.	5 YR. – 24 HR.	5 YR. – 24 HR.
MAX. FLOW VELOCITY:	< 1 FT./SECOND	1.5 FT./SECOND	4.5 FT./SECOND	1.5 FT./SECOND	12 FT./SECOND	12 FT./SECOND
MAX. DITCH GRADE:	0% – 0.5%	1.5% – 3%	1.5% – 3%	1.5% – 2.0%	3% – 5%	3% – 5%
MAX. DRAINAGE AREA:	1 ACRE	2 ACRE	2 ACRE	4 ACRE	4+ ACRE	4+ ACRE

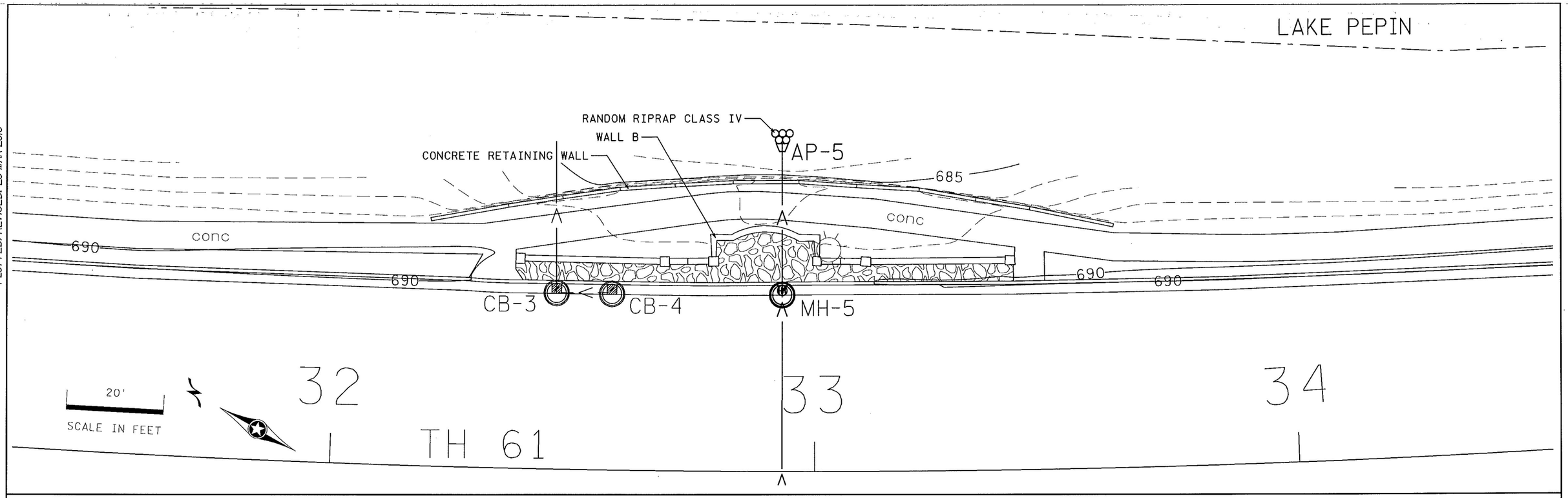

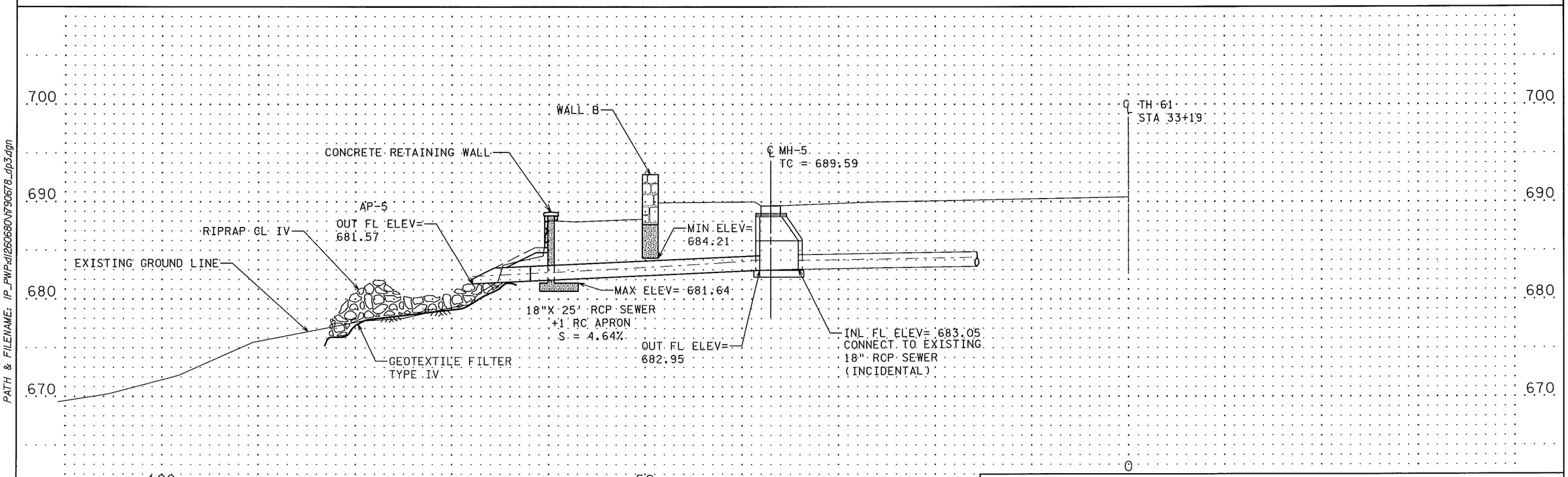

CERTIFIED BY Ruth Betcher LIC. NO. 18645 DATE 23-MAR-2010
RUTH BETCHER - LICENSED PROFESSIONAL ENGINEER

LAKE CITY CONCOURSE - CITY OF LAKE CITY
CATCH BASIN STATION POINT 33+19

STATE PROJ. NO. 7906-78 (TH 61) SHEET NO. 13 OF 38 SHEETS

PLOTTED/REVISED: 23-MAR-2010

DISTRICT #: 6
IPLOT NAME: h790678_dp3
PATH & FILENAME: IP_PWP:d1260680\h790678_dp3.dgn

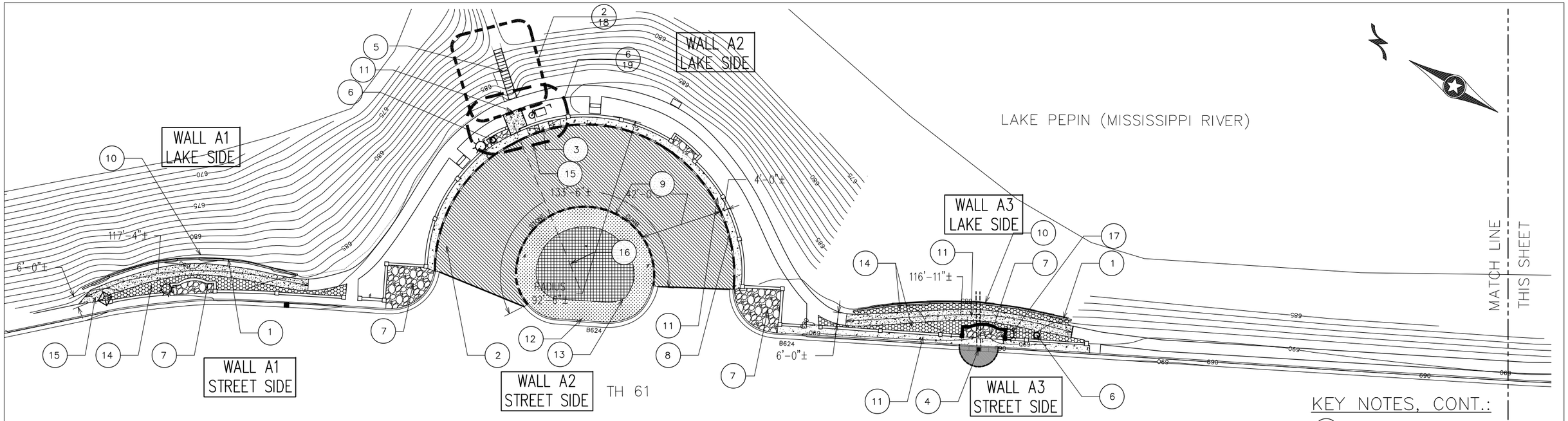

1 | LAYOUT AND PLANTING PLAN WALLS A1, A2, AND A3

0 25 50 SCALE IN FEET

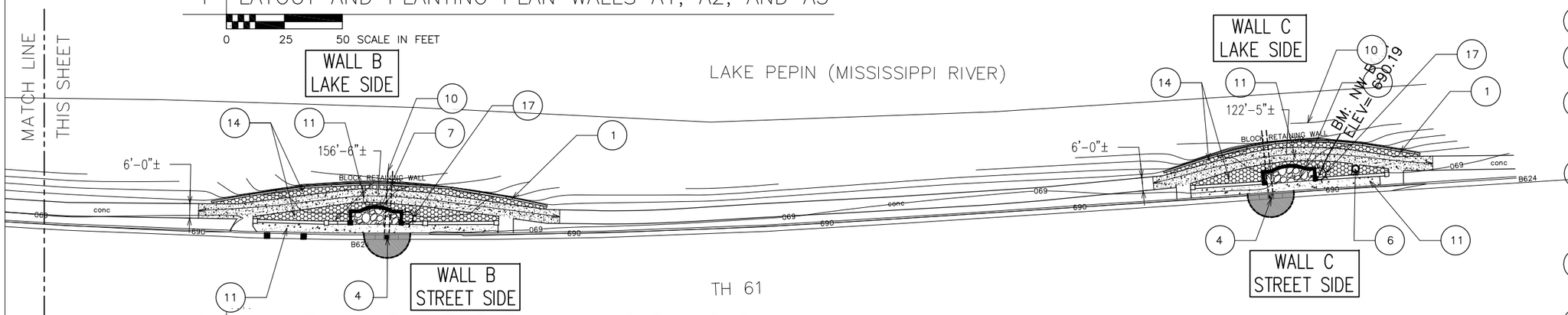

2 | LAYOUT AND PLANTING PLAN WALLS B AND C WALL

0 25 50 SCALE IN FEET

GENERAL NOTES:

1. CONTRACTOR TO FIELD VERIFY ALL DIMENSIONS AND CONDITIONS. REPORT UNFORESEEN CONDITIONS AND DISCREPANCIES TO ARCHITECT.

SHEET NOTES:

1. REFER TO SHEET 10 FOR ALL PLANTING DETAILS AND TO SP–22
2. REFER TO SHEETS 19–20 FOR SITE DETAILS
3. EXISTING IRRIGATION TO BE REMOVED BY CITY PRIOR TO PROJECT.
4. PROTECT EXISTING CONCRETE WALKWAYS AND LIMESTONE RETAINING WALLS
5. SP–22 THROUGH SP–25 APPLY
6. REFER TO SHEETS 21–35 FOR WALL CONSTRUCTION DETAILS.

LEGEND:

- BITUMINOUS PAVEMENT
- LIMESTONE PAVERS
- CONCRETE WALKWAY
- SOD
- RAIN GARDEN AMENDED SOILS WITH EROSION CONTROL BLANKET
- REPLACE/AUGMENT GRAVEL MULCH
- SALVAGED LIMESTONE CURB
- LIMESTONE CURB
- REMOVE AND SALVAGE LIMESTONE RETAINING WALL
- LIGHT POST
- CATCH BASIN
- NEW CULVERT

KEY NOTES:

1. NEW CONCRETE RETAINING WALL WITH STONE VENEER – SEE SHEETS 18, 28–31.
2. BITUMINOUS PAVEMENT WITH AGGREGATE BASE (CV) CLASS 5. SEE DETAIL 5/17.
3. PEDESTRIAN RAMP – FURNISH AND INSTALL LANDING AND RAMP WITH TRUNCATED DOMES. SURFACE FINISH: LIGHT BROOM. SEE SHEET 19.
4. DRAINAGE STRUCTURE – FURNISH AND INSTALL DRAINAGE STRUCTURE. SEE SHEETS 11–14. PATCH BITUMINOUS AND REPLACE B624 CURB AND GUTTER AS NEEDED.
5. STAIR AND RAILING – FURNISH AND INSTALL CONCRETE STAIR AND METAL RAILING. SEE SHEET 18.

KEY NOTES, CONT.:

6. TRASH RECEPTACLE – NIC. TO BE REINSTALLED BY CITY AFTER PROJECT.
7. LIMESTONE WALK – INSTALL NEW LIMESTONE PAVERS. SEE DETAIL 4/18.
8. LIMESTONE CURB – FURNISH AND INSTALL NEW LIMESTONE CURB. SEE DETAIL 4/19 AND SP 321400.
9. REINSTALL LIMESTONE CURB – REINSTALL EXISTING STONE CURB AND REPLACE MISSING SECTIONS. PROVIDE 2"± SPACE BETWEEN STONES. SEE DETAIL 4/19 AND SP 321400.
10. SOD – AT AREAS ADJACENT TO RETAINING WALL/DRAINAGE STRUCTURE EXCAVATION REMOVE ANY REMAINING TURF. BACKFILL WITH TOPSOIL AND LIGHTLY COMPACT SMOOTH GRADES AND TRANSITIONS. INSURE A 6" DEPTH OF TOPSOIL.
11. CONCRETE WALK – FURNISH AND INSTALL CONCRETE WALK. SPECIAL SURFACE FINISH. PROVIDE HAND TOOLED JOINTS. SEE DETAIL 5/19.
12. SOD STRIP AND TURF REINFORCEMENT MAT. SEE SHEET 10.
13. INFILTRATION BASIN AMENDED SOILS AND EROSION CONTROL BLANKET. SEE DETAIL 2/20.
14. LANDSCAPE ROCK – 4" DEPTH – MATCH EXISTING.
15. INSTALL CONCRETE SIDEWALK: AFTER WALL WORK HAS BEEN COMPETED, INSTALL 11'X12' CONCRETE WALK THAT WAS REMOVED.
16. DRAIN TILE TRENCH AND DIRECTIONAL BORE: TRENCH VC SCHEDULE 40 DRAIN TILE IN TRENCH IN RAINGARDEN. DIRECTIONAL BORE FROM RAINGARDEN TO RIP RAP. SEE SHEET 20.
17. LIGHT POST: LIGHT POST TO BE RECONNECTED BY CITY AFTER COMPLETION OF WORK. PROTECT EXISTING CONDUIT THAT REMAINS THROUGHOUT PROJECT.

DATE MODIFIED: APRIL 12, 2010	DRAWN BY: ALM, DLB CHECKED BY: TAG, DLB	I HEREBY CERTIFY THAT THIS PLAN WAS PREPARED BY ME OR UNDER MY DIRECT SUPERVISION AND THAT I AM A DULY LICENSED ARCHITECT UNDER THE LAWS OF THE STATE OF MINNESOTA.	SIGNATURE: PRINTED NAME: DEBORAH BARTELS DATE: APRIL 12, 2010 LIC. NO. 18722	CLOSE LANDSCAPE ARCHITECTURE +	STATE OF MINNESOTA DEPARTMENT OF TRANSPORTATION TRANSPORTATION BUILDING ST. PAUL, MINNESOTA 55155–1899
FILE SERVER LOCATION: M:\Projects\Roadside Properties\South\Lake City Concourse\Drawings\Lake City Concourse Planting and Layout.dwg					

LAKE CITY CONCOURSE – CITY OF LAKE CITY
SITE LAYOUT AND PLANTING PLAN

STATE PROJECT 7906–78 T.H. 61 | SHEET NO. 16 OF 38 SHEETS

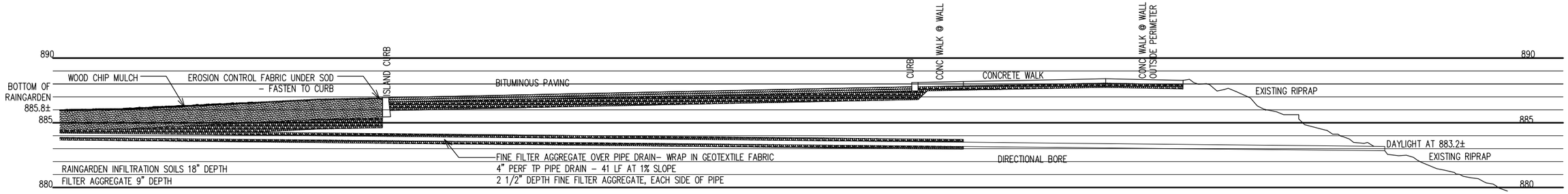

1 RAIN GARDEN–DRAIN TILE SECTION

0 2 4 8 SCALE IN FEET

PLANTING MEDIUM SHALL CONSIST OF 60% CLEAN SAND, 10% MINERAL TOPSOIL, AND 30% COMPOST, WELL BLENDED. SEE SPECIAL PROVISIONS. MEDIUM MUST MEET INFILTRATION RATES OF 0.5 INCHES PER HOUR OR GREATER

TURF REINFORCEMENT MAT TO EXTEND ENTIRE LENGTH OF SOD

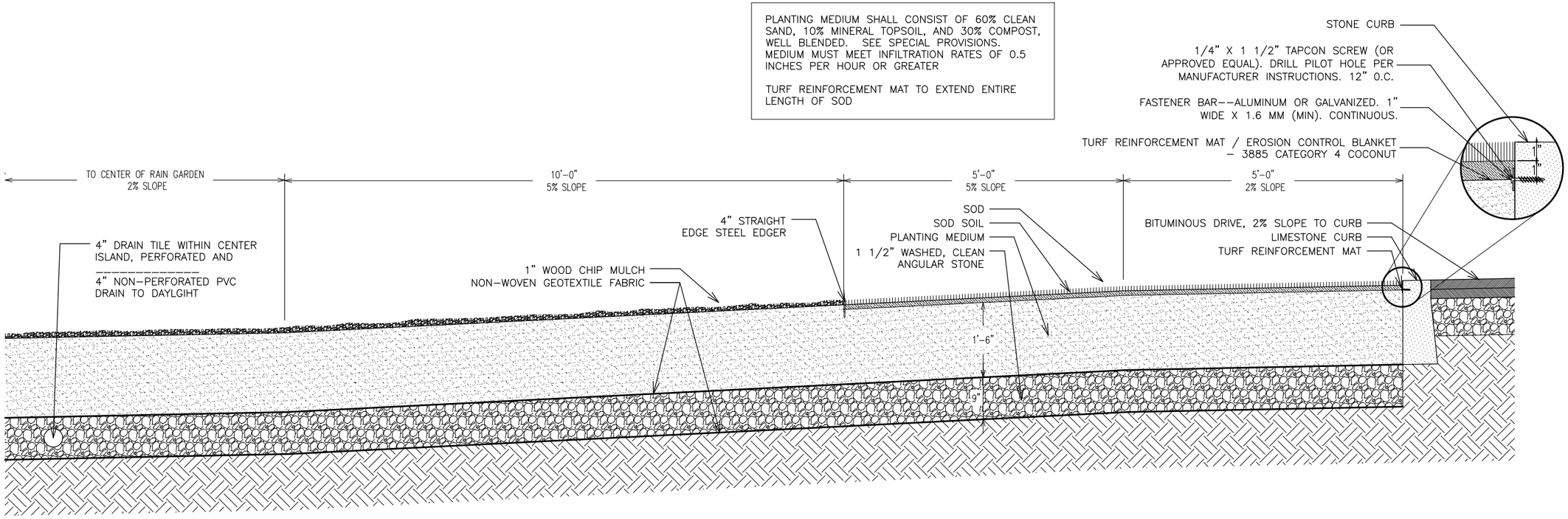

2 INFILTRATION BASIN SECTION

0 1 2 SCALE IN FEET

DATE MODIFIED: APRIL 12, 2010	DRAWN BY: ALM CHECKED BY: TAG	I HEREBY CERTIFY THAT THIS PLAN WAS PREPARED BY ME OR UNDER MY DIRECT SUPERVISION AND THAT I AM A DULY LICENSED ARCHITECT UNDER THE LAWS OF THE STATE OF MINNESOTA.	SIGNATURE: PRINTED NAME: TODD GROVER DATE: APRIL 12, 2010 LIC. NO. 43014	MacDonald & Mack ARCHITECTS	STATE OF MINNESOTA DEPARTMENT OF TRANSPORTATION TRANSPORTATION BUILDING ST. PAUL, MINNESOTA 55155–1899
FILE SERVER LOCATION: M:\Projects\Roadside Properties\South\Lake City Concourse\Drawings\Lake City_Key Plan.dwg					

LAKE CITY CONCOURSE – CITY OF LAKE CITY
RAINGARDEN DETAILS AND DRAIN TILE SECTION

STATE PROJECT 7906–78 T.H.61 | SHEET NO. 20 OF 38 SHEETS