NOTES

1. CONTRACTOR TO FIELD VERIFY ALL EXISTING CONDITIONS PRIOR TO CONSTRUCTION.
2. EXISTING TOPOGRAPHY BASED ON SURVEY BY Mn/DOT SPRING 2009.
3. SEE SHEET C112 DETAIL 10.

LEGEND

- 983 — EXISTING CONTOUR
- EXISTING BITUMINOUS PAVING
- EXISTING TREES
- LIMITS OF TREE REMOVAL
- TREE PROTECTION FENCING

ARCHITECTURAL ALLIANCE

400 Clifton Avenue South

Minneapolis, Minnesota 55403-3299

Telephone (612) 871-5703

Fax (612) 871-7212

Structural Engineer

Meyer Borgman
12 South Sixth Street / Suite 810
Minneapolis, Minnesota 55402
(612) 338-0713

Mechanical, Electrical Engineer

Dunham Associates
50 South Sixth Street / Suite 1100
Minneapolis, Minnesota 55402
(612) 465-7550

Civil Engineers

EVS Inc.
10250 Valley View Road / Suite 12
Eden Prairie, Minnesota 55344
(952) 646-0236

Landscape Architect

Damon Farber Associates
923 Nicollet Mall
Minneapolis, Minnesota 55402
(612) 332-7522

I hereby certify that this plan or drawing was prepared by me or under my direct supervision and that I am a duly licensed Engineer under the laws of the State of Minnesota.

For Architectural Alliance

By

Name Daniel E Bowar

Date 09/25/09 Reg. No. 45018

Issued for	Date
BID DOCUMENTS	09/25/09

Copyright 2009 Architectural Alliance

Comm. No. 2009019

Drawn PF/DB

Checked DEZ

Date 09/25/09

Project

MnDOT / Carver County
Chaska Truck Station

4725 Chaska Boulevard
Chaska, Mn 55318

Existing Conditions/
Demolition Plan

0 50 100
SCALE IN FEET

c101

SEQUENCE OF CONSTRUCTION

1. INSTALL STABILIZED CONSTRUCTION ENTRANCES.
2. PREPARE TEMPORARY PARKING AND STORAGE AREA.
3. CONSTRUCT THE SILT FENCES ON THE SITE
4. CONSTRUCT THE SEDIMENTATION AND SEDIMENT TRAP BASINS.
5. HALT ALL ACTIVITIES AND CONTACT THE CIVIL ENGINEERING CONSULTANT OR OWNERS REPRESENTATIVE TO PERFORM INSPECTION OF BMP'S. GENERAL CONTRACTOR SHALL SCHEDULE AND CONDUCT STORM WATER PRE-CONSTRUCTION MEETING WITH ENGINEER AND ALL GROUND DISTURBING CONTRACTORS BEFORE PROCEEDING WITH CONSTRUCTION.
6. CLEAR AND GRUB THE SITE.
7. START CONSTRUCTION OF SITE STRUCTURE
8. BEGIN GRADING THE SITE.
9. TEMPORARILY SEED DENUDED AREAS.
10. INSTALL UTILITIES, UNDERDRAINS, STORM SEWERS, CURBS AND GUTTERS.
11. INSTALL RIP RAP AROUND OUTLET STRUCTURES.
12. INSTALL INLET PROTECTION AROUND ALL STORM SEWER STRUCTURES.
13. PREPARE SITE FOR PAVING.
14. INSTALL INLET PROTECTION DEVICES.
15. COMPLETE GRADING AND INSTALL PERMANENT SEEDING AND PLANTING.
16. REMOVE ALL TEMPORARY EROSION AND SEDIMENT CONTROL DEVICES (ONLY IF SITE IS STABILIZED), IF REQUIRED BY THE CONTRACT.

NOTE: REFER TO SHEET C104 FOR GENERAL NOTES, MAINTENANCE NOTES, LOCATION MAPS AND STANDARD DETAILS.

LEGEND

- EXISTING CONTOUR
- 998 PROPOSED CONTOUR
- BOUNDARY LINE
- DRAINAGE/UTILITY EASEMENT
- EROSION CONTROL SILT FENCE SEE SHEET C106 DETAIL 2
- PROPOSED STORM SEWER
- PROPOSED ROCK CONSTRUCTION ENTRANCE SEE SHEET C106 DETAIL1
- x986.3 EXISTING SPOT ELEVATION
- EOF EMERGENCY OVERFLOW
- DRAINAGE DIRECTION
- X.XX PERCENT OF GRADE
- SB TEMPORARY SEDIMENT BASIN
- TSP TEMPORARY STORAGE AND PARKING AREA
- WO CONCRETE WASHOUT SEE SHEET C106 DETAIL 3
- PROPOSED STORM MANHOLE
- PROPOSED FES/FES WITH RIP RAP
- PROPOSED INLET PROTECTION SEE SHEET C106 DETAIL 4

SITE LOCATION MAP

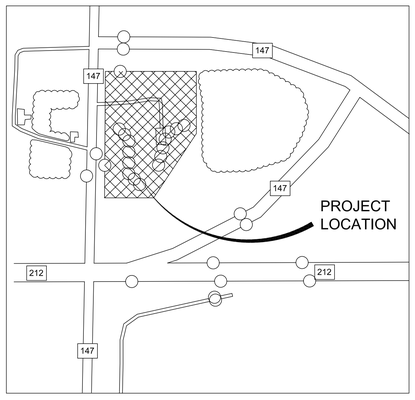

DEVELOPER / OWNER:

RON LAGERQUIST
FACILITIES MANAGEMENT SERVICES
MS 715 TRANSPORTATION BUILDING
395 JOHN IRELAND BLVD
ST PAUL MINNESOTA 55155

SITE OPERATOR / CONTRACTOR / GENERAL CONTRACTOR:

SUPERINTENDENT:

SOIL EROSION/SEDIMENTATION CONTROL OPERATION TIME SCHEDULE

NOTE: CONTRACTOR OR GENERAL CONTRACTOR TO COMPLETE TABLE WITH THEIR SPECIFIC PROJECT SCHEDULE

CONSTRUCTION SEQUENCE	JUL	AUG	SEP	OCT	NOV	DEC
TEMPORARY CONTROL MEASURES						
STRIP & STOCKPILE TOPSOIL						
ROUGH GRADE / SEDIMENT CONTROL						
TEMPORARY CONSTRUCTION ROADS						
STRUCTURE CONSTRUCTION						
SITE CONSTRUCTION						
PERMANENT CONTROL STRUCTURES						
FINISH GRADING						
LANDSCAPING / SEED / FINAL STABILIZATION						
STORM FACILITIES						

ARCHITECTURAL ALLIANCE

400 CLIFTON AVENUE SOUTH

MINNEAPOLIS, MINNESOTA 55403-3299

TELEPHONE (612) 871-5703

FAX (612) 871-7212

Structural Engineer

Meyer Borgman
12 South Sixth Street / Suite 810
Minneapolis, Minnesota 55402
(612) 338-0713

Mechanical, Electrical Engineer

Dunham Associates
50 South Sixth Street / Suite 1100
Minneapolis, Minnesota 55402
(612) 465-7550

Civil Engineers

EVS Inc.
10250 Valley View Road / Suite 12
Eden Praire, Minnesota 55344
(952) 646-0236

Landscape Architect

Damon Farber Associates
923 Nicollet Mall
Minneapolis, Minnesota 55402
(612) 332-7522

I hereby certify that this plan or drawing was prepared by me or under my direct supervision and that I am a duly licensed Engineer under the laws of the State of Minnesota.

For Architectural Alliance

By

Name Daniel E Bowar

Date 09/25/09 Reg. No. 45018

Issued for	Date
BID DOCUMENTS	09/25/09

Copyright 2009 Architectural Alliance

Comm. No. 2009019

Drawn PF/DB

Checked DEZ

Date 09/25/09

Project

MnDOT / Carver County
Chaska Truck Station

4725 Chaska Boulevard
Chaska, Mn 55318

Phase 1 - Erosion Control Plan

c102

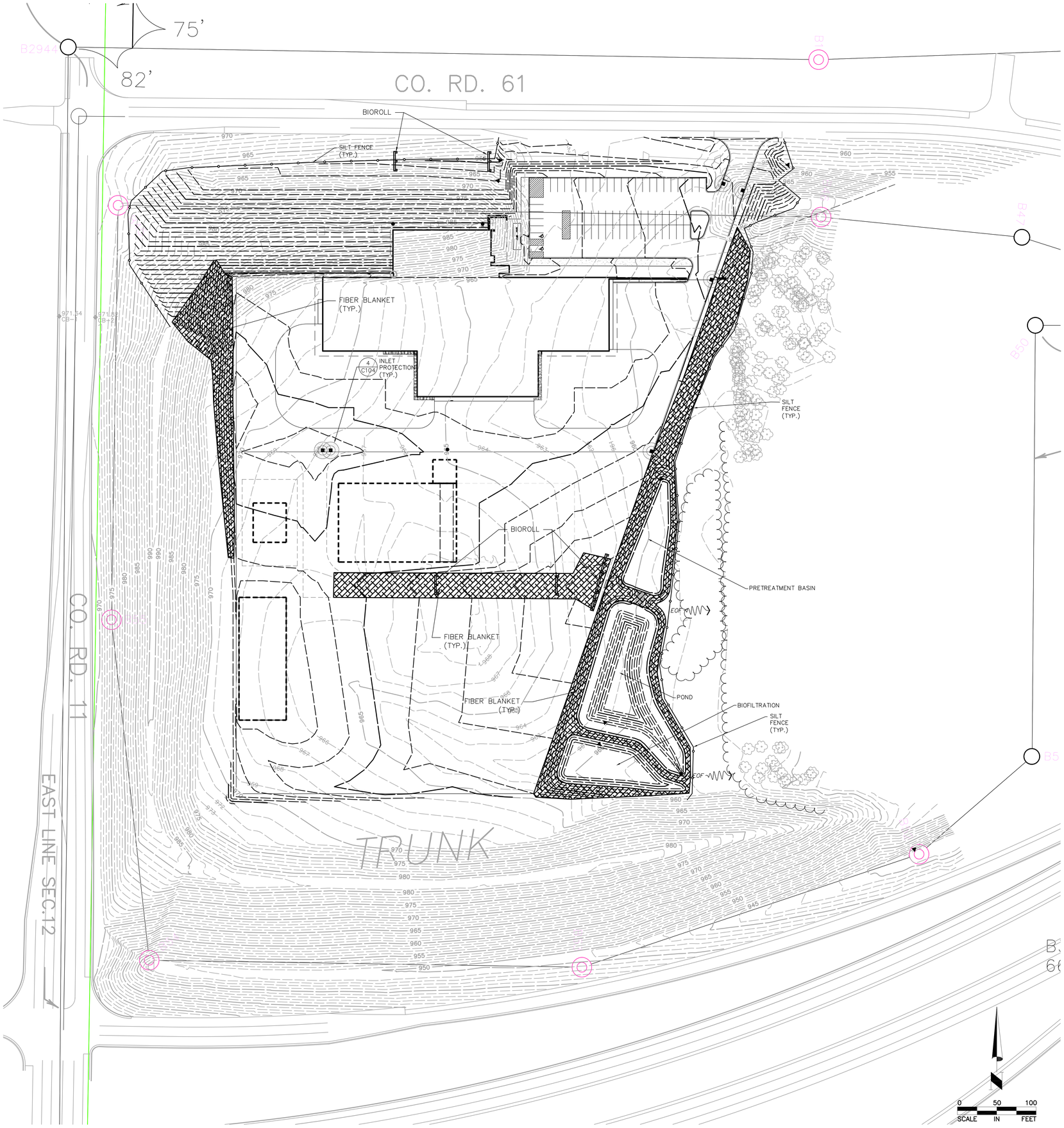

SEQUENCE OF CONSTRUCTION

1. INSTALL STABILIZED CONSTRUCTION ENTRANCES.
2. PREPARE TEMPORARY PARKING AND STORAGE AREA.
3. CONSTRUCT THE SILT FENCES ON THE SITE
4. CONSTRUCT THE SEDIMENTATION AND SEDIMENT TRAP BASINS.
5. HALT ALL ACTIVITIES AND CONTACT THE CIVIL ENGINEERING CONSULTANT TO PERFORM INSPECTION OF BMP'S. GENERAL CONTRACTOR SHALL SCHEDULE AND CONDUCT STORM WATER PRE-CONSTRUCTION MEETING WITH ENGINEER AND ALL GROUND DISTURBING CONTRACTORS BEFORE PROCEEEDING WITH CONSTRUCTION.
6. CLEAR AND GRUB THE SITE.
7. START CONSTRUCTION OF SITE STRUCTURE
8. BEGIN GRADING THE SITE.
9. TEMPORARILY SEED DENUDED AREAS.
10. INSTALL UTILITIES, UNDERDRAINS, STORM SEWERS, CURBS AND GUTTERS.
11. INSTALL RIP RAP AROUND OUTLET STRUCTURES.
12. INSTALL INLET PROTECTION AROUND ALL STORM SEWER STRUCTURES.
13. PREPARE SITE FOR PAVING.
14. INSTALL INLET PROTECTION DEVICES.
15. COMPLETE GRADING AND INSTALL PERMANENT SEEDING AND PLANTING.
16. REMOVE ALL TEMPORARY EROSION AND SEDIMENT CONTROL DEVICES (ONLY IF SITE IS STABILIZED), IF REQUIRED BY THE CONTRACT.

NOTE: REFER TO SHEET C104 FOR GENERAL NOTES, MAINTENANCE NOTES, LOCATION MAPS AND STANDARD DETAILS.

LEGEND

- EXISTING CONTOUR
- 998 PROPOSED CONTOUR
- BOUNDARY LINE
- DRAINAGE/UTILITY EASEMENT
- EROSION CONTROL SILT FENCE SEE SHEET C106 DETAIL 2
- PROPOSED STORM SEWER
- PROPOSED ROCK CONSTRUCTION ENTRANCE SEE SHEET C106 DETAIL1
- x986.3 EXISTING SPOT ELEVATION
- EOF EMERGENCY OVERFLOW
- DRAINAGE DIRECTION
- X.X% PERCENT OF GRADE
- SB TEMPORARY SEDIMENT BASIN
- TSP TEMPORARY STORAGE AND PARKING AREA
- WO CONCRETE WASHOUT SEE SHEET C106 DETAIL 3
- PROPOSED STORM MANHOLE
- PROPOSED FES/FES WITH RIP RAP
- PROPOSED INLET PROTECTION SEE SHEET C106 DETAIL 4
- BIOROLL SILT PROTECTION
- FIBER BLANKET - WITH Mn/DOT SEED MIX 310

NOTE: ALL DISTURBED AREAS ARE TO BE PERMANENTLY STABILIZED

DEVELOPER / OWNER:

RON LAGERQUIST
FACILITIES MANAGEMENT SERVICES
MS 715 TRANSPORTATION BUILDING
395 JOHN IRELAND BLVD
ST PAUL MINNESOTA 55155

SITE OPERATOR / CONTRACTOR / GENERAL CONTRACTOR:

SUPERINTENDENT:

SOIL EROSION/SEDIMENTATION CONTROL OPERATION TIME SCHEDULE

NOTE: CONTRACTOR OR GENERAL CONTRACTOR TO COMPLETE TABLE WITH THEIR SPECIFIC PROJECT SCHEDULE

CONSTRUCTION SEQUENCE	JUL	AUG	SEP	OCT	NOV	DEC
TEMPORARY CONTROL MEASURES						
STRIP & STOCKPILE TOPSOIL						
ROUGH GRADE / SEDIMENT CONTROL						
TEMPORARY CONSTRUCTION ROADS						
STRUCTURE CONSTRUCTION						
SITE CONSTRUCTION						
PERMANENT CONTROL STRUCTURES						
FINISH GRADING						
LANDSCAPING / SEED / FINAL STABILIZATION						
STORM FACILITIES						

ARCHITECTURAL ALLIANCE

400 CLIFTON AVENUE SOUTH

MINNEAPOLIS, MINNESOTA 55403-3299

TELEPHONE (612) 871-5703

FAX (612) 871-7212

Structural Engineer

Meyer Borgman
12 South Sixth Street / Suite 810
Minneapolis, Minnesota 55402
(612) 338-0713

Mechanical, Electrical Engineer

Dunham Associates
50 South Sixth Street / Suite 1100
Minneapolis, Minnesota 55402
(612) 465-7550

Civil Engineers

EVS Inc.
10250 Valley View Road / Suite 12
Eden Praire, Minnesota 55344
(952) 646-0236

Landscape Architect

Damon Farber Associates
923 Nicollet Mall
Minneapolis, Minnesota 55402
(612) 332-7522

I hereby certify that this plan or drawing was prepared by me or under my direct supervision and that I am a duly licensed Engineer under the laws of the State of Minnesota.

For Architectural Alliance

By

Name Daniel E Bower

Date 09/25/09 Reg. No. 45018

Issued for	Date
BID DOCUMENTS	09/25/09

Copyright 2009 Architectural Alliance

Comm. No. 2009019

Drawn PF/DB

Checked DEZ

Date 09/25/09

Project

MnDOT / Carver County
Chaska Truck Station

4725 Chaska Boulevard
Chaska, Mn 55318

Phase 2 - Erosion Control Plan

c103

AREA MAP

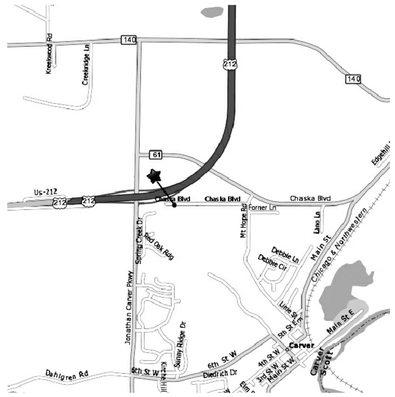

USGS MAP

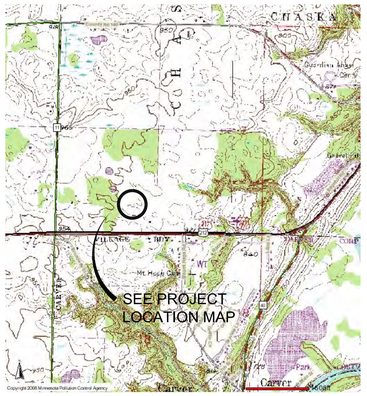

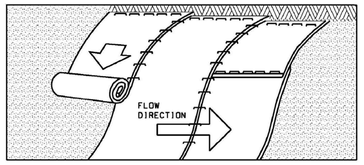

SLOPE INSTALLATION

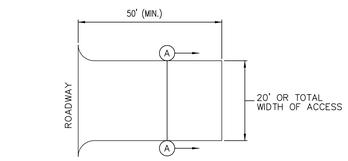

PLAN VIEW

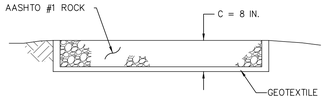

SECTION A–A

MAINTENANCE: ROCK CONSTRUCTION ENTRANCE THICKNESS SHALL BE CONSTANTLY MAINTAINED TO THE SPECIFIED DIMENSIONS BY ADDING ROCK. A STOCKPILE SHALL BE MAINTAINED ON SITE FOR THIS PURPOSE. AT THE END OF EACH CONSTRUCTION DAY, ALL SEDIMENT DEPOSITED ON PAVED ROADWAYS SHALL BE REMOVED AND RETURNED TO THE CONSTRUCTION SITE.

1 STABILIZED ROCK CONST. ENTRANCE

NOT TO SCALE

NOTES:

1. PREPARE SOIL BEFORE INSTALLING BLANKETS, INCLUDING APPLICATION OF LIME, FERTILIZER, AND SEED.
2. BEGIN AT THE TOP OF THE SLOPE (OR CHANNEL) BY ANCHORING THE BLANKET IN A 6" DEEP X 6" WIDE TRENCH. BACKFILL AND COMPACT THE TRENCH AFTER STAPLING.
3. ROLL THE BLANKETS DOWN (STARTING AT DOWNSTREAM PROCEEDING UPSTREAM) HORIZONTALLY ACROSS THE SLOPE.
4. THE EDGES OF PARALLEL BLANKETS MUST BE STAPLED WITH AN APPROXIMATE (MIN) 4" OVERLAP.
5. WHEN BLANKETS MUST BE SPLICED DOWN THE SLOPE, PLACE BLANKETS END OVER END (SHINGLE STYLE) WITH APPROXIMATELY A (MIN) 6" OVERLAP. USE A DOUBLE ROW OF STAGGERED STAPLES 4" APART TO SECURE BLANKETS.
6. IN HIGH FLOW CHANNEL APPLICATIONS, A STAPLE CHECK SLOT IS RECOMMENDED AT 30 TO 40 FOOT INTERVALS. USE A ROW OF STAPLES 4" APART OVER ENTIRE WIDTH OF THE CHANNEL. PLACE A SECOND ROW 4" BELOW THE FIRST ROW IN A STAGGERED PATTERN.
7. THE TERMINAL END OF THE BLANKETS MUST BE ANCHORED IN A 6" DEEP X 6" WIDE TRENCH. BACKFILL AND COMPACT THE TRENCH AFTER STAPLING.

NOT TO SCALE

REVISED:01-01-09

EROSION CONTROL BLANKET DETAIL

5 EROSION CONTROL FIBER BLANKET

NOT TO SCALE

GENERAL EROSION NOTES:

1. CONSTRUCTION SHALL COMPLY WITH ALL APPLICABLE GOVERNING CODES AND BE CONSTRUCTED TO SAME. WHERE A CONFLICT EXISTS BETWEEN LOCAL JURISDICTIONAL STANDARD SPECIFICATIONS AND **EVS INC.** STANDARD SPECIFICATIONS, THE MORE STRINGENT SPECIFICATION SHALL APPLY.
2. THE CONTRACTOR IS SPECIFICALLY CAUTIONED THAT THE LOCATIONS AND/OR ELEVATIONS OF EXISTING UTILITIES AS SHOWN ON THESE PLANS ARE BASED ON RECORDS OF THE VARIOUS UTILITY COMPANIES AND, WHERE POSSIBLE, MEASUREMENTS TAKEN IN THE FIELD. THE SUBSURFACE UTILITY INFORMATION SHOWN ON THESE PLANS IS A UTILITY QUALITY LEVEL D. THIS QUALITY LEVEL WAS DETERMINED ACCORDING TO THE GUIDELINES OF CI/ASCE 38–02, ENTITLED "STANDARD GUIDELINES FOR THE COLLECTION AND DEPICTION OF EXISTING SUBSURFACE UTILITY DATA." THE INFORMATION IS NOT TO BE RELIED ON AS BEING EXACT OR COMPLETE. THE CONTRACTOR MUST CONTACT ALL THE APPROPRIATE UTILITY COMPANIES AT LEAST 48 HOURS BEFORE ANY EXCAVATION TO REQUEST EXACT FIELD LOCATION OF UTILITIES. IT SHALL BE THE RESPONSIBILITY OF THE CONTRACTOR TO RELOCATE ALL EXISTING UTILITIES WHICH CONFLICT WITH THE PROPOSED IMPROVEMENTS SHOWN ON THE PLANS. THE LOCATIONS OF SMALL UTILITIES SHALL BE OBTAINED BY THE CONTRACTOR BY CALLING MINNESOTA GOPHER STATE ONE CALL AT 800–252–1166 OR 651–454–0002
3. THE DESIGN SHOWN IS BASED UPON THE ENGINEER'S UNDERSTANDING OF THE EXISITING CONDITIONS. IF CONTRACTOR DOES NOT ACCEPT EXISTING TOPOGRAPHY AS SHOWN ON THE PLANS WITHOUT EXCEPTION, THEY SHALL HAVE MADE, AT THEIR EXPENSE, A TOPOGRAPHIC SURVEY BY A REGISTERED LAND SURVEYOR AND SUBMIT IT TO THE OWNER FOR REVIEW. SEE ATTACHED SURVEY SHEETS.
4. THE GENERAL CONTRACTOR SHALL TAKE ALL PRECAUTIONS NECESSARY TO AVOID PROPERTY DAMAGE TO ADJACENT PROPERTIES DURING THE CONSTRUCTION PHASES OF THIS PROJECT. THE CONTRACTOR WILL BE HELD SOLELY RESPONSIBLE FOR ANY DAMAGES OCCURRING TO THE ADJACENT PROPERTIES DURING THE CONSTRUCTION PHASES OF THIS PROJECT.
5. THE STORMWATER POLLUTION PREVENTION PLAN (SWPPP) IS COMPRISED OF THIS DRAWING (EROSION & SEDIMENTATION CONTROL PLAN–ESC PLAN), THE STANDARD DETAILS, THE PLAN NARRATIVE, ATTACHMENTS INCLUDED IN THE STORMWATER COMPLIANCE BINDER, PLUS THE PERMIT AND ALL SUBSEQUENT REPORTS AND RELATED DOCUMENTS.
6. THE CONTRACTOR SHALL BE RESPONSIBLE FOR COMPLETING & SUBMITTING THE APPLICATION FOR THE MPCA GENERAL STORMWATER PERMIT FOR CONSTRUCTION ACTIVITY. ALL CONTRACTORS AND SUBCONTRACTORS INVOLVED WITH STORM WATER POLLUTION PREVENTION SHALL OBTAIN A COPY OF THE SWPPP AND THE STATE OF MINNESOTA NATIONAL POLLUTANT DISCHARGE ELIMINATION SYSTEM GENERAL PERMIT (NPDES PERMIT) AND BECOME FAMILIAR WITH THEIR CONTENTS. **THE SWPPP AND ALL OTHER RELATED DOCUMENTS MUST BE KEPT AT THE SITE DURING CONSTRUCTION**.
7. CONTRACTOR SHALL IMPLEMENT BEST MANAGEMENT PRACTICES (BMP'S) AS REQUIRED BY THE SWPPP & PERMITS. THE CONTRACTOR SHALL OVERSEE THE INSPECTION & MAINTENANCE OF THE BMP'S AND EROSION PREVENTION FROM BEGINNING OF CONSTRUCTION AND UNTIL CONSTRUCTION IS COMPLETED, IS APPROVED BY ALL AUTHORITIES, THE NOTICE OF TERMINATION (NOT) HAS BEEN FILED WITH THE MPCA BY EITHER THE OWNER OR OPERATOR AS APPROVED ON PERMIT. ADDITIONAL BMP'S SHALL BE IMPLEMENTED AS DICTATED BY CONDITIONS AT NO ADDITIONAL COST TO OWNER THROUGHOUT ALL PHASES OF CONSTRUCTION.
8. BMP'S AND CONTROLS SHALL CONFORM TO FEDERAL, STATE, OR LOCAL REQUIREMENTS OR MANUAL OF PRACTICE, AS APPLICABLE. CONTRACTOR SHALL IMPLEMENT ADDITIONAL CONTROLS AS DIRECTED BY PERMITTING AGENCY OR OWNER.
9. ESC PLAN MUST CLEARLY DELINEATE ALL STATE WATERS. PERMITS FOR ANY CONSTRUCTION ACTIVITY IMPACTING STATE WATERS OR REGULATED WETLANDS MUST BE MAINTAINED ON SITE AT ALL TIMES.
10. CONTRACTOR SHALL MINIMIZE CLEARING TO THE MAXIMUM EXTENT PRACTICAL OR AS REQUIRED BY THE GENERAL PERMIT. THE BOUNDARIES OF THE CLEARING LIMITS SHOWN ON THIS PLAN SHALL BE CLEARLY DELINEATED (E.G. WITH FLAGS, STAKES, SIGNS, SILT FENCE, ETC.) ON THE DEVELOPMENT SITE BEFORE WORK BEGINS.
11. GENERAL CONTRACTOR SHALL DENOTE ON PLAN THE TEMPORARY PARKING AND STORAGE AREA WHICH SHALL ALSO BE USED AS THE EQUIPMENT MAINTENANCE AND CLEANING AREA, EMPLOYEE PARKING AREA, AND AREA FOR LOCATING PORTABLE FACILITIES, OFFICE TRAILERS, AND TOILET FACILITIES.
12. ALL WASH WATER (CONCRETE TRUCKS, VEHICLE CLEANING, EQUIPMENT CLEANING, ETC.) MUST BE LIMITED TO A DEFINED AREA OF THE SITE AND SHALL BE CONTAINED AND PROPERLY TREATED OR DISPOSED. NO ENGINE DEGREASING IS ALLOWED ON SITE.
13. SUFFICIENT OIL AND GREASE ABSORBING MATERIALS AND FLOTATION BOOMS SHALL BE MAINTAINED ON SITE OR READLY AVAILABLE TO CONTAIN AND CLEAN–UP FUEL OR CHEMICAL SPILLS AND LEAKS.
14. DUST ON THE SITE SHALL BE CONTROLLED. THE USE OF MOTOR OILS AND OTHER PETROLEUM BASED OR TOXIC LIQUIDS FOR DUST SUPPRESSION OPERATIONS IS PROHIBITED.
15. SOLID WASTE: COLLECTED SEDIMENT, ASPHALT & CONCRETE MILLINGS, FLOATING DEBRIS, PAPER, PLASTIC, FABRIC, CONSTRUCTION & DEMOLITION DEBRIS & OTHER WASTES MUST BE DISPOSED OF PROPERLY & MUST COMPLY WITH MPCA DISPOSAL REQUIREMENTS.
16. HAZARDOUS MATERIALS: OIL, GASOLINE, PAINT & ANY HAZARDOUS SUBSTANCES MUST BE PROPERLY STORED, INCLUDING SECONDARY CONTAINMENT, TO PREVENT SPILLS, LEAKS OR OTHER DISCHARGE. RESTRICTED ACCESS TO STORAGE AREAS MUST BE PROVIDED TO PREVENT VANDALISM. STORAGE & DISPOSAL OF HAZARDOUS WASTE MUST BE IN COMPLIANCE WITH MPCA REGULATIONS.
17. ALL STORM WATER POLLUTION PREVENTION MEASURES PRESENTED ON THIS PLAN, AND IN THE SWPPP, SHALL BE INITIATED AS SOON AS PRACTICABLE AND PRIOR TO ANY SITEWORK.
18. DISTURBED PORTIONS OF THE SITE WHERE CONSTRUCTION ACTIVITY HAS STOPPED SHALL BE TEMPORARILY SEEDED. SEEDING SHALL BE IN ACCORDANCE WITH MN/DOT SPEC. 2575 @ 100LBS/ACRE (OR APPROVED EQUAL) AND IN ACCORDANCE WITH THE FOLLOWING GUIDELINES:

TYPE OF SLOPE	TIME (MAX TIME AN AREA CAN REMAIN OPEN WHEN THE AREA IS NOT ACTIVELY BEING WORKED)
STEEPER THAN 3:1	7 DAYS
FLATTER THAT 3:1	7 DAYS

19. DISTURBED PORTIONS OF THE SITE WHERE CONSTRUCTION ACTIVITY HAS PERMANENTLY STOPPED SHALL BE PERMANENTLY SEEDED. THESE AREAS SHALL BE SEEDED IN ACCORDANCE WITH THE TIME TABLE DESCRIBED ABOVE. REFER TO THE GRADING PLAN AND/OR LANDSCAPE PLAN FOR VEGETATIVE COVER.
20. CONTRACTORS OR SUBCONTRACTORS WILL BE RESPONSIBLE FOR REMOVING SEDIMENT FROM CONVEYANCES & FROM TEMPORARY SEDIMENTATION BASINS THAT ARE TO BE USED AS PERMANENT WATER QUALITY MANAGEMENT BASINS. SEDIMENT MUST BE STABILIZED TO PREVENT IT FROM BEING WASHED BACK INTO THE BASIN, CONVEYANCES, OR DRAINAGEWAYS DISCHARGING OFF–SITE OR TO SURFACE WATERS. THE CLEANOUT OF PERMANENT BASINS MUST BE SUFFICIENT TO RETURN THE BASIN TO DESIGN CAPACITY.
21. ON–SITE & OFF–SITE SOIL STOCKPILE AND BORROW AREAS SHALL BE PROTECTED FROM EROSION AND SEDIMENTATION THROUGH IMPLEMENTATION OF BMP'S. STOCKPILE AND BORROW AREA LOCATIONS SHALL BE NOTED ON THE SITE MAP AND PERMITTED IN ACCORDANCE WITH GENERAL PERMIT REQUIREMENTS.
22. TEMPORARY SOIL STOCKPILES MUST HAVE SILT FENCE OR OTHER EFFECTIVE SEDIMENT CONTROLS & CANNOT BE PLACED IN SURFACE WATERS, INCLUDING STORMWATER CONVEYANCES SUCH AS CURB & GUTTER SYSTEMS OR CONDUITS & DITCHES.
23. SLOPES SHALL BE LEFT IN A ROUGHENED CONDITION DURING THE GRADING PHASE TO REDUCE RUNOFF VELOCITIES AND EROSION.
24. DUE TO THE GRADE CHANGES DURING THE DEVELOPMENT OF THE PROJECT, THE CONTRACTOR SHALL BE RESPONSIBLE FOR ADJUSTING THE EROSION CONTROL MEASURES (SILT FENCES, CHECK DAMS, INLET PROTECTION DEVICES, ETC.) TO PREVENT EROSION.
25. ALL CONSTRUCTION SHALL BE STABILIZED AT THE END OF EACH WORKING DAY, THIS INCLUDES BACKFILLING OF TRENCHES FOR UTILITY CONSTRUCTION AND PLACEMENT OF GRAVEL OR BITUMINOUS PAVING FOR ROAD CONSTRUCTION.

MAINTENANCE:

ALL MEASURES STATED ON THIS EROSION AND SEDIMENT CONTROL PLAN, AND IN THE STORM WATER POLLUTION PREVENTION PLAN SHALL BE MAINTAINED IN FULLY FUNCTIONAL CONDITION UNTIL NO LONGER REQUIRED FOR A COMPLETED PHASE OF WORK OR FINAL STABILIZATION OF THE SITE. THE DESIGNATED CONTACT PERSON NOTED ON THIS PLAN MUST ROUTINELY INSPECT THE CONSTRUCTION ON SITE ONCE EVERY SEVEN DAYS DURING ACTIVE CONTRUCTION AND WITHIN 24 HOURS AFTER A RAINFALL EVENT GREATER THAN 0.5 INCHES IN 24 HOURS. ALL EROSION AND SEDIMENTATION CONTROL MEASURES SHALL BE CLEANED AND REPAIRED IN ACCORDANCE WITH THE FOLLOWING:

1. ALL STORM DRAIN INLETS MADE OPERABLE DURING CONSTRUCTION MUST BE PROTECTED BY APPROPRIATE BMP'S UNTIL ALL SOURCES WITH POTENTIAL FOR DISCHARGING TO THE INLET HAVE BEEN STABILIZED.
2. ALL SEEDED AREAS SHALL BE CHECKED REGULARLY TO SEE THAT A GOOD STAND IS MAINTAINED. AREAS SHOULD BE FERTILIZED, WATERED, AND RESEEDED AS NEEDED.
3. SILT FENCES SHALL BE REPAIRED, REPLACED OR SUPPLEMENTED TO THEIR ORIGINAL CONDITIONS IF DAMAGED. SEDIMENT SHALL BE REMOVED FROM THE SILT FENCES WHEN IT REACHES ONE–THIRD THE HEIGHT OF THE SILT FENCE. THESE REPAIRS MUST BE MADE WITHIN 24 HOURS OF DISCOVERY, OR AS SOON AS FIELD CONDITIONS ALLOW ACCESS.
4. VEHICLE TRACKING OF SEDIMENT FROM THE CONSTRUCTION SITE MUST BE MINIMIZED BY BMP'S SUCH AS STONE PADS, CONCRETE OR STEEL WASH RACKS, OR EQUIVALENT SYSTEMS. STREET SWEEPING MUST BE USED IF SUCH BMP'S ARE NOT ADEQUATE TO PREVENT SEDIMENT FROM BEING TRACKED ONTO THE STREET. TRACKED SEDIMENT MUST BE REMOVED FROM ALL OFF–SITE PAVED SURFACES WITHIN 24 HOURS OF DISCOVERY OR SOONER.
5. THE TEMPORARY PARKING AND STORAGE AREA SHALL BE KEPT IN GOOD CONDITION (SUITABLE FOR PARKING AND STORAGE). THIS MAY REQUIRE PERIODIC TOP DRESSING OF THE TEMPORARY PARKING AS CONDITIONS DEMAND.
6. OUTLET STRUCTURES IN THE TEMPORARY AND PERMANENT SEDIMENTATION BASINS SHALL BE MAINTAINED IN OPERATIONAL CONDITIONS AT ALL TIMES. SEDIMENT SHALL BE REMOVED FROM SEDIMENT BASINS OR TRAPS WHEN THE DESIGN CAPACITY REACHES ONE–HALF THE STORAGE VOLUME. DRAINAGE & REMOVAL MUST BE COMPLETED WITHIN 72 HOURS OF DISCOVERY OR AS SOON AS FIELD CONDITIONS ALLOW ACCESS.

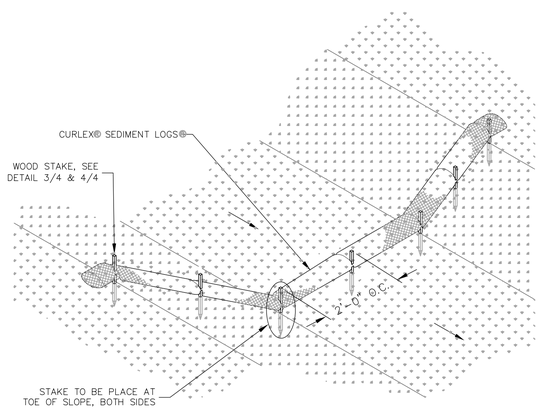

6 SEDIMENT LOG (BIOROLL) SWALE PROTECTION

NOT TO SCALE

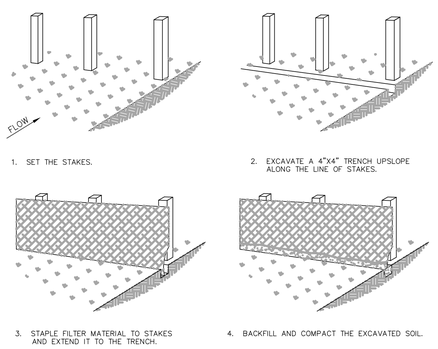

NOTES:
FABRIC AS PER MNDOT SPEC. 3886
8 FOOT MAXIMUM SPACING BETWEEN WOOD STAKES.
1.5 FEET MINIMUM EMBEDMENT.
6 TO 8 INCHES OF FABRIC EXTEND INTO TRENCH.
2"X2"X4' MINIMUM DIMENSIONS PER WOOD STAKE.
PREASSEMBLED SILT FENCE IS ACCEPTABLE PER MN–DOT SPEC. 3886.

2 SILT FENCE

NOT TO SCALE

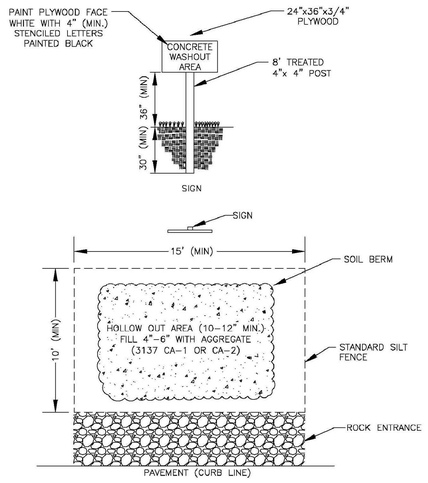

CONTRACTOR TO PLACE THE CONCRETE WASHOUT AREA NEAR THE CONSTRUCTION ENTRANCE

3 CONC. WASHOUT AREA

NOT TO SCALE

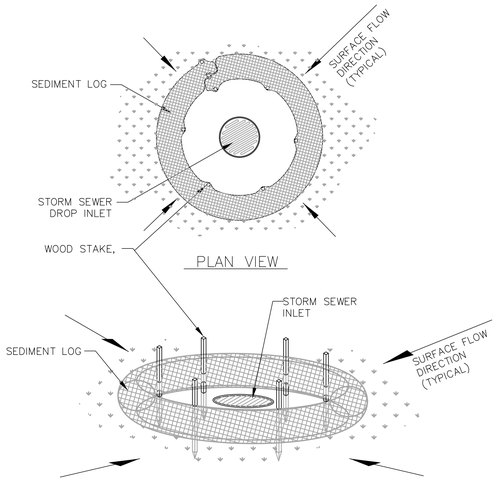

4 INLET PROTECTION

NOT TO SCALE

ARCHITECTURAL ALLIANCE

400 CLIFTON AVENUE SOUTH

MINNEAPOLIS, MINNESOTA 55403-3299

TELEPHONE (612) 871-5703

FAX (612) 871-7212

Structural Engineer

Meyer Borgman
12 South Sixth Street / Suite 810
Minneapolis, Minnesota 55402
(612) 338-0713

Mechanical, Electrical Engineer

Dunham Associates
50 South Sixth Street / Suite 1100
Minneapolis, Minnesota 55402
(612) 465-7550

Civil Engineers

EVS Inc.
10250 Valley View Road / Suite 12
Eden Praire, Minnesota 55344
(952) 646-0236

Landscape Architect

Damon Farber Associates
923 Nicollet Mall
Minneapolis, Minnesota 55402
(612) 332-7522

I hereby certify that this plan or drawing was prepared by me or under my direct supervision and that I am a duly licensed Engineer under the laws of the State of Minnesota.

For Architectural Alliance

By

Name Daniel E Bowar

Date 09/25/09 Reg. No. 45018

Issued for	Date
BID DOCUMENTS	09/25/09

Copyright 2009 Architectural Alliance

Comm. No. 2009019

Drawn PF/DB

Checked DEZ

Date 09/25/09

Project

MnDOT / Carver County
Chaska Truck Station

4725 Chaska Boulevard
Chaska, Mn 55318

Erosion Control
Notes and Details

c104

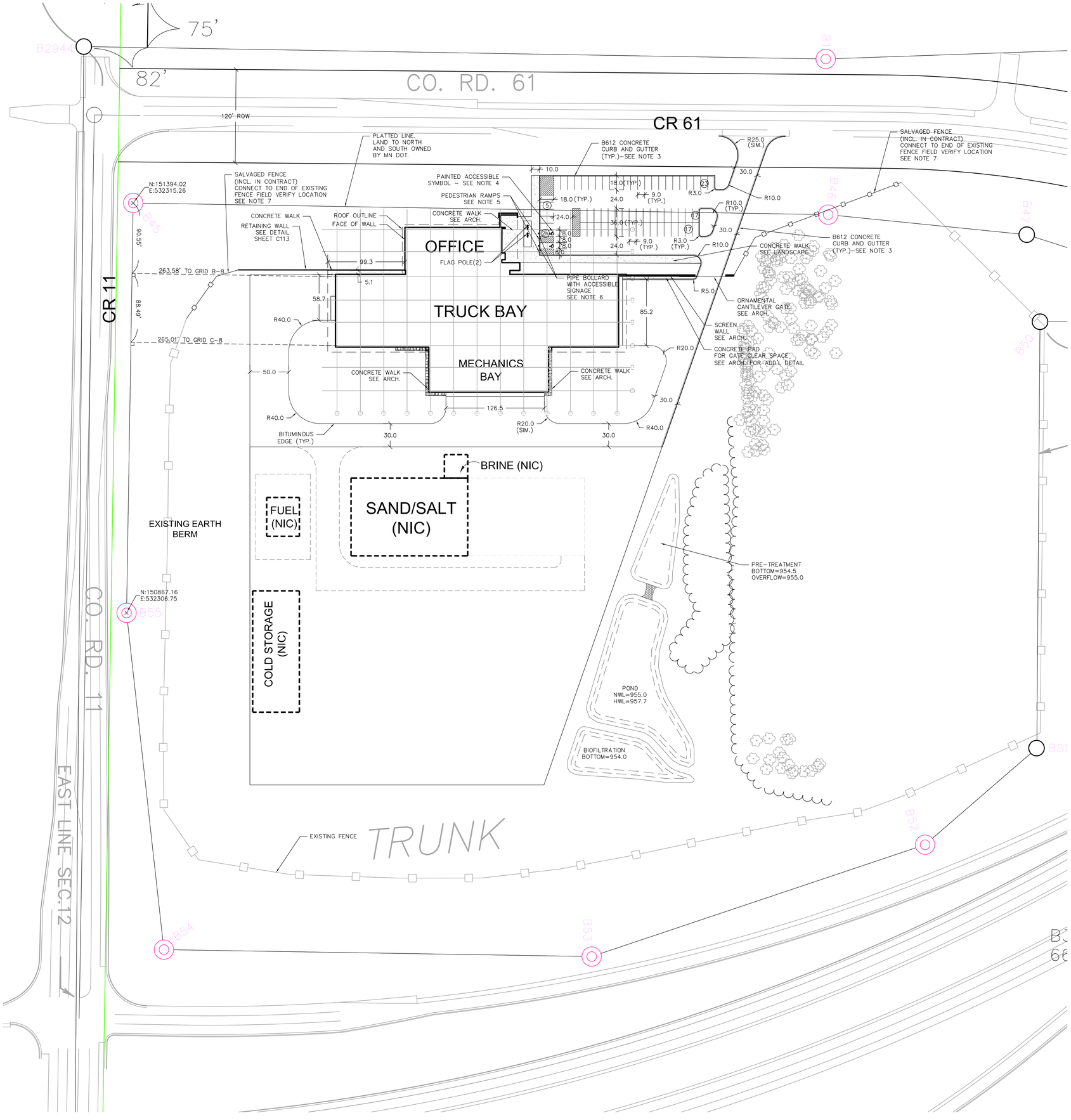

SITE NOTES

1. ALL DIMENSIONS TO FACE OF CURB UNLESS NOTED OTHERWISE
2. ALL CURB RADII ARE 3' UNLESS NOTED OTHERWISE
3. SEE SHEET C112, DETAIL 8
4. SEE SHEET C112, DETAIL 7
5. SEE SHEET C111, DETAIL 4,5
6. SEE DETAIL 1, THIS SHEET
7. SEE SHEET C111 DETAIL 8

ZONING SUMMARY

EXISTING:

R2: MEDIUM-DENSITY RESIDENTIAL DISTRICT

PROPOSED:

P1: PUBLIC-OPEN SPACE DISTRICT

PARKING SUMMARY

STANDARD (9' X 18') = 62
ACCESSIBLE (16' X 18') =2
TOTAL = 65

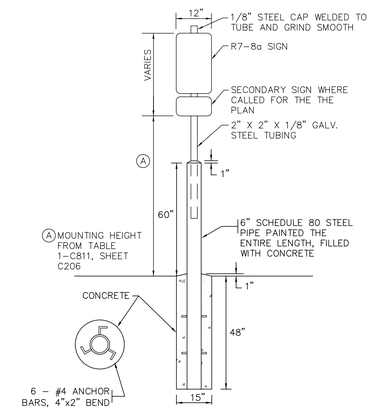

1 PIPE BOLLARD WITH SIGN

NOT TO SCALE

ARCHITECTURAL ALLIANCE

400 CLIFTON AVENUE SOUTH

MINNEAPOLIS, MINNESOTA 55403-3299

TELEPHONE (612) 871-5703

FAX (612) 871-7212

Structural Engineer

Meyer Borgman

12 South Sixth Street / Suite 810
Minneapolis, Minnesota 55402
(612) 338-0713

Mechanical, Electrical Engineer

Dunham Associates

50 South Sixth Street / Suite 1100
Minneapolis, Minnesota 55402
(612) 465-7550

Civil Engineers

EVS Inc.

10250 Valley View Road / Suite 12
Eden Praire, Minnesota 55344
(952) 646-0236

Landscape Architect

Damon Farber Associates

923 Nicollet Mall
Minneapolis, Minnesota 55402
(612) 332-7522

I hereby certify that this plan or drawing was prepared by me or under my direct supervision and that I am a duly licensed Engineer under the laws of the State of Minnesota.

For Architectural Alliance

By

Name Daniel E Bowar

Date 09/25/09 Reg. No. 45018

Issued for	Date
BID DOCUMENTS	09/25/09

Copyright 2009 Architectural Alliance

Comm. No. 2009019

Drawn PF/DB

Checked DEZ

Date 09/25/09

Project

MnDOT / Carver County
Chaska Truck Station

4725 Chaska Boulevard
Chaska, Mn 55318

Site Plan

0 50 100
SCALE IN FEET

c105

GRADING NOTES

1. CONTRACTOR SHALL FIELD VERIFY THE LOCATIONS AND ELEVATIONS OF EXISTING UTILITIES AND TOPOGRAPHIC FEATURES PRIOR TO START OF SITE GRADING. THE CONTRACTOR SHALL IMMEDIATELY NOTIFY THE COUNCIL'S AUTHORITY REPRESENTATIVE (CAR) OF ANY DISCREPANCIES OR VARIATIONS FROM PLANS.
2. CONTRACTOR IS TO CONTACT "GOPHER STATE ONE CALL" FOR UTILITY LOCATIONS - (651)454-0002 48 HOURS PRIOR TO EXCAVATION\CONSTRUCTION.
3. REFER TO SHEET C102 FOR HORIZONTAL DIMENSIONS AND LAYOUT.
4. THE SITE GRADING OPERATIONS, WHEN COMPLETED SHALL RESULT IN ALL AREAS BEING GRADED TO "PLAN SUBGRADE ELEVATION". THE "PLAN SUBGRADE ELEVATION" IN THE PARKING LOT AND DRIVEWAY AREAS SHALL BE DETERMINED BY CHECKING THE PAVEMENT SECTION DETAILS, AND REFERRING TO PAVING PLAN FOR LOCATION AND LIMITS OF VARIOUS PAVEMENT SECTIONS. AREAS NOT PAVED UNDER THIS CONTRACT SHALL REMAIN AT SUBGRADE ELEVATION.

5 SEE SHEET C207 DETAIL 8.

6 SEE SHEET C201 DETAIL 10.

7. SPOT ELEVATIONS AND CONTOURS SHOWN REPRESENT FINISHED ELEVATION IN ALL PAVING AND LANDSCAPE AREAS.

GRADING NOTES

EOF DENOTES EMERGENCY OVERFLOW

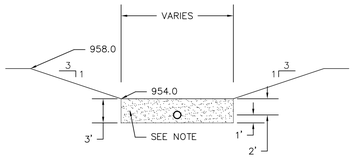

NOTE: PROVIDE 3' OF SANDY MATERIAL MIX. BEND SAND WITH COMPOST. (70% SAND AND 30% COMPOST) SAND=SAFETY GRIT OR MNDOT 3149.2J MULCH=MNDOT 3890 GRADE 2

BIOFILTRATION DETAIL A-A

ARCHITECTURAL ALLIANCE

400 CLIFTON AVENUE SOUTH

MINNEAPOLIS, MINNESOTA 55403-3299

TELEPHONE (612) 871-5703

FAX (612) 871-7212

Structural Engineer

Meyer Borgman

12 South Sixth Street / Suite 810
Minneapolis, Minnesota 55402
(612) 338-0713

Mechanical, Electrical Engineer

Dunham Associates

50 South Sixth Street / Suite 1100
Minneapolis, Minnesota 55402
(612) 465-7550

Civil Engineers

EVS Inc.

10250 Valley View Road / Suite 12
Eden Prairie, Minnesota 55344
(952) 646-0236

Landscape Architect

Damon Farber Associates

923 Nicollet Mall
Minneapolis, Minnesota 55402
(612) 332-7522

I hereby certify that this plan or drawing was prepared by me or under my direct supervision and that I am a duly licensed Engineer under the laws of the State of Minnesota.

For Architectural Alliance

By

Name Daniel E Bowar

Date 09/25/09 Reg. No. 45018

Issued for	Date
BID DOCUMENTS	09/25/09

Copyright 2009 Architectural Alliance

Comm. No. 2009019

Drawn PF/DB

Checked DEZ

Date 09/25/09

Project

MnDOT / Carver County
Chaska Truck Station

4725 Chaska Boulevard
Chaska, Mn 55318

Grading Plan

0 50 100
SCALE IN FEET

c106

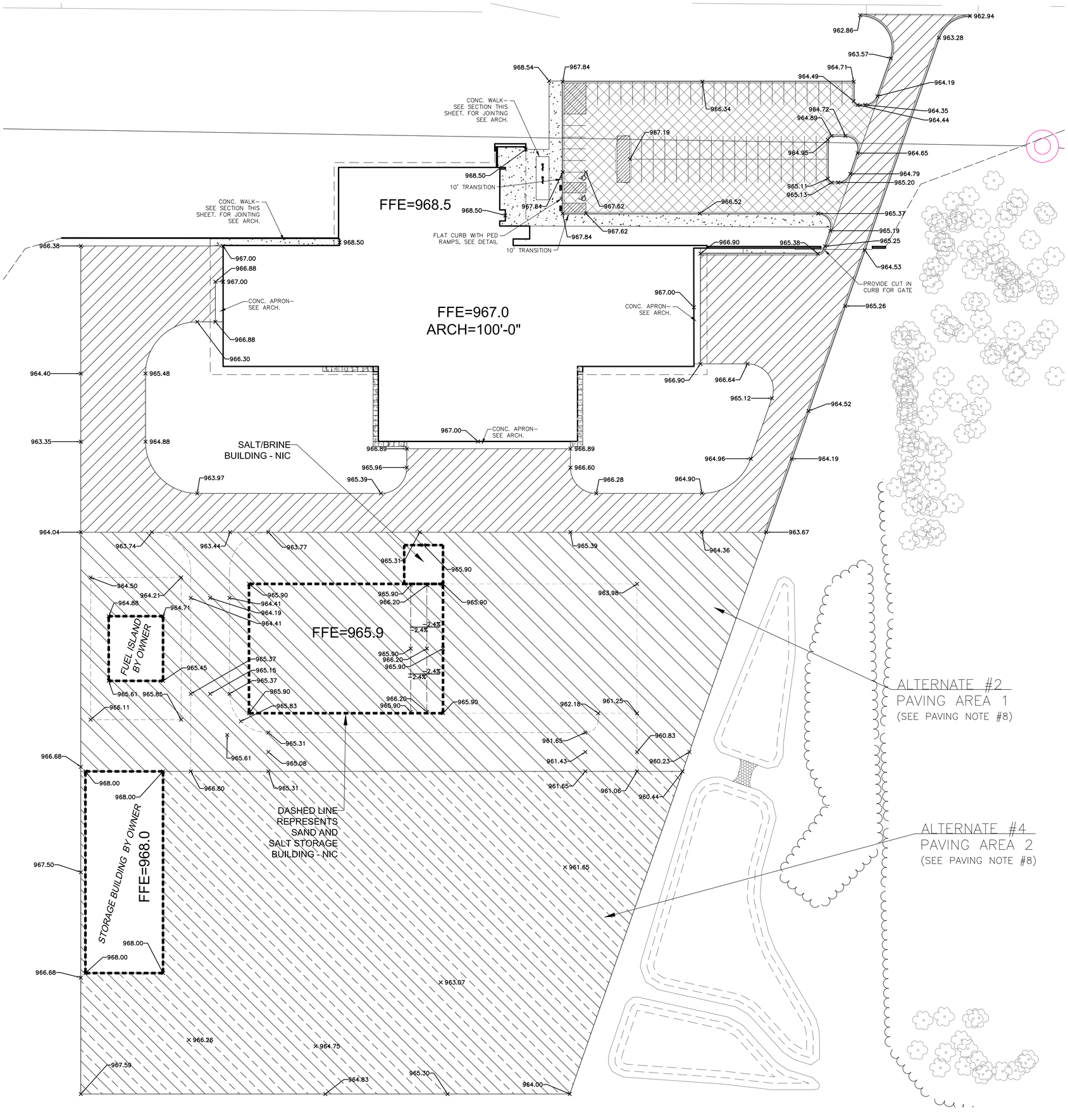

PAVING NOTES

1. COORDINATE WITH SHEET C108 FOR DRAINAGE STRUCTURES
2. ALL SPOT ELEVATIONS SHOWN AT FLOW LINE OF GUTTER UNLESS NOTED OTHERWISE.
3. IN PARKING AREAS PROVIDE: PAVEMENT SECTION SHOWN ON THIS SHEET.
4. ALL BITUMINOUS MIXES WILL BE COMPACTED USING THE MAXIMUM DENSITY COMPACTION METHOD.
5. PAVEMENT MARKING - THE WHITE AND ORGANIC PIGMENTED YELLOW PAINTS SHALL BE FREE OF TOXIC HEAVY METALS. THE CONTRACTOR MAY FURNISH AND PLACE EITHER THE 3-MINUTE ALKYD OR THE WATER-BASE MATERIAL (THE LATTER REQUIRES STAINLESS STEEL COMPONENTS IN THE DELIVERY SYSTEM.)
6. SELECT GRANULAR MATERIAL TO BE MNDOT SPECIFICATION 3149.2B2 MODIFIED SO THAT THE RATIO OF THE PORTION PASSING THE #200 SIEVE DIVIDED BY THE PORTION PASSING THE 1 INCH SIEVE MAY NOT EXCEED 8% MAXIMUM PERCENT BY MASS.
7. SPOT ELEVATIONS AND CONTOURS SHOWN REPRESENT FINISHED ELEVATION IN ALL PAVING AND LANDSCAPE AREAS.
8. ALTERNATE AREAS ARE TO BE GRADED TO SUBGRADE ELEVATION AS PART OF BASE BID. IF ALTERNATES ARE NOT SELECTED DISTURBED AREAS SHALL BE SEEDED PER GENERAL EROSION CONTROL NOTES AND MODIFIED IN THE SWPPP.
9. CONTRACTOR TO COORDINATE INSTALLATION OF PAVEMENT AND FINAL GRADING AROUND OWNER PROVIDED ITEMS WITH OWNER.

LEGEND

- BITUMINOUS PAVEMENT - LIGHT DUTY ..... 1 / C107
- BITUMINOUS PAVEMENT - HEAVY DUTY ..... 2 / C107
- CONCRETE PAVING ..... 3 / C107
- BITUMINOUS PAVEMENT (ALT#2) - HEAVY DUTY ..... 2 / C107
- BITUMINOUS PAVEMENT (ALT #4) - HEAVY DUTY ..... 2 / C107

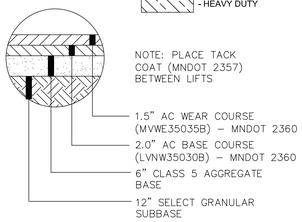

1 BITUMINOUS PAVEMENT-LT. DUTY

NOT TO SCALE

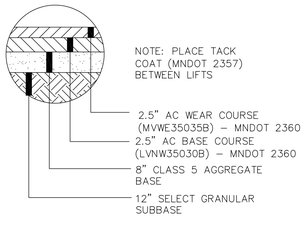

2 BITUMINOUS PAVEMENT-HVY. DUTY

NOT TO SCALE

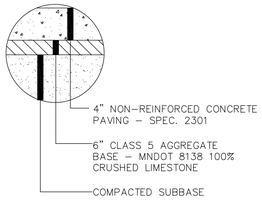

3 CONCRETE PAVING

NOT TO SCALE

0 30 60
SCALE IN FEET

ARCHITECTURAL ALLIANCE
400 Clifton Avenue South
Minneapolis, Minnesota 55403-3299
Telephone (612) 871-5703
Fax (612) 871-7212

Structural Engineer
Meyer Borgman
12 South Sixth Street / Suite 810
Minneapolis, Minnesota 55402
(612) 338-0713

Mechanical, Electrical Engineer
Dunham Associates
50 South Sixth Street / Suite 1100
Minneapolis, Minnesota 55402
(612) 465-7550

Civil Engineers
EVS Inc.
10250 Valley View Road / Suite 12
Eden Prairie, Minnesota 55344
(952) 646-0236

Landscape Architect
Damon Farber Associates
923 Nicollet Mall
Minneapolis, Minnesota 55402
(612) 332-7522

I hereby certify that this plan or drawing was prepared by me or under my direct supervision and that I am a duly licensed Engineer under the laws of the State of Minnesota.

For Architectural Alliance

By

Name Daniel E Bowar

Date 09/25/09 Reg. No. 45018

Issued for	Date
BID DOCUMENTS	09/25/09

Copyright 2009 Architectural Alliance

Comm. No. 2009019

Drawn PF/DB

Checked DEZ

Date 09/25/09

Project

MnDOT / Carver County
Chaska Truck Station

4725 Chaska Boulevard
Chaska, Mn 55318

Paving Plan

c107

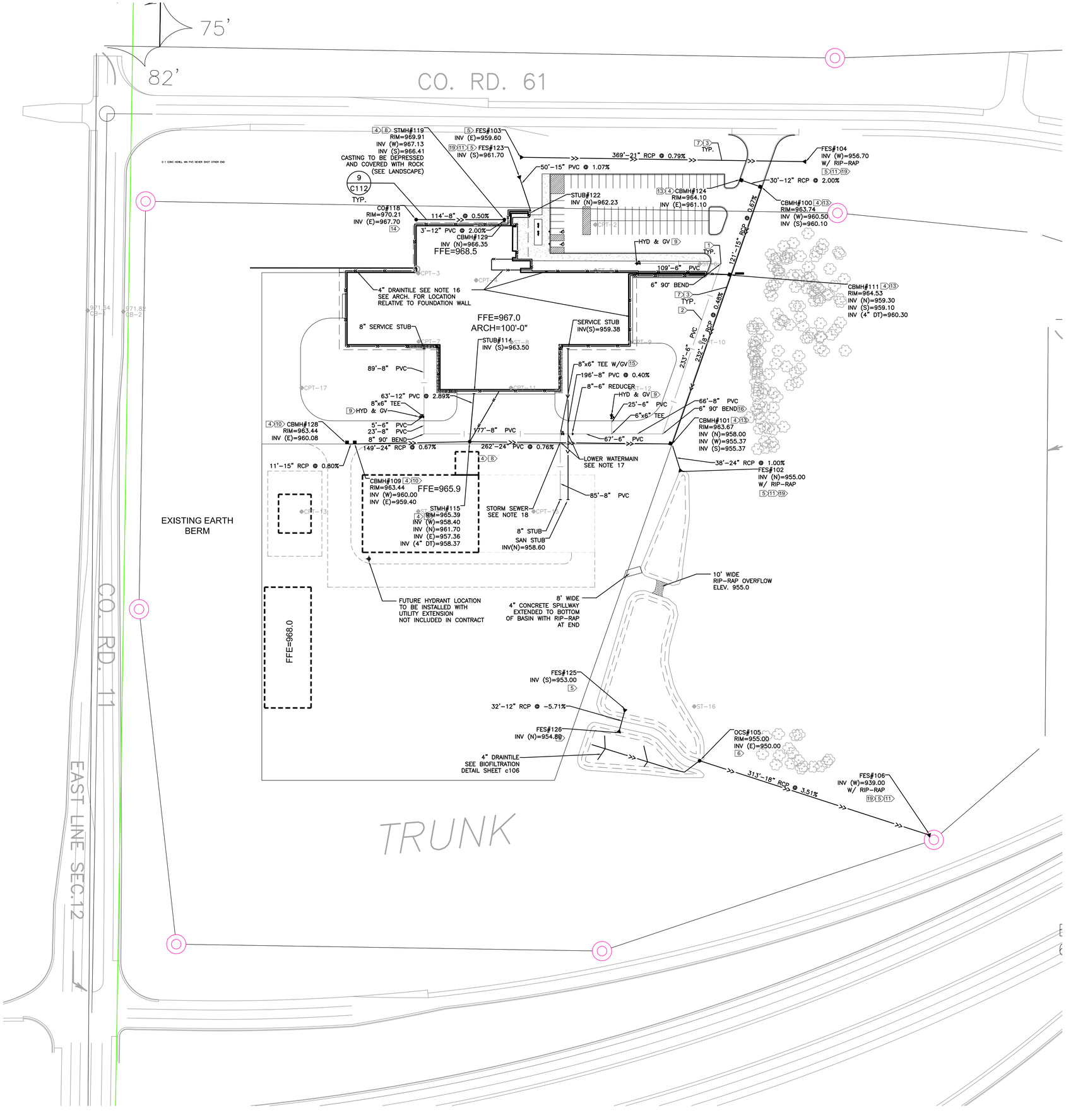

KEY NOTES

1. SEE SHEET C112 DETAIL 1
2. SEE SHEET C112 DETAIL 3
3. SEE SHEET C112 DETAIL 4
4. SEE SHEET C109 DETAIL 1-6
5. SEE SHEET C111 DETAIL 1
6. SEE SHEET C112 DETAIL 6
7. SEE SHEET C110 DETAIL 2-6
8. SEE SHEET C110 DETAIL 1
9. SEE SHEET C111 DETAIL 6
10. SEE SHEET C109 DETAIL 6
11. SEE SHEET C111 DETAIL 2
12. NOT USED
13. SEE SHEET C111 DETAIL 7
14. SEE SHEET C112 DETAIL 11
15. 6" GATE VALVE, SEE SHEET C112 DETAIL 5
16. DRAIN TILE SHALL CONFORM TO "CORRUGATED POLYETHYLENE DRAIN TUBING", MNDOT STANDARD SPECIFICATION SECTION 3278 WITH SLOTTED OPENINGS. DRAIN TUBING SHALL BE FURNISHED IN A GEOTEXTILE SOCK CONFORMING "GEOTEXTILE MNDOT STANDARD SPECIFICATION SECTION 3733, TYPE I (KNIT SOCK).

    SUB-DRAIN BACKFILL AGGREGATE SHALL CONFORM TO MNDOT STANDARD SPECIFICATION SECTION 3149 "GRANULAR MATERIAL", PARAGRAPH 3149.2H "COARSE FILTER AGGREGATE". THE COARSE FILTER AGGREGATE IS TO BE SURROUNDED BY A MINIMUM OF 12 INCHES IN CROSS SECTION THICKNESS OF SELECT GRANULAR BACKFILL AS SPECIFIED IN PARAGRAPH 2.2B OF SECTION 31 00 00 EARTHWORK OF THE SPECIFICATIONS EXCEPT WHEN THE COARSE FILTER AGGREGATE IS PLACED DIRECTLY AGAINST A STRUCTURAL FOOTING WALL OR RETAINING WALL COMPONENT.

    DRAINTILE TO BE SET FLAT OR WITH POSITIVE DRAINAGE WITH NO LOW POINTS TO RETAIN WATER. DRAINTILE SHALL ALSO BE PLACED AROUND THE UNDERGROUND TANK AND CONNECTED TO THE MAIN PERIMETER DRAINTILE. DRAINTILE AROUND THE BUILDING SHALL BE AT AN ARCHITECTURAL ELEVATION OF 96' (959.0) WITH OUTLETS AS INDICATED ON PLAN.
17. LOWER WATERMAIN SEE SHEET c112, DETAIL 2 ADD INSULATION SEE SHEET C112 DETAIL 12 AT STORM SEWER CROSSING VALVES TO BE AT STANDARD OPERATING DEPTH CONTRACTOR SHALL PROVIDE APPROPRIATE BENDS TO ENSURE VALVES CAN BE OPERATED WITH STANDARD VALVE KEY.
18. STORM SEWER SHALL BE AIR PRESSURE TESTED TO A POINT 10' EACH SIDE OF WATERMAIN CROSSING PER MINNESOTA PLUMBING CODE. RECOMMEND CENTERING ONE 20' SEGMENT OF PVC PIPE OVER WATERMAIN.
19. SEE SHEET C111 DETAIL 3

LEGEND

>>	DENOTES PROPOSED STORM SEWER PIPE
●	DENOTES CATCH BASIN MANHOLE
■	DENOTES STORM SEWER MANHOLE
	DENOTES FES / FES WITH RIP RAP
>	DENOTES PROPOSED SANITARY SEWER PIPE
|	DENOTES PROPOSED WATER SERVICE PIPE
●	DENOTES SANITARY MANHOLE

NOTES

1. CONTRACTOR TO COORDINATE THE EXTENSION OF SANITARY SEWER AND WATER SERVICE INSTALLATION WITH OWNER. THE SERVICE EXTENSIONS WILL BE UNDER SEPARATE CONTRACT BUT WILL RUN GENERALLY TO THE SOUTHWEST FROM THE STUBS SHOWN. THE CONTRACTOR MUST COORDINATE GRADING, PAVING, UTILITY CONNECTIONS AND EROSION CONTROL WITH THE OWNER.

ARCHITECTURAL ALLIANCE
400 CLIFTON AVENUE SOUTH
MINNEAPOLIS, MINNESOTA 55403-3299
TELEPHONE (612) 871-5703
FAX (612) 871-7212

Structural Engineer
Meyer Borgman
12 South Sixth Street / Suite 810
Minneapolis, Minnesota 55402
(612) 338-0713

Mechanical, Electrical Engineer
Dunham Associates
50 South Sixth Street / Suite 1100
Minneapolis, Minnesota 55402
(612) 465-7550

Civil Engineers
EVS Inc.
10250 Valley View Road / Suite 12
Eden Prairie, Minnesota 55344
(952) 646-0236

Landscape Architect
Damon Farber Associates
923 Nicollet Mall
Minneapolis, Minnesota 55402
(612) 332-7522

I hereby certify that this plan or drawing was prepared by me or under my direct supervision and that I am a duly licensed Engineer under the laws of the State of Minnesota.

For Architectural Alliance

By

Name Daniel E Bowar

Date 09/25/09 Reg. No. 45018

Issued for	Date
BID DOCUMENTS	09/25/09

Copyright 2009 Architectural Alliance

Comm. No. 2009019

Drawn PF/DB

Checked DEZ

Date 09/25/09

Project

MnDOT / Carver County Chaska Truck Station

4725 Chaska Boulevard
Chaska, Mn 55318

MINNESOTA DEPARTMENT OF TRANSPORTATION

CARVER COUNTY

Utility Plan

0 50 100
SCALE IN FEET

c108

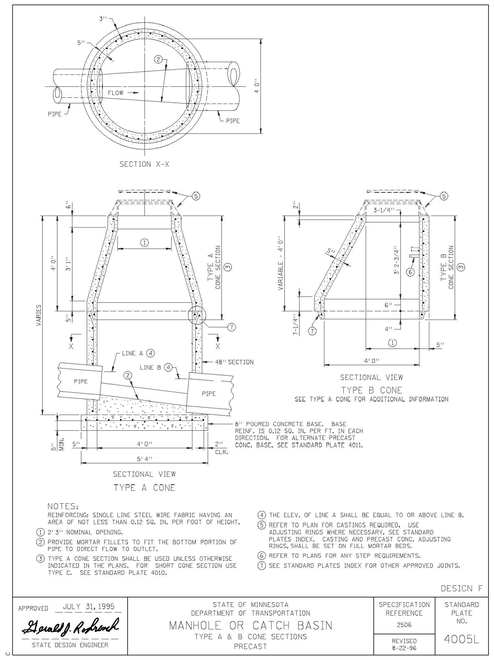

NOTES:
REINFORCING: SINGLE LINE STEEL WIRE FABRIC HAVING AN AREA OF NOT LESS THAN 0.12 SQ. IN. PER FOOT OF HEIGHT.
1. 2'-3" NOMINAL OPENING.
2. PROVIDE MORTAR FILLETS TO FIT THE BOTTOM PORTION OF PIPE TO DIRECT FLOW TO OUTLET.
3. TYPE A CONE SECTION SHALL BE USED UNLESS OTHERWISE INDICATED IN THE PLANS. FOR SHORT CONE SECTION USE TYPE C. SEE STANDARD PLATE 4015.
4. THE ELEV. OF LINE A SHALL BE EQUAL TO OR ABOVE LINE B.
5. REFER TO PLAN FOR CASTINGS REQUIRED. USE ADJUSTING RINGS WHERE NECESSARY, SEE STANDARD PLATES INDEX. CASTING AND PRECAST CONC. ADJUSTING RINGS, SHALL BE SET ON FULL MORTAR BEDS.
6. REFER TO PLANS FOR ANY STEP REQUIREMENTS.
7. SEE STANDARD PLATES INDEX FOR OTHER APPROVED JOINTS.

DESIGN F

APPROVED JULY 31, 1995 STATE DESIGN ENGINEER	STATE OF MINNESOTA DEPARTMENT OF TRANSPORTATION MANHOLE OR CATCH BASIN TYPE A & B CONE SECTIONS PRECAST	SPECIFICATION REFERENCE 2506 REVISED 8-22-96	STANDARD PLATE NO. 4005L

1 CATCHBASIN AND MANHOLE
NOT TO SCALE

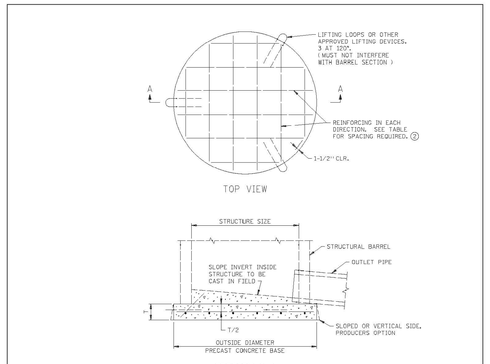

STRUCTURE SIZE (INCHES)	PRECAST CONCRETE BASE OUTSIDE DIAMETER (INCHES)	T (INCHES)	MINIMUM REINF. (2) BAR NUMBER	SPACING (INCHES)	APPROX. WEIGHT (POUNDS)
30	44	6	13	12	790
48	64	6	13	12	1,680
54	72	8	13	12	2,830
60	78	8	13	12	3,320
66	85	8	13	12	3,940
72	92	8	13	12	4,620
78	100	8	13	12	5,460
84	106	8	13	8	6,130
90	114	8	13	8	7,090
96	120	8	13	8	7,850
102	127	8	13	8	8,800
108	132	9	13	8	10,690 (1)
120	146	12	13	8	17,440
132	160	12	13	8	20,940
144	174	12	13	6	24,770

NOTES:
(ALL REBARS ARE IN METRIC DESIGNATIONS)
1. ALTERNATE T = 10" WITH NO. 13 BAR SPACED AT 10".
2. EQUIVALENT WIRE MESH MAY BE USED.

APPROVED OCTOBER 17, 1994 STATE DESIGN ENGINEER	STATE OF MINNESOTA DEPARTMENT OF TRANSPORTATION PRECAST CONCRETE BASE	SPECIFICATION REFERENCE 2506 REVISED 2-10-2000 A.K.J.	STANDARD PLATE NO. 4011E

2 PRECAST BASE
NOT TO SCALE

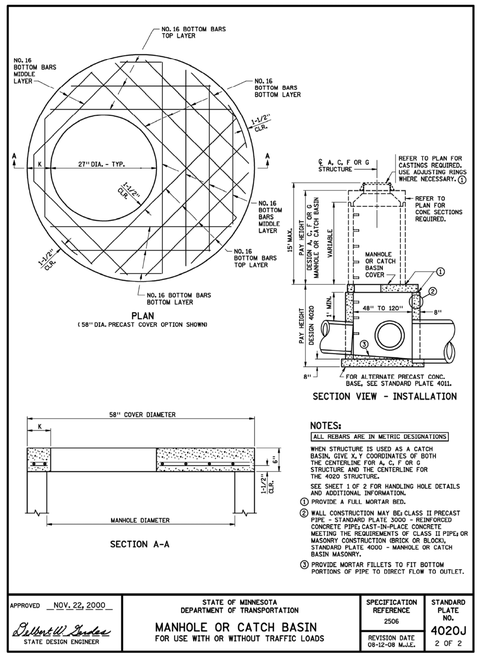

NOTES:
(ALL REBARS ARE IN METRIC DESIGNATIONS)
WHEN STRUCTURE IS USED AS A CATCH BASIN, GIVE X, Y COORDINATES OF BOTH THE CENTERLINE FOR A, C, F OR G STRUCTURE AND THE CENTERLINE FOR THE 4020 STRUCTURE.
SEE SHEET 1 OF 2 FOR HANDLING HOLE DETAILS AND ADDITIONAL INFORMATION.
1. PROVIDE A FULL MORTAR BED.
2. WALL CONSTRUCTION MAY BE: CLASS II PRECAST PIPE - STANDARD PLATE 3000 - REINFORCED CONCRETE PIPE; CAST-IN-PLACE CONCRETE MEETING THE REQUIREMENTS OF CLASS II PIPE; OR MASONRY CONSTRUCTION (BRICK OR BLOCK), STANDARD PLATE 4040 - MANHOLE OR CATCH BASIN MASONRY.
3. PROVIDE MORTAR FILLETS TO FIT BOTTOM PORTIONS OF PIPE TO DIRECT FLOW TO OUTLET.

APPROVED NOV. 22, 2000 STATE DESIGN ENGINEER	STATE OF MINNESOTA DEPARTMENT OF TRANSPORTATION MANHOLE OR CATCH BASIN FOR USE WITH OR WITHOUT TRAFFIC LOADS	SPECIFICATION REFERENCE 2506 REVISION DATE 08-12-08 M.J.L.	STANDARD PLATE NO. 4020J 2 OF 2

3 CATCHBASIN AND MANHOLE
NOT TO SCALE

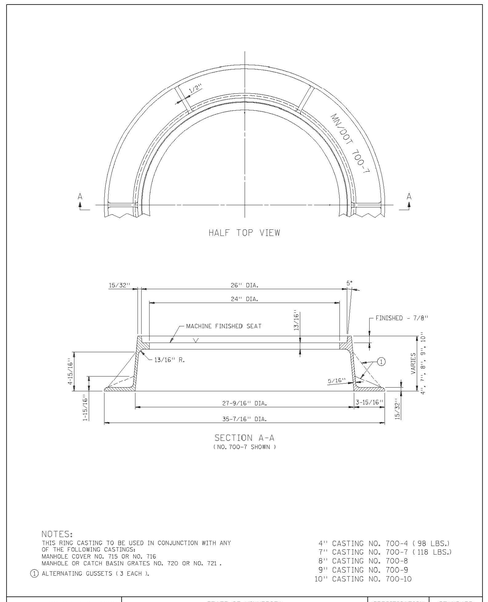

NOTES:
THIS RING CASTING TO BE USED IN CONJUNCTION WITH ANY OF THE FOLLOWING CASTINGS:
MANHOLE COVER NO. 715 OR NO. 716
MANHOLE OR CATCH BASIN GRATES NO. 720 OR NO. 721.
1. ALTERNATING GUSSETS (3 EACH).

4" CASTING NO. 700-4 (98 LBS.)
7" CASTING NO. 700-7 (118 LBS.)
8" CASTING NO. 700-8
9" CASTING NO. 700-9
10" CASTING NO. 700-10

APPROVED OCTOBER 25, 1996 STATE DESIGN ENGINEER	STATE OF MINNESOTA DEPARTMENT OF TRANSPORTATION RING CASTING FOR MANHOLE OR CATCH BASIN	SPECIFICATION REFERENCE 2506	STANDARD PLATE NO. 4101D

4 RING CASTING
NOT TO SCALE

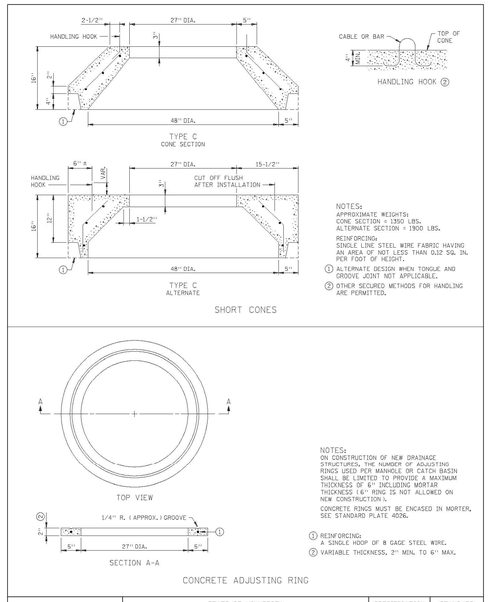

NOTES:
ON CONSTRUCTION OF NEW DRAINAGE STRUCTURES, THE NUMBER OF ADJUSTING RINGS USED PER MANHOLE OR CATCH BASIN SHALL BE LIMITED TO PROVIDE A MAXIMUM THICKNESS OF 6" INCLUDING MORTAR THICKNESS (6" RING IS NOT ALLOWED ON NEW CONSTRUCTION).
CONCRETE RINGS MUST BE ENCASED IN MORTER, SEE STANDARD PLATE 4026.
1. REINFORCING: A SINGLE HOOP OF 8 GAGE STEEL WIRE.
2. VARIABLE THICKNESS, 2" MIN. TO 6" MAX.

APPROVED MARCH 14, 1996 STATE DESIGN ENGINEER	STATE OF MINNESOTA DEPARTMENT OF TRANSPORTATION CONCRETE SHORT CONE AND ADJUSTING RING (SECTIONAL CONCRETE)	SPECIFICATION REFERENCE 2506 REVISED 7-20-98	STANDARD PLATE NO. 4010H

5 CONCRETE ADJUSTING RING
NOT TO SCALE

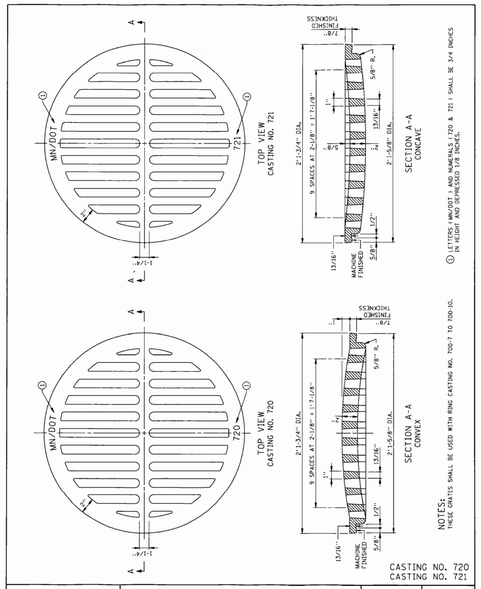

APPROVED Oct. 1, 1966 W. A. Ekern ASSISTANT COMMISSIONER ENGINEERING STANDARDS	STATE OF MINNESOTA DEPARTMENT OF TRANSPORTATION SPECIAL GRATE CASTINGS FOR CATCH BASIN CONVEX AND CONCAVE	SPECIFICATION REFERENCE 2506 REVISED 5-5-99 A.K.J.	STANDARD PLATE NO. 4140D

6 OPEN GRATE CASTING
NOT TO SCALE

ARCHITECTURAL ALLIANCE
400 CLIFTON AVENUE SOUTH
MINNEAPOLIS, MINNESOTA 55403-3299
TELEPHONE (612) 871-5703
FAX (612) 871-7212

Structural Engineer
Meyer Borgman
12 South Sixth Street / Suite 810
Minneapolis, Minnesota 55402
(612) 338-0713

Mechanical, Electrical Engineer
Dunham Associates
50 South Sixth Street / Suite 1100
Minneapolis, Minnesota 55402
(612) 465-7550

Civil Engineers
EVS Inc.
10250 Valley View Road / Suite 12
Eden Praire, Minnesota 55344
(952) 646-0236

Landscape Architect
Damon Farber Associates
923 Nicollet Mall
Minneapolis, Minnesota 55402
(612) 332-7522

I hereby certify that this plan or drawing was prepared by me or under my direct supervision and that I am a duly licensed Engineer under the laws of the State of Minnesota.

For Architectural Alliance

By

Name Daniel E Bowar

Date 09/25/09 Reg. No. 45018

Issued for	Date
BID DOCUMENTS	09/25/09

Copyright 2009 Architectural Alliance

Comm. No. 2009019

Drawn PF/DB

Checked DEZ

Date 09/25/09

Project

MnDOT / Carver County
Chaska Truck Station

4725 Chaska Boulevard
Chaska, Mn 55318

Construction Details

c109

1 MANHOLE COVER-SOLID
NOT TO SCALE

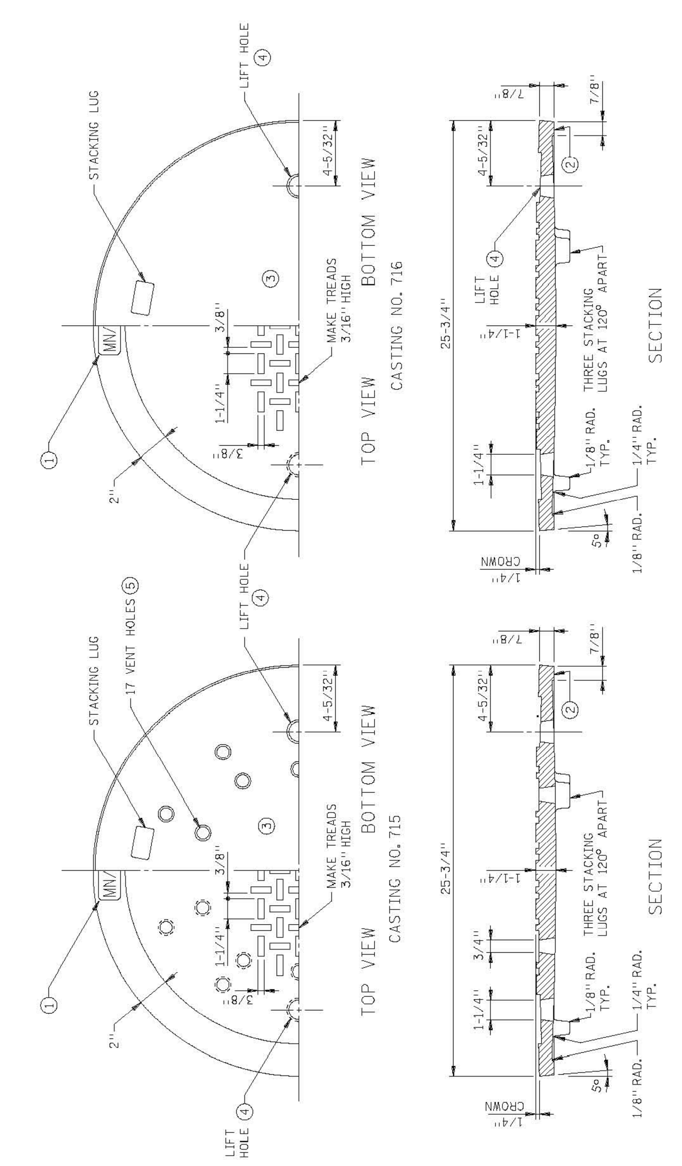

NOTES:
THESE COVERS TO BE USED WITH RING CASTING NO. 700-7 TO 700-10 OR FRAME CASTING NO. 770.

① ON OPPOSITE SIDE OF TOP SURFACE PLACE CASTING NUMBER, LETTERS (MN/DOT) AND NUMERALS TO BE 3/4" IN HEIGHT AND DEPRESSED 1/8".
② MACHINE FINISHED THICKNESS TO BE 13/16".
③ COVER SHALL BE MADE OF GRAY IRON, CLASS 35B.
④ LIFT HOLE 1-1/4" DIA. AT THE TOP, 1-1/2" AT THE BOTTOM.
⑤ EIGHT (8) VENT HOLES IN OUTER CIRCLE. NINE (9) VENT HOLES IN INNER CIRCLE. HOLES ARE 3/4" DIA. AT THE TOP AND 1" DIA. AT THE BOTTOM. INNER CIRCLE IS 2" FROM THE OUTER CIRCLE.

CASTING NO. 715 - 115 LBS.
CASTING NO. 716 - 118 LBS.

APPROVED OCTOBER 25, 1996 — STATE DESIGN ENGINEER
STATE OF MINNESOTA DEPARTMENT OF TRANSPORTATION
COVER CASTING FOR MANHOLE (FOR USE IN ALL TRAFFIC AREAS)
SPECIFICATION REFERENCE 2506 | STANDARD PLATE NO. 4110F

2 REINFORCED CONCRETE PIPE
NOT TO SCALE

INTERNAL DIA. OF PIPE, INCHES	WEIGHT PER LIN. FT. OF PIPE	MIN. WALL THICKNESS	CLASS I		CLASS II		CLASS III		CLASS IV		CLASS V	
			D - LOAD TO PRODUCE A 0.01 INCH CRACK (LBS./LIN. FT./FT. OF DIA.)									
			800		1000		1350		2000		3000	
			D - LOAD TO PRODUCE ULTIMATE LOAD (LBS./LIN. FT./FT. OF DIA.)									
			1200		1500		2000		3000		3750	
			CONCRETE 4000 P.S.I.		CONCRETE 4000 P.S.I.		CONCRETE 4000 P.S.I.		CONCRETE 4000 P.S.I.		CONCRETE 6000 P.S.I.	
		T	MINIMUM REINFORCEMENT SQUARE INCHES PER LINEAR FOOT OF BARREL									
D	POUNDS	INCHES	INNER CAGE	OUTER CAGE	INNER CAGE	OUTER CAGE	INNER CAGE	OUTER CAGE	INNER CAGE	OUTER CAGE	INNER CAGE	OUTER CAGE
12	92	2	—	—	0.07 ②	—	0.07 ②	—	0.07	—	0.10	—
15	127	2-1/4	—	—	0.07 ②	—	0.07 ②	—	0.10	—	0.14	—
18	168	2-1/2	—	—	0.07 ②	—	0.07 ②	—	0.14	—	0.19	—
21	214	2-3/4	—	—	0.07 ②	—	0.07 ②	—	0.20	—	0.24	—
24	265	3	—	—	0.07 ②	—	0.07 ②	—	0.27	—	0.30	—
27	322	3-1/4	—	—	0.13	—	0.16	—	0.31	—	0.38	0.23
30	384	3-1/2	—	—	0.14	—	0.18	—	0.35	—	0.41	0.25
33	452	3-3/4	—	—	0.15	—	0.20	—	0.27	0.16	0.46	0.28
36	524	4 ③	—	—	0.12	0.07	0.17 ③	0.10	0.30	0.18	0.50	0.30
42	685	4-1/2	—	—	0.15	0.09	0.21	0.13	0.35	0.21	0.60	0.36
48	867	5	—	—	0.18	0.11	0.24	0.14	0.42	0.25	0.73	0.44
54	1070	5-1/2	—	—	0.22	0.13	0.29	0.17	0.50	0.30	0.74 ①	0.44
									CONCRETE 5000 PSI			
60	1296	6	0.21	0.13	0.25	0.15	0.34	0.20	0.59	0.35	0.81 ①	0.49
66	1542	6-1/2	0.25	0.15	0.31	0.19	0.41	0.25	0.69	0.41	0.88 ①	0.53
72	1810	7	0.29	0.17	0.35	0.21	0.49	0.29	0.79	0.47	0.95 ①	0.57
78	2098	7-1/2	0.32	0.19	0.40	0.24	0.57	0.34	0.70 ①	0.42	1.03 ①	0.62
84	2410	8	0.37	0.22	0.46	0.28	0.64	0.38	0.75 ①	0.45	1.12 ①	0.67
							CONCRETE 5000 PSI					
90	2740	8-1/2	0.41	0.25	0.51	0.31	0.69	0.41	0.82 ①	0.49	1.20 ①	0.72
96	3090	9	0.46	0.28	0.57	0.34	0.76	0.46	0.88 ①	0.53	1.30 ①	0.78
					CONCRETE 5000 PSI							
102	3470	9-1/2	0.54	0.32	0.68	0.41	0.90	0.54	0.94 ①	0.56	1.42 ①	0.85
108	3860	10	0.61	0.37	0.76	0.46	1.08	0.65	1.00 ①	0.60	1.50 ①	0.90

NOTES:
SEE SHEETS 2 TO 5 FOR ADDITIONAL INFORMATION ON PIPE SECTIONS AND GENERAL NOTES.

STANDARD PLATE 3006, GASKET JOINT R.C. PIPE, MAY BE FURNISHED IN LIEU OF 3000 PIPE. THE GASKET REQUIRED FOR 3006 PIPE WILL NOT BE REQUIRED; HOWEVER, THE APPROPRIATE PROVISIONS OF THE SPECIFICATIONS RELATING TO FILLING THE JOINT SPACE WITH AN APPROVED SEALER OR FULL CIRCUMFERENTIAL WRAP OF GEOTEXTILE MATERIAL SHALL APPLY.

① CLASS IV PIPE 78 INCHES OR MORE IN DIAMETER AND CLASS V PIPE 54 INCHES OR MORE IN DIAMETER ARE SPECIAL DESIGNS AND REQUIRE SHEAR STEEL. FOR SPECIAL DESIGNS SEE SHEET 4 OF 5.
② FOR THESE CLASSES AND SIZES, THE MINUMUM PRACTICAL STEEL REINFORCEMENT IS SPECIFIED. THE ACTUAL ULTIMATE STRENGTH IS GREATER THAN THE MINUMUM STRENGTH SPECIFIED FOR NONREINFORCED PIPE OF EQUIVALENT DIAMETERS IN AASHTO M86.
③ AS AN ALTERNATIVE, SINGLE CAGE REINFORCEMENT MAY BE USED. THE REINFORCEMENT AREA IN SQUARE INCHES PER LINEAR FOOT SHALL BE 0.30 FOR WALL B.

APPROVED Aug. 31, 1989 — Director, Materials, Research and Standards
STATE OF MINNESOTA DEPARTMENT OF TRANSPORTATION
REINFORCED CONCRETE PIPE — B WALL
SPECIFICATION REFERENCE 2501, 2502, 2503 | REVISED 4-30-99 A.K.J. | STANDARD PLATE NO. 3000L 1 OF 5

3 REINFORCED CONCRETE PIPE
NOT TO SCALE

INTERNAL DIA. OF PIPE, (INCHES)	WEIGHT PER LIN. FT. OF PIPE	WALL THICKNESS	CLASS II		CLASS III		CLASS IV		CLASS V	
			D - LOAD TO PRODUCE A 0.01 INCH CRACK (POUNDS PER LIN. FT. PER FT. OF DIA.)							
			1000		1350		2000		3000	
			D - LOAD TO PRODUCE ULTIMATE LOAD (LBS. PER LIN. FT. PER FT. OF DIA.)							
			1500		2000		3000		3750	
			CONCRETE 4000 P.S.I.		CONCRETE 4000 P.S.I.		CONCRETE 4000 P.S.I.		CONCRETE 6000 P.S.I.	
		T	MINIMUM REINFORCEMENT SQUARE INCHES PER LINEAL FOOT OF BARREL ①							
D	LBS.	INCHES	INNER CAGE	OUTER CAGE	INNER CAGE	OUTER CAGE	INNER CAGE	OUTER CAGE	INNER CAGE	OUTER CAGE
12	140	2-3/4	— ②	—	— ②	—	— ②	—	0.08 ⑤	—
15	180	3	— ②	—	— ②	—	— ②	—	0.08 ⑤	—
18	230	3-1/4	— ②	—	— ②	—	— ②	—	0.10 ⑤	—
21	280	3-1/2	— ②	—	— ②	—	— ②	—	0.15 ⑤	—
24	340	3-3/4	— ②	—	—	—	0.07	0.07	0.12	0.07
27	410	4	— ②	—	—	—	0.08	0.07	0.14	0.08
30	480	4-1/4	— ②	—	—	—	0.09	0.07	0.18	0.11
33	510	4-1/2	— ②	—	—	—	0.11	0.07	0.23	0.14
36	630	4-3/4 ③	0.07	0.07	0.08 ③	0.07	0.14	0.08	0.27	0.16
42	810	5-1/4	0.10	0.07	0.12	0.07	0.20	0.12	0.36	0.22
48	1010	5-3/4	0.14	0.08	0.16	0.10	0.26	0.16	0.47	0.28
54	1230	6-1/4	0.17	0.10	0.21	0.13	0.34	0.20	0.58	0.35
60	1470	6-3/4	0.22	0.13	0.25	0.15	0.41	0.25	0.70 ①	0.42
66	1740	7-1/4	0.25	0.15	0.31	0.19	0.51	0.31	0.84 ①	0.50
							CONCRETE 5000 P.S.I.			
72	2010	7-3/4	0.30	0.18	0.36	0.22	0.61	0.37	0.99 ①	0.59
78	2330	8-1/4	0.35	0.21	0.42	0.25	0.71	0.43		
84	2640	8-3/4	0.41	0.25	0.50	0.30	0.85	0.51		
					CONCRETE 5000 P.S.I.					
90	3000	9-1/4	0.48	0.29	0.59	0.35				
96	3370	9-3/4	0.55	0.33	0.70	0.42				
			CONCRETE 5000 P.S.I.							
102	3760	10-1/4	0.62	0.37	0.83	0.50				
108	4170	10-3/4	0.70	0.42	0.99	0.59				

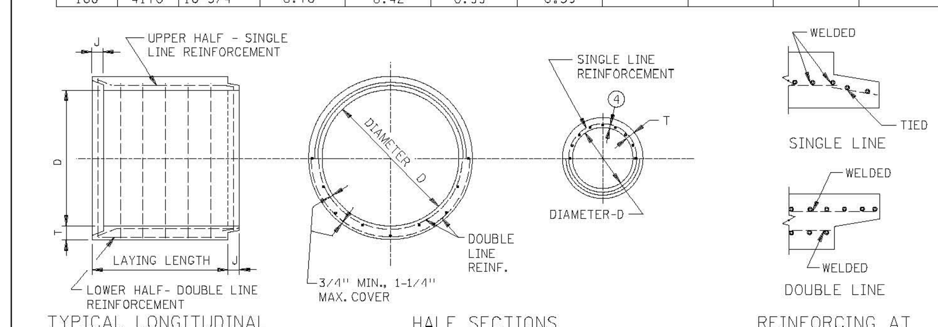

TYPICAL LONGITUDINAL SECTION — HALF SECTIONS — REINFORCING AT ENDS OF PIPE

NOTES:
SEE SHEET 5 OF 5 FOR ADDITIONAL INFORMATION ON C WALL PIPE SECTIONS AND GENERAL NOTES.

STANDARD PLATE 3006, GASKET JOINT R.C. PIPE, MAY BE FURNISHED IN LIEU OF 3000 PIPE. THE GASKET REQUIRED FOR 3006 PIPE WILL NOT BE REQUIRED; HOWEVER, THE APPROPRIATE PROVISIONS OF THE SPECIFICATIONS RELATING TO FILLING THE JOINT SPACE WITH AN APPROVED SEALER OR FULL CIRCUMFERENTIAL WRAP OF GEOTEXTILE MATERIAL SHALL APPLY.

① AN INNER CIRCULAR CAGE PLUS AN ELLIPTICAL CAGE SUCH THAT THE AREA OF THE ELLIPTICAL CAGE SHALL NOT BE LESS THAN THAT SPECIFIED FOR THE OUTER CAGE IN THE TABLE AND THE TOTAL AREA OF THE INNER CIRCULAR CAGE PLUS THE ELLIPTICAL CAGE SHALL NOT BE LESS THAN THAT SPECIFIED FOR THE INNER CAGE IN THE TABLE.
② FOR THESE CLASSES AND SIZES, THE MINUMUM PRACTICAL STEEL REINFORCEMENT IS SPECIFIED. THE ACTUAL ULTIMATE STRENGTH IS GREATER THAN THE MINUMUM STRENGTH SPECIFIED FOR NONREINFORCED PIPE OF EQUIVALENT DIAMETERS IN AASHTO M86.
③ AS AN ALTERNATIVE, FOR CLASS II AND III A SINGLE CAGE REINFORCEMENT MAY BE USED. THE REINFORCEMENT AREA IN SQUARE INCHES PER LINEAR FOOT SHALL BE 0.20 FOR WALL C.
④ 35 TO 50 PERCENT OF T EXCEPT WHEN WALL THICKNESS IS LESS THAN 3-1/2 INCHES-THEN 3/4 INCHES OF COVER.
⑤ SINGLE LINE REINFORCEMENT.

APPROVED Aug. 31, 1989 — Director, Materials, Research and Standards
STATE OF MINNESOTA DEPARTMENT OF TRANSPORTATION
REINFORCED CONCRETE PIPE — C WALL
SPECIFICATION REFERENCE 2501, 2502, 2503 | REVISED 4-30-99 A.K.J. | STANDARD PLATE NO. 3000L 2 OF 5

4 REINFORCED CONCRETE PIPE
NOT TO SCALE

INTERNAL DIAMETER OF PIPE IN INCHES	CROSS SECTION WATER AREA	LENGHT OF JOINT	NOMINAL - A				
		J		D1	D2	D3	D4
D	SQ. FT.	INCHES					
12	0.79	1-3/4	3/16	13-1/4	13-5/8	13-7/8	14-1/4
15	1.23	2	3/16	16-1/2	16-7/8	17-1/4	17-5/8
18	1.77	2-1/4	3/16	19-5/8	20	20-3/8	20-3/4
21	2.40	2-1/2	3/16	22-7/8	23-1/4	23-3/4	24-1/8
24	3.14	2-3/4	3/16	26	26-3/8	27	27-3/8
27	3.98	3	3/16	29-1/4	29-5/8	30-1/4	30-5/8
30	4.91	3-1/4	3/16	32-3/8	32-3/4	33-1/2	33-7/8
33	5.94	3-1/2	1/4	35-1/2	36	36-3/4	37-1/4
36	7.07	3-3/4	1/4	38-3/4	39-1/4	40	40-1/2
42	9.62	4	1/4	45-1/8	45-5/8	46-1/2	47
48	12.57	4-1/4	1/4	51-1/2	52	53	53-1/2
54	15.90	4-1/2	1/4	57-7/8	58-3/8	59-3/8	59-7/8
60	19.63	5	1/4	64-1/4	64-3/4	66	66-1/2
66	23.76	5-1/2	1/4	70-5/8	71-1/8	72-1/2	73
72	28.27	6	1/4	77	77-1/2	79	79-1/2
78	33.18	6-1/2	1/4	83-3/8	83-7/8	85-5/8	86-1/8
84	38.48	7	1/4	89-3/4	90-1/4	92-1/8	92-5/8
90	44.18	7	1/4	95-3/4	96-1/4	98-1/8	98-5/8
96	50.27	7	1/4	102-1/8	102-5/8	104-1/2	105
102	56.75	7-1/2	1/4	109	109-1/2	111-1/2	112
108	63.62	7-1/2	1/4	115-1/2	116	118	118-1/2

TOLERANCES IN DIMENSIONS:

D: ± 1.5% FOR 12" TO 24" D, ± 1% OR 3/8" WHICHEVER IS GREATER FOR 27" TO 108" D.

D1, D2, D3, AND D4: ± 3/16" FOR 12" TO 30" D, ± 1/4" FOR 33" TO 108" D.

T: NOT LESS THAN THE DESIGN T BY MORE THAN 5% OR 3/16" WHICHEVER IS GREATER.

J: ALL SIZES ± 1/4".

LAYING LENGTH: SHALL NOT UNDERRUN BY MORE THAN 1/2".

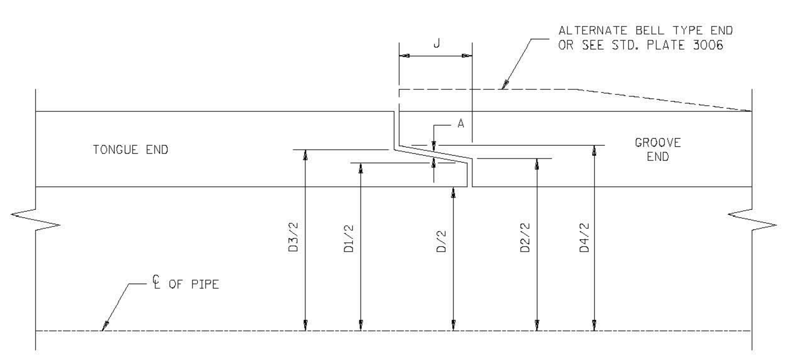

SECTION AT PIPE JOINT

APPROVED Aug. 31, 1989 — Director, Materials, Research and Standards
STATE OF MINNESOTA DEPARTMENT OF TRANSPORTATION
REINFORCED CONCRETE PIPE — JOINT DIMENSIONS FOR B-WALL AND C-WALL
SPECIFICATION REFERENCE 2501 2502 2503 | STANDARD PLATE NO. 3000L 3 OF 5

5 REINFORCED CONCRETE PIPE
NOT TO SCALE

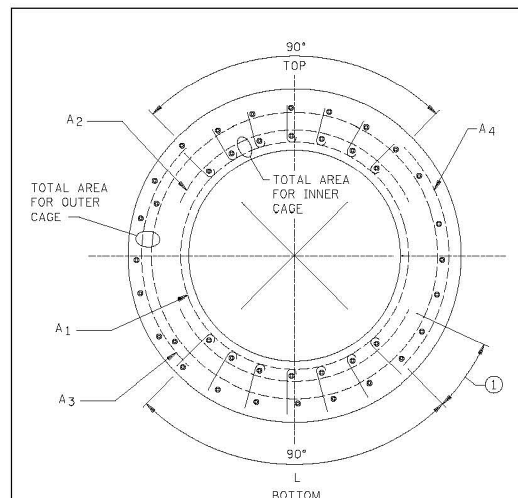

CROSS SECTION FOR SPECIAL DESIGN PIPES

NOTES:
SEE SHEET 1 FOR INNER AND OUTER CAGE REINFORCEMENT.
$A_1 + A_2$ = TOTAL INNER CAGE REINFORCEMENT.
$A_3 + A_4$ = TOTAL OUTER CAGE REINFORCEMENT.
POINT OR INDENT LEGIBLE MARKS AT ONE END OF EACH SECTION ON THE INSIDE AND OUTSIDE OF OPPOSITE WALLS DESIGNATING THE CENTER OF STIRRUP REINFORCEMENT.
THE TOP OF THE PIPE SHALL BE APPROPRIATELY MARKED OR STENCILED BOTH ON THE INSIDE AND OUTSIDE SURFACES.
① THE CAGES MUST BE ASSEMBLED WITH THE OUTER MAT OVERLAPPING THE INNER MAT BY A DISTANCE EQUAL TO ONE PIPE WALL THICKNESS OR GREATER.
A_1 = REINFORCING OF FULL CIRCULAR INNER CAGE.
A_2 = REINFORCING OF INNER LAP SECTION, 90° MINIMUM ARC.
A_3 = REINFORCING OF FULL CIRCULAR OUTER CAGE.
A_4 = REINFORCING OF OUTER LAP SECTION, 90° MINIMUM ARC.
A_r = MINIMUM RADIAL REINFORCING REQUIRED IN SQUARE INCHES PER SQUARE FOOT OF PIPE OVER A MINIMUM 90° ARC AT TOP AND BOTTOM OF PIPE. HOOK DESIGN MUST BE APPROVED BY MATERIALS SECTION.
THE FULL CIRCULAR CAGES MUST HAVE AN AREA EQUAL TO AT LEAST 40% OF THE REQUIRED TOTAL AREA.
L = LENGTH OF 90° ARC MEASURED AT INNER CAGE.
N = MINIMUM NUMBER OF ROWS OF RADIAL REINFORCING AT TOP AND BOTTOM OF PIPE.
S = MAXIMUM CIRCUMFERENTIAL SPACING OF ROWS OR RADIAL REINFORCING AT OUTER CAGE.

INTERNAL DIA. OF PIPE	LENGTH OF 90° ARC	WALL THICKNESS	SHEAR STEEL					
			CLASS IV			CLASS V		
D	L	T	N	S	A_r	N	S	A_r
54"	44"	5-1/2"	—	—	—	12	4"	0.22
60"	49"	6"	—	—	—	10	6"	0.22
66"	54"	6-1/2"	—	—	—	10	6"	0.22
72"	59"	7"	—	—	—	11	6"	0.23
78"	63"	7-1/2"	12	6"	0.25	12	6"	0.25
84"	68"	8"	13	6"	0.28	13	6"	0.28
90"	73"	8-1/2"	13	6"	0.31	13	6"	0.31
96"	77"	9"	14	6"	0.34	14	6"	0.34
102"	82"	9-1/2"	15	6"	0.37	15	6"	0.37
108"	87"	10"	16	6"	0.40	16	6"	0.40

APPROVED Aug. 31, 1989 — Director, Materials, Research and Standards
STATE OF MINNESOTA DEPARTMENT OF TRANSPORTATION
REINFORCED CONCRETE PIPE — REINFORCEMENT INFORMATION SPECIAL DESIGN PIPES
SPECIFICATION REFERENCE 2501 2502 2503 | STANDARD PLATE NO. 3000L 4 OF 5

6 REINFORCED CONCRETE PIPE
NOT TO SCALE

REINFORCEMENT:
REINFORCING STEEL SHALL CONFORM TO THE REQUIREMENTS AASHTO M 170.

IF THE SPLICES ARE NOT WELDED, CIRCUMFERENTIAL REINFORCEMENT SHALL BE LAPPED NOT LESS THAN 20 DIAMETERS FOR DEFORMED BARS AND DEFORMED COLD-WORKED WIRE, AND 40 DIAMETERS FOR PLAIN BARS AND COLD-DRAWN WIRE. IN ADDITION, WHERE LAPPED CAGES OF WELDED-WIRE FABRIC ARE USED WITHOUT WELDING, THE LAP SHALL CONTAIN A LONGITUDINAL WIRE. ALL CIRCULAR AND LONGITUDINAL REINFORCEMENT SHALL BE ASSEMBLED AND SECURELY FASTENED CAGE FASHION SO AS TO MAINTAIN REINFORCEMENT IN EXACT SHAPE AND CORRECT POSITION WITHIN THE FORM.

REINFORCEMENT WILL BE CONSIDERED AS MEETING THE DESIGN REQUIREMENTS IF THE AREA, COMPUTED ON THE BASIS OF NOMINAL AREA OF THE WIRE OR BARS USED, EQUALS OR EXCEEDS THE ABOVE REQUIREMENT. ACTUAL AREA OF THE REINFORCING USED MAY VARY FROM THE NOMINAL AREA ACCORDING TO PERMISSIBLE VARIATIONS OF THE STANDARD SPECIFICATIONS FOR THE REINFORCING.

THE COVER OVER THE CIRCUMFERENTIAL STEEL SHALL BE AS SHOWN ON THIS PLATE BUT IN NO CASE SHALL THE COVER BE LESS THAN 3/4 INCHES AS MEASURED TO THE INSIDE WALL SURFACE OR THE OUTSIDE WALL SURFACE, EXCEPT IN THE TONGUE AND GROOVE. REINFORCING STEEL MAY BE OMITTED FROM EITHER THE TONGUE OR GROOVE ENDS OF 12 INCH THRU 33 INCH DIAMETER PLAIN ROUND PIPE ONLY OF B WALL SINGLE CAGE. BELL ENDS WITH O-RING GASKETS SHALL HAVE REINFORCEMENT IN THEM.

THE SPACING CENTER TO CENTER OF ADJACENT RINGS OF CIRCUMFERENTIAL REINFORCEMENT IN A CAGE SHALL NOT EXCEED 4 INCHES FOR PIPE UP TO AND INCLUDING PIPE HAVING A 4 INCH WALL THICKNESS NOR EXCEED THE WALL THICKNESS FOR LARGER PIPE, AND SHALL IN NO CASE EXCEED 6 INCHES. THE CONTINUITY OF THE CIRCUMFERENTIAL REINFORCING STEEL SHALL NOT BE DESTROYED DURING THE MANUFACTURE OF THE PIPE.

GENERAL NOTES:
THE STRENGTH TEST REQUIREMENTS IN POUNDS-FORCE PER LINEAL FOOT OF PIPE UNDER THE THREE-EDGE-BEARING METHOD SHALL BE COMPUTED BY MULTIPLYING THE INTERNAL DIAMETER OF THE PIPE IN FEET BY THE D-LOADS (EXPRESSED IN POUNDS-FORCE PER LINEAL FOOT OF DIAMETER) TO PRODUCE THE 0.01 INCH CRACK AND THE ULTIMATE LOAD SPECIFIED ON SHEETS 1 AND 5 OF THIS STANDARD PLATE.

PIPES 60 INCHES IN DIAMETER OR GREATER AND ALL CENTER LINE CULVERTS SHALL HAVE TIED JOINTS.

NOT MORE THAN TWO LIFT HOLES WILL BE PERMITTED IN EACH SECTION OF PIPE. TAPERED PLUGS SHALL BE FURNISHED FOR CLOSING LIFT HOLES.

GASKET LUBRICATION SHALL BE AS PER MANUFACTURER'S RECOMMENDATIONS.

LAYING LENGTH:
THE NOMINAL LAYING OF ALL PIPE SHALL NOT BE LESS THAN 6 FEET EXCEPT THAT NOT MORE THAN TWO 4 FOOT LENGTHS OF PIPE WILL BE PERMITTED IN A LINE OF PIPE TO MAKE THE REQUIRED TOTAL LENGTH. FOR ALL DIAMETERS OF PIPE ONE SECTION OF ANY ODD LENGTH GREATER THAN 4 FEET WILL BE PERMITTED IN EACH LINE OR REACH OF PIPE TO MAKE THE REQUIRED TOTAL LENGTH. PIPE SECTIONS SHORTER THAN THE NOMINAL LAYING LENGTH SHALL BE INSTALLED NEAR THE MIDDLE OF THE LINE OR AS DIRECTED BY THE ENGINEER.

BASIS FOR DESIGN: AASHTO M170

APPROVED Aug. 31, 1989 — Director, Materials, Research and Standards
STATE OF MINNESOTA DEPARTMENT OF TRANSPORTATION
REINFORCED CONCRETE PIPE — GENERAL NOTES
SPECIFICATION REFERENCE 2501 2502 2503 | STANDARD PLATE NO. 3000L 5 OF 5

ARCHITECTURAL ALLIANCE
400 CLIFTON AVENUE SOUTH
MINNEAPOLIS, MINNESOTA 55403-3299
TELEPHONE (612) 871-5703
FAX (612) 871-7212

Structural Engineer
Meyer Borgman
12 South Sixth Street / Suite 810
Minneapolis, Minnesota 55402
(612) 338-0713

Mechanical, Electrical Engineer
Dunham Associates
50 South Sixth Street / Suite 1100
Minneapolis, Minnesota 55402
(612) 465-7550

Civil Engineers
EVS Inc.
10250 Valley View Road / Suite 12
Eden Prairie, Minnesota 55344
(952) 646-0236

Landscape Architect
Damon Farber Associates
923 Nicollet Mall
Minneapolis, Minnesota 55402
(612) 332-7522

I hereby certify that this plan or drawing was prepared by me or under my direct supervision and that I am a duly licensed Engineer under the laws of the State of Minnesota.
For Architectural Alliance
By
Name Daniel E Bowar
Date 09/25/09 Reg. No. 45018

Issued for	Date
BID DOCUMENTS	09/25/09

Copyright 2009 Architectural Alliance

Comm. No. 2009019
Drawn PF/DB
Checked DEZ
Date 09/25/09

Project
MnDOT / Carver County
Chaska Truck Station
4725 Chaska Boulevard
Chaska, Mn 55318

Construction Details

c110

ARCHITECTURAL ALLIANCE

400 CLIFTON AVENUE SOUTH
MINNEAPOLIS, MINNESOTA 55403-3299
TELEPHONE (612) 871-5703
FAX (612) 871-7212

Structural Engineer
Meyer Borgman
12 South Sixth Street / Suite 810
Minneapolis, Minnesota 55402
(612) 338-0713

Mechanical, Electrical Engineer
Dunham Associates
50 South Sixth Street / Suite 1100
Minneapolis, Minnesota 55402
(612) 465-7550

Civil Engineers
EVS Inc.
10250 Valley View Road / Suite 12
Eden Praire, Minnesota 55344
(952) 646-0236

Landscape Architect
Damon Farber Associates
923 Nicollet Mall
Minneapolis, Minnesota 55402
(612) 332-7522

I hereby certify that this plan or drawing was prepared by me or under my direct supervision and that I am a duly licensed Engineer under the laws of the State of Minnesota.

For Architectural Alliance

By

Name Daniel E Bowar

Date 09/25/09 Reg. No. 45018

Issued for	Date
BID DOCUMENTS	09/25/09

Copyright 2009 Architectural Alliance

Comm. No. 2009019

Drawn PF/DB

Checked DEZ

Date 09/25/09

Project

MnDOT / Carver County
Chaska Truck Station

4725 Chaska Boulevard
Chaska, Mn 55318

Construction Details

c111

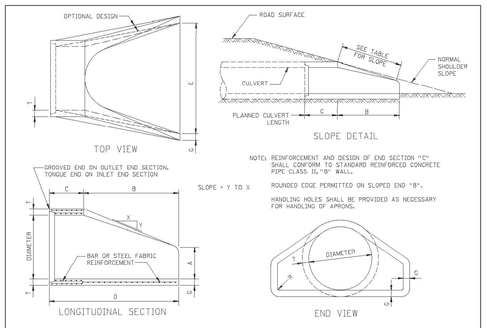

NOTE: REINFORCEMENT AND DESIGN OF END SECTION "C" SHALL CONFORM TO STANDARD REINFORCED CONCRETE PIPE CLASS III, "B" WALL.

ROUNDED EDGE PERMITTED ON SLOPED END "B".

HANDLING HOLES SHALL BE PROVIDED AS NECESSARY FOR HANDLING OF APRONS.

SEE STD PLATE 3000 FOR ADDITIONAL REQUIREMENTS

DIAM.	WEIGHT PER SECTION (LBS.)	APPROX. SLOPE Y TO X	T	A	B	C	D	E	G	R	S
12"	630	1 TO 2.4	2"	4"	24"	18-7/8"	72-7/8"	24"	2"	1-1/2"	0.07
15"	740	1 TO 2.4	2-1/4"	6"	27"	46"	73"	30"	2-1/4"	1-1/2"	0.07
18"	990	1 TO 2.3	2-1/2"	9"	27"	46"	73"	36"	2-1/2"	1-1/2"	0.07
21"	1280	1 TO 2.4	2-3/4"	9"	36"	57-1/2"	73-1/2"	42"	2-3/4"	1-1/2"	0.07
24"	1570	1 TO 2.5	3"	9-1/2"	45-1/2"	50"	73-1/2"	48"	3"	1-1/2"	0.07
27"	1930	1 TO 2.5	3-1/4"	10-1/2"	49-1/2"	24"	73-1/2"	54"	3-1/4"	1-1/2"	0.13
30"	2190	1 TO 2.5	3-1/2"	12"	54"	19-3/4"	73-3/4"	60"	3-1/2"	1-1/2"	0.14
36"	4100	1 TO 2.5	4"	15"	63"	34-3/4"	97-3/4"	72"	4"	1-1/2"	0.12
42"	5380	1 TO 2.5	4-1/2"	21"	63"	35"	98"	78"	4-1/2"	1-1/2"	0.15
48"	6550	1 TO 2.5	5"	24"	72"	26"	98"	84"	5"	1-1/2"	0.18
54"	8240	1 TO 2.0	5-1/2"	27"	65"	33-1/4"	98-1/4"	90"	5-1/2"	1-1/2"	0.22
60"	8730	1 TO 1.9	6"	30"	60"	39"	99"	96"	5"	1-1/2"	0.25
66"	10710	1 TO 1.7	6-1/2"	30"	72"	27"	99"	102"	5-1/2"	1-1/2"	0.31
72"	12520	1 TO 1.6	7"	36"	78"	21"	99"	108"	6"	1-1/2"	0.35
78"	14770	1 TO 1.6	7-1/2"	36"	90"	21"	111"	114"	6-1/2"	1-1/2"	0.40
84"	18160	1 TO 1.6	8"	36"	90-1/2"	21"	111-1/2"	120"	6-1/2"	1-1/2"	0.46
90"	20990	1 TO 1.5	8-1/2"	41"	87-1/2"	24"	111-1/2"	132"	6-1/2"	6"	0.51

S CONTINUOUS BASIC REINFORCEMENT IN SQ. IN. PER LINEAL FT. FOR SLOPED END "B" (LARGER OF INNER OR OUTER CAGE ON STD. PLATE 3000 X. FOR WALL THICKNESSES LESS THAN 4", LOCATE REINFORCEMENT AT THE CENTER OF WALL. FOR WALL THICKNESSES 4" AND GREATER, LOCATE REINFORCEMENT WITH A MIN. OF 2" OF COVER MEASURED FROM THE OUTSIDE OF THE WALL.

NOTE: UNLESS SPECIFIED OTHERWISE IN THE PLANS, WHEN AN APRON IS REQUIRED FOR A RUN OF GASKET PIPE (STD. PLATE 3006), THE PRODUCER MAY FURNISH EITHER:
1. AN APRON WITH A STD. PLATE 3006 JOINT, OR
2. AN APRON WITH A STD. PLATE 3000 JOINT AND THE END OF THE STD. PLATE 3006 PIPE CONNECTING TO THE APRON PROVIDED WITH A STD. PLATE 3000 JOINT. THIS JOINT IS TO BE SEALED WITH A PREFORMED MASTIC SEALER.

APPROVED May 8, 1985
R.H. Sullivan
Assistant Division Director Technical Services

STATE OF MINNESOTA
DEPARTMENT OF TRANSPORTATION
CONCRETE APRON FOR REINFORCED CONCRETE PIPE

SPECIFICATION REFERENCE 2501, 2503
REVISED 10-16-2000 A.K.J.

STANDARD PLATE NO. 3100G

1 FLARED END SECTION
NOT TO SCALE

TABLE OF QUANTITIES
RIPRAP AT RCP OUTLETS

TOTAL OF RIPRAP PIPE (FT.)	L	CLASS II d_{50} = 6" 12" DEPTH GRANULAR FILTER (CU.YDS.)	L	CLASS III d_{50} = 9" 18" DEPTH GRANULAR FILTER (CU.YDS.)	L	CLASS IV d_{50} = 12" 24" DEPTH GRANULAR FILTER (CU.YDS.)
12	14	2.8	14	4.4	14	5.5
15	16	3.9	16	5.5	16	7.0
18	21	5.0	21	7.2	21	9.2
21	20	6.2	20	7.9	20	10.2
24	22	7.5	22	9.5	22	12.2
30	28	10.2	28	13.8	28	17.7
36	34	13.8	34	19.4	34	25.8
48	50	24.0	50	32.5	50	42.9

TABLE OF QUANTITIES
RIPRAP AT RCP-A OUTLETS
OR RIPRAP AT EQUIVALENT CHANNEL WIDTH

SPAN OF CULVERT ARCH (IN.)	L	CLASS II d_{50} = 6" 12" DEPTH GRANULAR FILTER (CU.YDS.)	L	CLASS III d_{50} = 9" 18" DEPTH GRANULAR FILTER (CU.YDS.)	L	CLASS IV d_{50} = 12" 24" DEPTH GRANULAR FILTER (CU.YDS.)
36	32	2.8	32	4.1	32	5.3
42	38	3.8	38	5.4	38	7.2
43	39	4.0	39	5.7	39	7.5
48	44	4.6	44	6.9	44	9.2
58	54	6.4	54	9.5	54	12.7

NOTES:
PIPE SIZES LARGER THAN THOSE SHOWN REQUIRE A SPECIAL DESIGN.
RIPRAP GRADATIONS, DEPTHS OF GRANULAR FILTER THICKNESS AND FILTER BLANKET WILL BE DESIGNATED IN THE PLANS.

1 FOR PIPES GREATER THAN OR EQUAL TO 30", USE L=.
2 IF SLOPE IS FLATTER THAN 1 TO 3, RIPRAP MAY BE INSTALLED ON FILTER FABRIC SPEC. 3733. FOR THE GRANULAR FILTER BLANKET UNLESS OTHERWISE SPECIFIED IN THE PLANS, THE QUANTITY OF FILTER MATERIAL IS THE AREA OF THE RIPRAP AND EXTEND UNDER THE CULVERT APRON 3 FT.
3 DIMENSION E IS GIVEN ON STANDARD PLATES 3100 AND 3101.

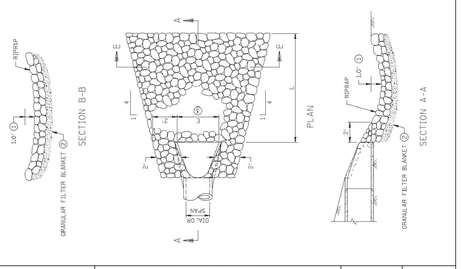

APPROVED MARCH 17, 1997
STATE DESIGN ENGINEER

STATE OF MINNESOTA
DEPARTMENT OF TRANSPORTATION
RIPRAP AT RCP OUTLETS

SPECIFICATION REFERENCE 3601 3733
REVISED 3-25-2000 A.K.J.

STANDARD PLATE NO. 3133C

2 RIP RAP
NOT TO SCALE

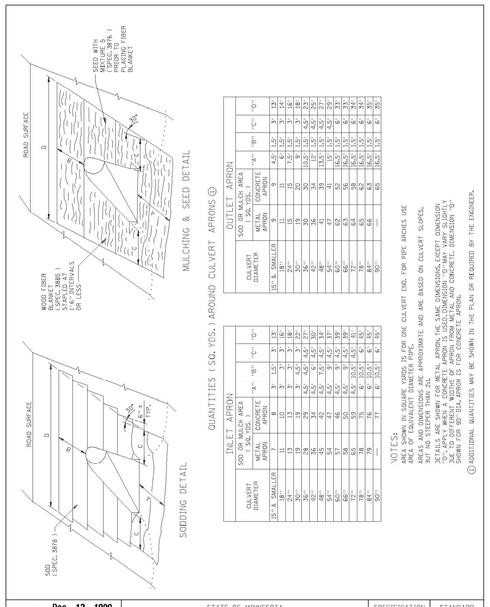

QUANTITIES (SQ. YDS.) AROUND CULVERT APRONS 1

OUTLET APRON

CULVERT DIAMETER	SOD OR MULCH AREA METAL APRON	CONCRETE APRON	"A"	"B"	"C"	"D"
15" & SMALLER	4.5	1.5	3	1	3	13
18"	11	3	3	1.5	3	19
24"	15	5	3	3	3	26
30"	20	10	3	3	3	35
36"	19	20	3.5	3.5	3.5	42
42"	26	26	4	4	4	50
48"	34	32	4.5	4.5	4.5	57
54"	41	41	5	5	5	64
60"	47	47	5.5	5.5	5.5	71
66"	57	54	6	6	6	78
72"	66	62	6.5	6.5	6.5	85
78"	75	71	7	7	7	92
84"	85	80	7.5	7.5	7.5	99
90"	95	90	8	8	8	106
96"	106	101	8.5	8.5	8.5	113
102"	117	112	9	9	9	120
108"	129	124	9.5	9.5	9.5	127
114"	141	136	10	10	10	134
120"	154	149	10.5	10.5	10.5	141
132"	180	175	11.5	11.5	11.5	155
144"	208	203	12.5	12.5	12.5	169

INLET APRON

CULVERT DIAMETER	SOD OR MULCH AREA METAL APRON	CONCRETE APRON	"A"	"B"	"C"	"D"
15" & SMALLER	4	1	3	1.5	3	13
18"	7	2	3	3	3	16
24"	13	4	3	3	3	20
30"	19	8	3	4.5	3	22
36"	26	13	3.5	5.5	3.5	25
42"	34	19	4	6.5	4	27
48"	43	26	4.5	7.5	4.5	30
54"	52	34	5	8.5	5	32
60"	62	43	5.5	9.5	5.5	35
66"	73	52	6	10.5	6	37
72"	84	62	6.5	11.5	6.5	40
78"	96	73	7	12.5	7	42
84"	109	84	7.5	13.5	7.5	45
90"	122	96	8	14.5	8	47
96"	136	108	8.5	15.5	8.5	50
102"	150	121	9	16.5	9	52
108"	165	134	9.5	17.5	9.5	55
114"	180	148	10	18.5	10	57
120"	196	162	10.5	19.5	10.5	60
132"	229	191	11.5	21.5	11.5	65
144"	264	222	12.5	23.5	12.5	70

NOTES:
1 ROUND TO EQUAL SQRDS IS FOR ONE CULVERT END. FOR PIPE ARCHES USE AREA OF EQUIVALENT DIAMETER PIPE.
2 AREAS AND DIMENSIONS ARE APPROXIMATE AND ARE BASED ON CULVERT SLOPES. 3 TO 1 OR FLATTER.
3 DETAILS ARE SHOWN FOR METAL APRON. THE SAME DIMENSIONS, EXCEPT DIMENSION "D", ARE USED FOR CONCRETE APRON. DIMENSION "D" IS 2 FT. LONGER FOR CONCRETE DUE TO DIFFERENT WIDTHS OF APRON FROM METAL AND CONCRETE. DIMENSION "D" SHOULD BE ADJUSTED TO FIT FIELD CONDITIONS.
4 ADDITIONAL QUANTITIES MAY BE SHOWN IN THE PLAN OR REQUIRED BY THE ENGINEER.

APPROVED Dec. 12, 1990
R.M. Hill
DIRECTOR
OFFICE OF TECHNICAL SUPPORT

STATE OF MINNESOTA
DEPARTMENT OF TRANSPORTATION
TURF ESTABLISHMENT AREAS
(AT PIPE CULVERT ENDS)

SPECIFICATION REFERENCE 2575

STANDARD PLATE NO. 9102D

3 TURF AT PIPE OUTLET
NOT TO SCALE

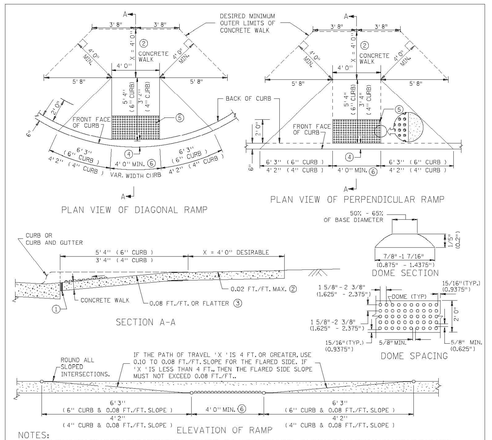

NOTES:
TO COMPLY WITH THE AMERICANS WITH DISABILITIES ACT (ADA), ALL STATE AND LOCAL AGENCIES ARE REQUIRED TO COMPLY WITH THIS STANDARD PLATE.
THE CURB AND CURB TRANSITION ON THE RAMP WILL BE PAID FOR AS LINEAR FEET OF CONCRETE CURB OR CONCRETE CURB AND GUTTER. THE RAMP AREA WILL BE PAID FOR AS CONCRETE WALK EXCLUDING THE TRUNCATED DOME AREA WHICH WILL BE PAID FOR AS TRUNCATED DOMES BY THE SQUARE FOOT. BIKE TRAILS SHALL HAVE TRUNCATED DOMES ACROSS THE ENTIRE WIDTH OF TRAIL WHEN THE TRAIL CROSSES A ROAD. DOMES ARE NOT TO BE USED ON SIDEWALKS OR TRAILS WHEN CROSSING ALLEYS OR DRIVEWAYS.

1 1/2 INCH PREFORMED JOINT FILLER MATERIAL, AASHTO M 213.

2 WHEN POSSIBLE, PROVIDE A CLEAR PATH OF TRAVEL, 4'-0" WIDE BEHIND THE PEDESTRIAN RAMP. A RELATIVELY FLAT 4' X 4' LANDING WILL ALLOW WHEELCHAIRS TO NAVIGATE AROUND THE PEDESTRIAN RAMP. NO SIGNALS, SIGNS, CABINETS, OR OTHER OBSTRUCTIONS ARE ALLOWED IN THE RAMP OR PATH OF TRAVEL.

3 WHEN A MEDIAN IS NOT WIDE ENOUGH FOR TWO PEDESTRIAN RAMPS AND A 48" LANDING BETWEEN THEM, THE PEDESTRIAN CROSSING SHALL BE CUT THROUGH THE MEDIAN AT STREET LEVEL.

4 PLACE THE DETECTABLE WARNINGS (TRUNCATED DOMES) AT THE BACK OF CURB. WHEN THE DETECTABLE WARNING SYSTEM IS A PRECAST MATERIAL, THE CURB SHALL BE HAND FORMED TO FILL THE GAP.

5 ADA REQUIRED TRUNCATED DOME AREA SHALL BE 24" (MIN.) IN DIRECTION OF TRAVEL AND SHALL EXTEND THE FULL WIDTH (3'-0" OR 4'-0" TYP.) OF THE CURB RAMP. THIS 2'-0" BY 3'-0" OR 4'-0" WIDTH (TYP.) TRUNCATED DOME AREA SHALL CONTRAST VISUALLY WITH THE ADJACENT WALKING SURFACE. THE ENTIRE TRUNCATED DOME AREA SHALL BE A LIGHT (GRAY OR BUFF TYPICALLY) COLOR WHEN THE ADJACENT SIDEWALK IS A DARK COLOR. THE ENTIRE TRUNCATED DOME AREA SHALL BE A DARK COLOR (RED OR DARK GRAY TYPICALLY) WHEN THE ADJACENT SIDEWALK IS A LIGHT GRAY CEMENT COLOR.

6 4'-0" MIN. FOR NEW CONSTRUCTION. 3'-0" ALLOWED TO STAY IN PLACE FOR RETROFIT PROJECTS. IN SITUATIONS WHERE THE CURB CUT WIDTH EXCEEDS 4'0", THE DETECTABLE WARNINGS SHALL EXTEND THE FULL WIDTH.

APPROVED FEB. 20, 2004
STATE DESIGN ENGINEER

STATE OF MINNESOTA
DEPARTMENT OF TRANSPORTATION
PEDESTRIAN CURB RAMP
FOR THE HANDICAPPED

SPECIFICATION REFERENCE 2521 2531
REVISION DATE 4-14-2004

STANDARD PLATE NO. 7036F 1 OF 2

4 PEDESTRIAN RAMP
NOT TO SCALE

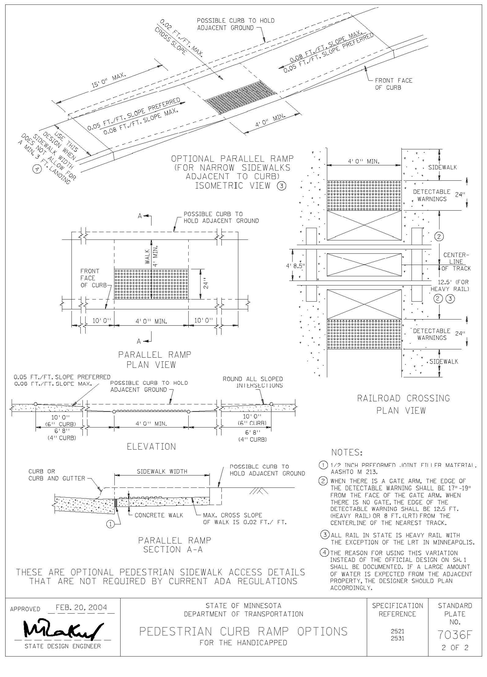

NOTES:
1 1/2 INCH PREFORMED JOINT FILLER MATERIAL, AASHTO M 213.
2 WHEN THERE IS A GATE ARM, THE EDGE OF THE DETECTABLE WARNING SHALL BE 17"-19" FROM THE FACE OF THE GATE ARM. WHEN THERE IS NO GATE, THE EDGE OF THE DETECTABLE WARNING SHALL BE 12.5 FT. HEAVY RAIL (OR 8 FT. LIGHT) FROM THE CENTERLINE OF THE NEAREST TRACK.
3 ALL RAIL IN STATE IS HEAVY RAIL WITH THE EXCEPTION OF THE LRT IN MINNEAPOLIS.
4 THE REASON FOR USING THIS VARIATION INSTEAD OF THE OFFICIAL DESIGN ON SAL 1 SHALL BE DOCUMENTED. IF A LARGE AMOUNT OF WATER IS EXPECTED FROM THE ADJACENT PROPERTY, THE DESIGNER SHOULD PLAN ACCORDINGLY.

APPROVED FEB. 20, 2004
STATE DESIGN ENGINEER

STATE OF MINNESOTA
DEPARTMENT OF TRANSPORTATION
PEDESTRIAN CURB RAMP OPTIONS
FOR THE HANDICAPPED

SPECIFICATION REFERENCE 2521 2531

STANDARD PLATE NO. 7036F 2 OF 2

5 PEDESTRIAN RAMP
NOT TO SCALE

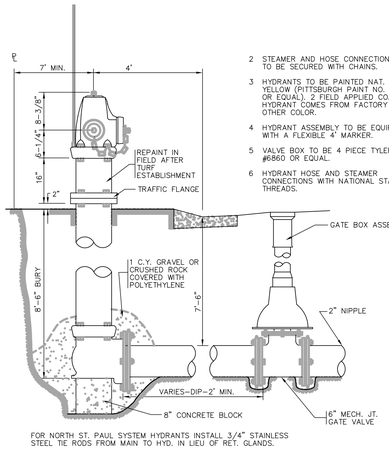

2 STEAMER AND HOSE CONNECTION CAPS TO BE SECURED WITH CHAINS.

3 HYDRANTS TO BE PAINTED NAT. SAFETY YELLOW (PITTSBURGH PAINT NO. 6-302N OR EQUAL). 2 FIELD APPLIED COATS IF HYDRANT COMES FROM FACTORY WITH OTHER COLOR.

4 HYDRANT ASSEMBLY TO BE EQUIPPED WITH A FLEXIBLE 4" MARKER.

5 VALVE BOX TO BE 4 PIECE TYLER SERIES #6860 OR EQUAL.

6 HYDRANT HOSE AND STEAMER CONNECTIONS WITH NATIONAL STANDARD THREADS.

FOR NORTH ST. PAUL SYSTEM HYDRANTS INSTALL 3/4" STAINLESS STEEL TIE RODS FROM MAIN TO HYD. IN LIEU OF RET. GLANDS.

6 HYDRANT AND GATE VALVE
NOT TO SCALE

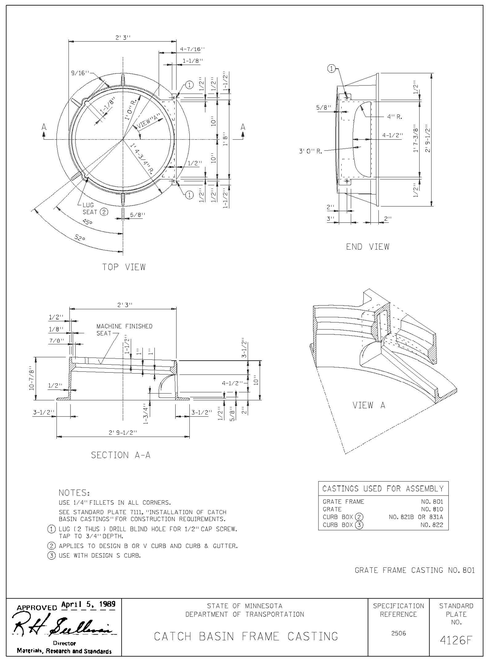

NOTES:
USE 1/4" FILLETS IN ALL CORNERS.
SEE STANDARD PLATE 7111, "INSTALLATION OF CATCH BASIN CASTINGS" FOR CONSTRUCTION REQUIREMENTS.
1 LUG (2 THAS) DRILL BLIND HOLE FOR 1/2" CAP SCREW. TAP TO 3/4" DEPTH.
2 APPLIES TO DESIGN B OR V CURB AND CURB & GUTTER.
3 USE WITH DESIGN S CURB.

CASTINGS USED FOR ASSEMBLY	
GRATE FRAME	NO. 801
GRATE	NO. 812
CURB BOX 2	NO. 821B OR 831A
CURB BOX 3	NO. 822

GRATE FRAME CASTING NO. 801

APPROVED April 5, 1989
Director
Materials, Research and Standards

STATE OF MINNESOTA
DEPARTMENT OF TRANSPORTATION
CATCH BASIN FRAME CASTING

SPECIFICATION REFERENCE 2506

STANDARD PLATE NO. 4126F

7 CATCH BASIN CURB OPENING
NOT TO SCALE

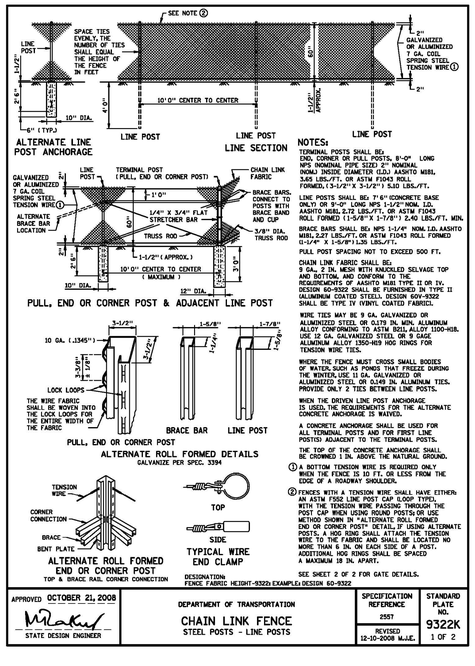

NOTES:
TERMINAL POSTS SHALL BE: END, CORNER OR PULL POSTS, 8'-0" LONG NPS (NOMINAL PIPE SIZE) 2" NOMINAL (NOM.) INSIDE DIAMETER (I.D.) AASHTO M181, 3.65 LBS./FT. OR ASTM F1043 ROLL FORMED, (3-1/2" X 3-1/2") 5.10 LBS./FT.

LINE POSTS SHALL BE: 7'-6" CONCRETE BASE ONLY; OR 9'-0" LONG NPS 1-1/2" NOM. I.D. AASHTO M181, 2.72 LBS./FT. OR ASTM F1043 ROLL FORMED (1-5/8" X 1-7/8") 2.40 LBS./FT. MIN.

BRACE BARS SHALL BE: NPS 1-1/4" NOM. I.D. AASHTO M181, 2.27 LBS./FT. OR ASTM F1043 ROLL FORMED (1-1/4" X 1-5/8") 1.35 LBS./FT.

PULL POST SPACING NOT TO EXCEED 500 FT.

CHAIN LINK FABRIC SHALL BE: 9 GA. 2 IN. MESH WITH KNUCKLED SELVAGE TOP AND BOTTOM, AND CONFORM TO THE REQUIREMENTS OF AASHTO M181 TYPE II OR IV. DESIGN 60-9322 SHALL BE FURNISHED IN TYPE II (ALUMINUM COATED STEEL). DESIGN 60V-9322 SHALL BE TYPE IV (VINYL COATED FABRIC).

WIRE TIES MAY BE: 9 GA. GALVANIZED OR ALUMINIZED STEEL OR 0.179 IN. MIN. ALUMINUM ALLOY CONFORMING TO ASTM B211, ALLOY 1100-H18. USE 12 GA. GALVANIZED STEEL OR 9 GAGE ALUMINUM ALLOY 1350-H19 HOG RINGS FOR TENSION WIRE TIES.

WHERE THE FENCE MUST CROSS SMALL BODIES OF WATER, SUCH AS PONDS THAT FREEZE DURING THE WINTER, USE 11 GA. GALVANIZED OR ALUMINIZED STEEL OR 0.149 IN. ALUMINUM TIES. PROVIDE ONLY 2 TIES BETWEEN LINE POSTS.

WHEN THE DRIVEN LINE POST ANCHORAGE IS USED, THE REQUIREMENTS FOR THE ALTERNATE CONCRETE ANCHORAGE IS WAIVED.

A CONCRETE ANCHORAGE SHALL BE USED FOR ALL TERMINAL POSTS AND FOR FIRST LINE POST(S) ADJACENT TO THE TERMINAL POSTS.

THE TOP OF THE CONCRETE ANCHORAGE SHALL BE CROWNED 1 IN. ABOVE THE NATURAL GROUND.

1 A BOTTOM TENSION WIRE IS REQUIRED ONLY WHEN THE FENCE IS 10 FT. OR LESS FROM THE EDGE OF A ROADWAY SHOULDER.

2 FENCES WITH A TENSION WIRE SHALL HAVE EITHER: ASTM F626 TYPE I POST CAP (LOOP TYPE), WITH A THE TENSION WIRE PASSING THROUGH THE POST CAP WHEN USING ROUND POSTS; OR USE METHOD SHOWN IN "ALTERNATE ROLL FORMED END OR CORNER POST" DETAIL. IF USING ALTERNATE POSTS, A HOG RING SHALL ATTACH THE TENSION WIRE TO THE FABRIC AND SHALL BE LOCATED NO MORE THAN 6 IN. ON EACH SIDE OF A POST. ADDITIONAL HOG RINGS SHALL BE SPACED A MAXIMUM 18 IN. APART.

SEE SHEET 2 OF 2 FOR GATE DETAILS.

APPROVED OCTOBER 21, 2008
STATE DESIGN ENGINEER

DEPARTMENT OF TRANSPORTATION
CHAIN LINK FENCE
STEEL POSTS - LINE POSTS

SPECIFICATION REFERENCE 2571
REVISED 12-10-2008 M.J.E.

STANDARD PLATE NO. 9322K 1 OF 2

8 SITE FENCE
NOT TO SCALE

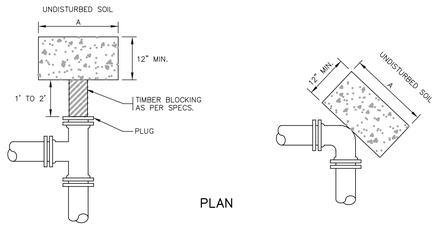

NOTE: DIMENSIONS A & B VARY ACCORDING TO PIPE SIZE & TEST PRESSURE

TABLE FOR 150 P.S.I. TEST PRESSURE		
DIA.	A	B
6"	2'-0"	1'-1"
8"	3'-0"	1'-3"
10"	3'-0"	2'-0"
12"	3'-0"	3'-0"

ELEVATION

1 WATERMAIN BLOCKING

NOT TO SCALE

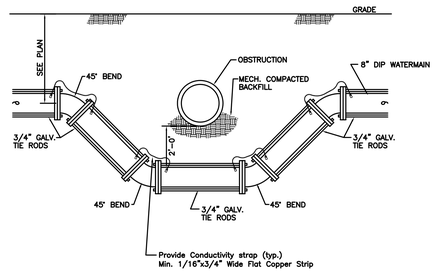

2 WATERMAIN OFFSET

NOT TO SCALE

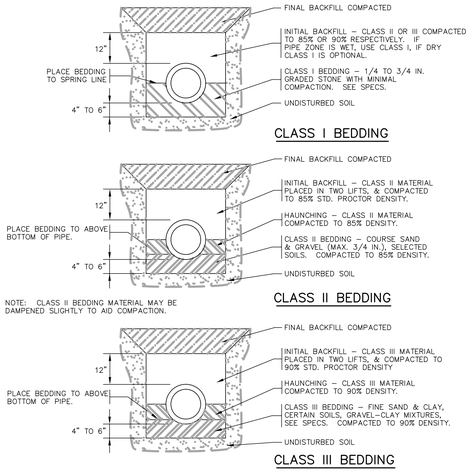

3 THERMOPLASTIC PIPE BEDDING

NOT TO SCALE

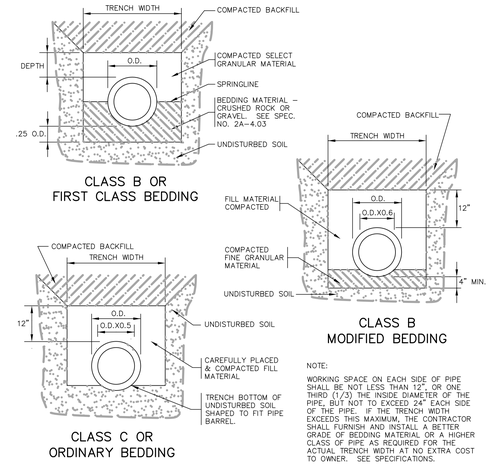

NOTE:
WORKING SPACE ON EACH SIDE OF PIPE SHALL BE NOT LESS THAN 12", OR ONE THIRD (1/3) THE INSIDE DIAMETER OF THE PIPE, BUT NOT TO EXCEED 24" EACH SIDE OF THE PIPE. IF THE TRENCH WIDTH EXCEEDS THIS MAXIMUM, THE CONTRACTOR SHALL FURNISH AND INSTALL A BETTER GRADE OF BEDDING MATERIAL OR A HIGHER CLASS OF PIPE AS REQUIRED FOR THE ACTUAL TRENCH WIDTH AT NO EXTRA COST TO OWNER. SEE SPECIFICATIONS.

4 PIPE BEDDING EXCEPT PVC

NOT TO SCALE

ARCHITECTURAL ALLIANCE
400 CLIFTON AVENUE SOUTH
MINNEAPOLIS, MINNESOTA 55403-3299
TELEPHONE (612) 871-5703
FAX (612) 871-7212

Structural Engineer
Meyer Borgman
12 South Sixth Street / Suite 810
Minneapolis, Minnesota 55402
(612) 338-0713

Mechanical, Electrical Engineer
Dunham Associates
50 South Sixth Street / Suite 1100
Minneapolis, Minnesota 55402
(612) 465-7550

Civil Engineers
EVS Inc.
10250 Valley View Road / Suite 12
Eden Praire, Minnesota 55344
(952) 646-0236

Landscape Architect
Damon Farber Associates
923 Nicollet Mall
Minneapolis, Minnesota 55402
(612) 332-7522

I hereby certify that this plan or drawing was prepared by me or under my direct supervision and that I am a duly licensed Engineer under the laws of the State of Minnesota.

For Architectural Alliance

By

Name Daniel E Bowar

Date 09/25/09 Reg. No. 45018

Issued for	Date
BID DOCUMENTS	09/25/09

Copyright 2009 Architectural Alliance

Comm. No. 2009019

Drawn PF/DB

Checked DEZ

Date 09/25/09

Project

MnDOT / Carver County
Chaska Truck Station

4725 Chaska Boulevard
Chaska, Mn 55318

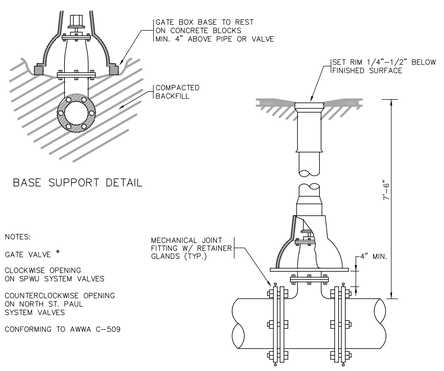

NOTES:

GATE VALVE *

CLOCKWISE OPENING ON SPWU SYSTEM VALVES

COUNTERCLOCKWISE OPENING ON NORTH ST. PAUL SYSTEM VALVES

CONFORMING TO AWWA C-509

* 12" WATER MAINS AND LARGER REQUIRE BUTTERFLY VALVES.

STANDARD VALVE BOX
TYLER SERIES 6860, ITEM G OR EQUAL

5 GATE VALVE BOX

NOT TO SCALE

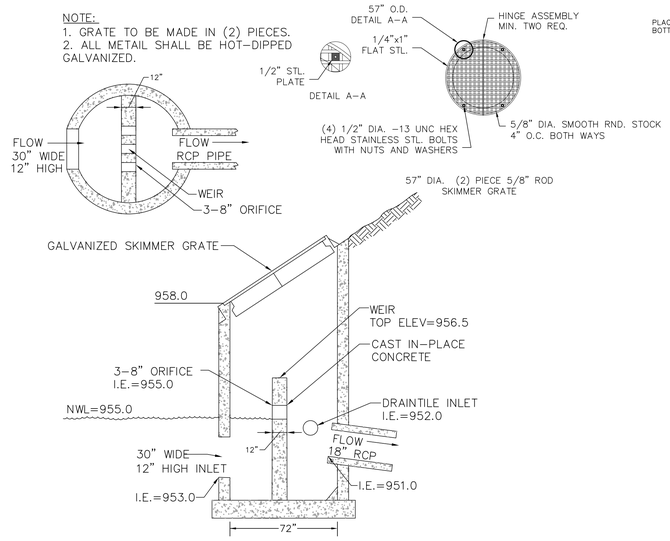

6 OUTLET CONTROL STRUCTURE

NOT TO SCALE

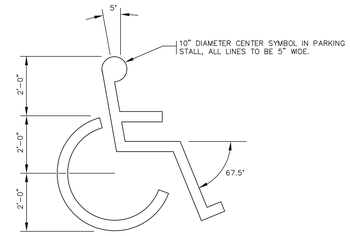

NOTE: PROVIDE DESIGNATED WHEEL CHAIR SYMBOL @ EACH HANDICAP PARKING STALL.

7 PAINTED WHEELCHAIR SYMBOL

NOT TO SCALE

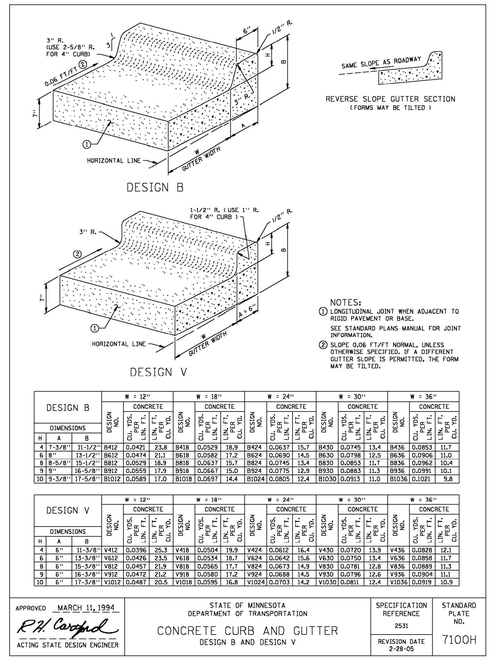

NOTES:
1. LONGITUDINAL JOINT WHEN ADJACENT TO RIGID PAVEMENT OR BASE. SEE STANDARD PLANS MANUAL FOR JOINT INFORMATION.
2. SLOPE 0.06 FT/FT NORMAL, UNLESS OTHERWISE SPECIFIED. IF A DIFFERENT GUTTER SLOPE IS PERMITTED, THE FORM MAY BE TILTED.

DESIGN B	W = 12"				W = 18"				W = 24"				W = 30"				W = 36"			
DIMENSIONS			CONCRETE				CONCRETE				CONCRETE				CONCRETE				CONCRETE	
H	A	B	DESIGN NO.	CU. YDS. PER LIN. FT.	CU. YDS. PER LIN. FT.	CU. YDS.	DESIGN NO.	CU. YDS. PER LIN. FT.	CU. YDS. PER LIN. FT.	CU. YDS.	DESIGN NO.	CU. YDS. PER LIN. FT.	CU. YDS. PER LIN. FT.	CU. YDS.	DESIGN NO.	CU. YDS. PER LIN. FT.	CU. YDS. PER LIN. FT.	CU. YDS.	DESIGN NO.	CU. YDS. PER LIN. FT.	CU. YDS. PER LIN. FT.	CU. YDS.
4	1-3/8"	11-1/2"	B412	0.0421	23.8	B418	0.0529	18.9	B424	0.0637	15.7	B430	0.0745	13.4	B436	0.0853	11.7
6	8"	13-1/2"	B612	0.0474	21.1	B618	0.0582	17.2	B624	0.0690	14.5	B630	0.0798	12.5	B636	0.0906	11.0
8	8-5/8"	15-1/2"	B812	0.0529	18.9	B818	0.0637	15.7	B824	0.0745	13.4	B830	0.0853	11.7	B836	0.0962	10.4
9	9"	16-5/8"	B912	0.0555	17.9	B918	0.0667	15.0	B924	0.0775	12.9	B930	0.0883	11.3	B936	0.0991	10.1
10	9-3/8"	17-5/8"	B1012	0.0583	17.0	B1018	0.0697	14.4	B1024	0.0805	12.4	B1030	0.0913	11.0	B1036	0.1021	9.8

DESIGN V	W = 12"				W = 18"				W = 24"				W = 30"				W = 36"			
DIMENSIONS			CONCRETE				CONCRETE				CONCRETE				CONCRETE				CONCRETE	
H	A	B	DESIGN NO.	CU. YDS. PER LIN. FT.	CU. YDS. PER LIN. FT.	CU. YDS.	DESIGN NO.	CU. YDS. PER LIN. FT.	CU. YDS. PER LIN. FT.	CU. YDS.	DESIGN NO.	CU. YDS. PER LIN. FT.	CU. YDS. PER LIN. FT.	CU. YDS.	DESIGN NO.	CU. YDS. PER LIN. FT.	CU. YDS. PER LIN. FT.	CU. YDS.	DESIGN NO.	CU. YDS. PER LIN. FT.	CU. YDS. PER LIN. FT.	CU. YDS.
4	6"	11-3/8"	V412	0.0396	25.3	V418	0.0504	19.9	V424	0.0612	16.4	V430	0.0720	13.9	V436	0.0828	12.1
6	6"	13-3/8"	V612	0.0426	23.5	V618	0.0534	18.7	V624	0.0642	15.6	V630	0.0750	13.4	V636	0.0858	11.7
8	6"	15-3/8"	V812	0.0457	21.9	V818	0.0565	17.7	V824	0.0673	14.9	V830	0.0781	12.8	V836	0.0889	11.3
9	6"	16-3/8"	V912	0.0472	21.2	V918	0.0580	17.2	V924	0.0688	14.5	V930	0.0796	12.6	V936	0.0904	11.1
10	6"	17-3/8"	V1012	0.0487	20.5	V1018	0.0595	16.8	V1024	0.0703	14.2	V1030	0.0811	12.4	V1036	0.0919	10.9

APPROVED MARCH 11, 1994	STATE OF MINNESOTA DEPARTMENT OF TRANSPORTATION	SPECIFICATION REFERENCE	STANDARD PLATE NO.
R.H. Campbell	CONCRETE CURB AND GUTTER	2531	7100H
ACTING STATE DESIGN ENGINEER	DESIGN B AND DESIGN V	REVISION DATE 2-28-05	

8 CONCRETE CURB AND GUTTER

NOT TO SCALE

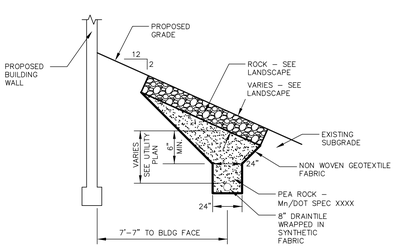

SEE ARCH. DETAIL 4E/A4.12 FOR REFERENCE AND ADDITIONAL DETAIL.

9 DRAINTILE AT BUILDING WALL

NOT TO SCALE

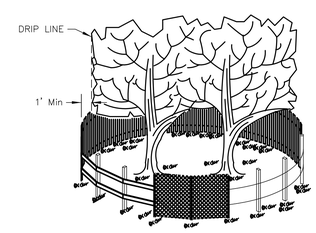

SIDE VIEW

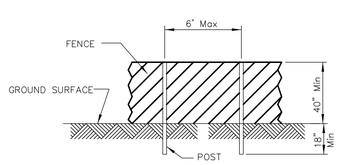

POST AND FENCE DETAIL

NOTES:
1. THE FENCE SHALL BE LOCATED A MINIMUM OF 1 FOOT OUTSIDE THE DRIP LINE OF THE TREE TO BE SAVED AND IN NO CASE CLOSER THAN 5 FEET TO THE TRUNK OF ANY TREE.
2. FENCE POSTS SHALL BE EITHER STANDARD STEEL POSTS OR WOOD POSTS WITH A MINIMUM CROSS SECTIONAL AREA OF 3.0 SQ. IN.
3. THE FENCE MAY BE EITHER 40" HIGH SNOW FENCE, 40" PLASTIC WEB FENCING OR ANY OTHER MATERIAL AS APPROVED BY THE ENGINEER/INSPECTOR.

10 TREE PROTECTION FENCE

NOT TO SCALE

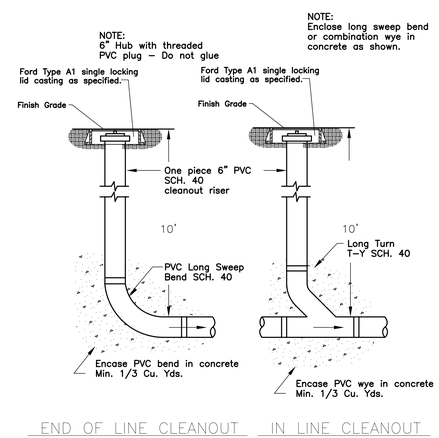

11 CLEANOUT

NOT TO SCALE

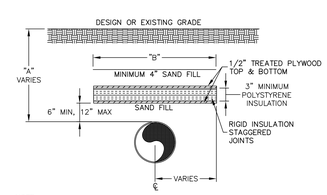

NOTE:
PIPE SHALL BE CENTERED UNDER INSULATION UNLESS OTHERWISE SPECIFIED.

COVER OVER PIPE – A	WIDTH OF INSULATING BOARD – B
2'	12'
3'	10'
4'	8'
5'	6'
6'	4'

12 WATERMAIN INSULATION

NOT TO SCALE

Construction Details

c112

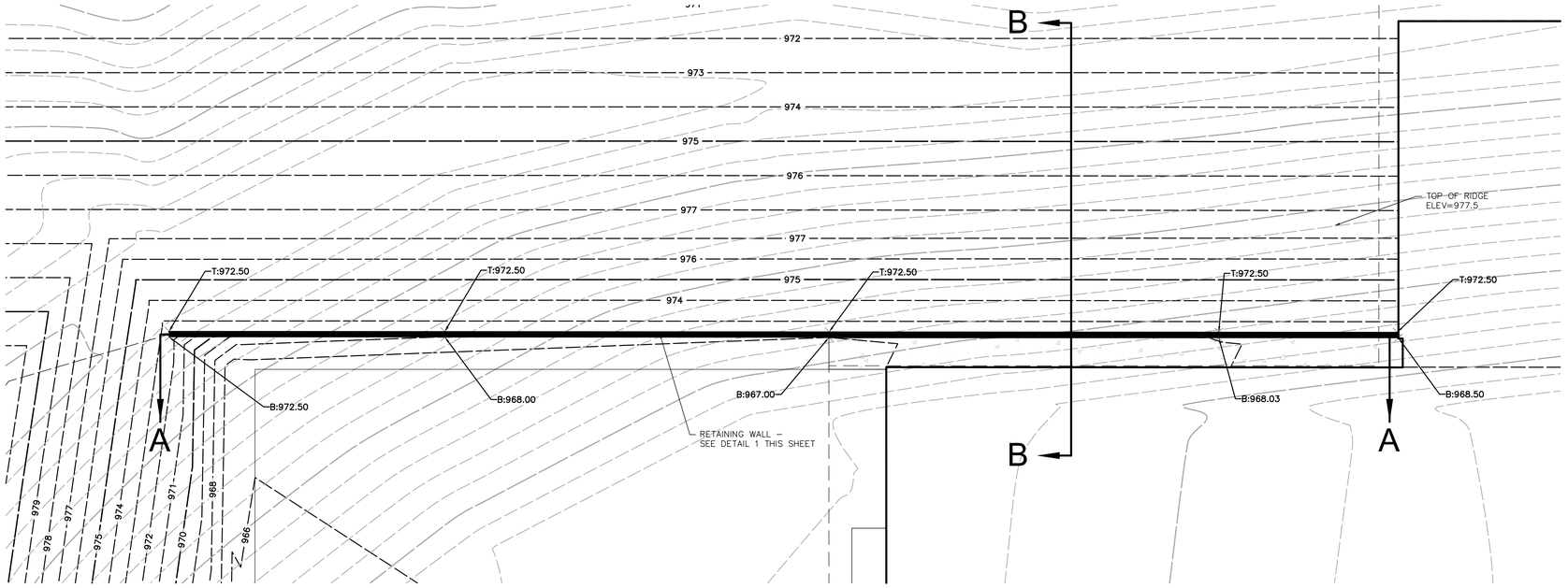

RETAINING WALL PLAN VIEW

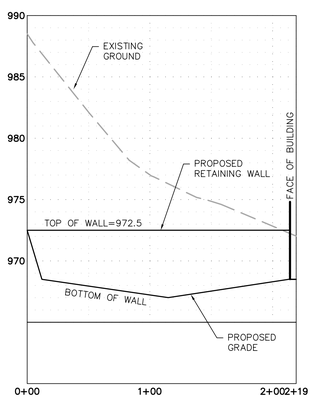

RETAINING WALL DETAIL A-A

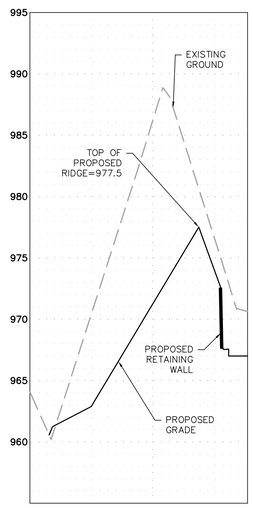

RETAINING WALL DETAIL B-B

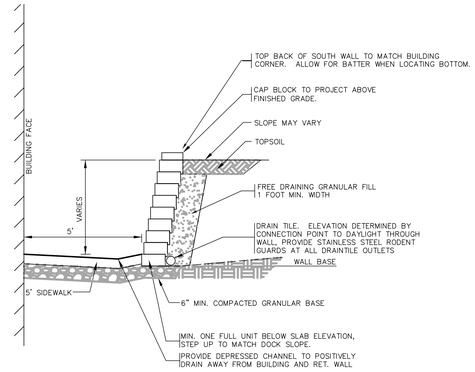

NOTES:

1. THE CONTRACTOR SHALL PROVIDE CONSTRUCTION DRAWINGS AND CALCULATIONS FOR THE SEGMENTAL RETAINING WALL SYSTEM CERTIFIED BY A REGISTERED PROFESSIONAL ENGINEER EXPERIENCED IN SEGMENTAL RETAINING WALL DESIGN. PROVIDE TIE BACK OR SOIL REINFORCING IN SEGMENTAL WALL SYSTEM REQUIRED FOR THE WALL HEIGHTS SHOWN.

2. THE EXPOSED WALL FACE SHALL BE A SPLIT FACE OR SIMULATED ROCK FACE LIGHT BROWN EARTH TONE IN COLOR. SUBMIT BLOCK SAMPLES SUBJECT TO REVIEW AND APPROVAL BY THE OWNER.

1 SEGMENTAL BLOCK RET. WALL

NOT TO SCALE

GRADING NOTES

1. CONTRACTOR SHALL FIELD VERIFY THE LOCATIONS AND ELEVATIONS OF EXISTING UTILITIES AND TOPOGRAPHIC FEATURES PRIOR TO START OF SITE GRADING. THE CONTRACTOR SHALL IMMEDIATELY NOTIFY THE COUNCIL'S AUTHORITY REPRESENTATIVE (CAR) OF ANY DISCREPANCIES OR VARIATIONS FROM PLANS.

2. CONTRACTOR IS TO CONTACT "GOPHER STATE ONE CALL" FOR UTILITY LOCATIONS - (651)454-0002 48 HOURS PRIOR TO EXCAVATION\CONSTRUCTION.

3. REFER TO SHEET C102 FOR HORIZONTAL DIMENSIONS AND LAYOUT.

4. THE SITE GRADING OPERATIONS, WHEN COMPLETED SHALL RESULT IN ALL AREAS BEING GRADED TO "PLAN SUBGRADE ELEVATION". THE "PLAN SUBGRADE ELEVATION" IN THE PARKING LOT AND DRIVEWAY AREAS SHALL BE DETERMINED BY CHECKING THE PAVEMENT SECTION DETAILS, AND REFERRING TO PAVING PLAN FOR LOCATION AND LIMITS OF VARIOUS PAVEMENT SECTIONS.

ARCHITECTURAL ALLIANCE

400 Clifton Avenue South

Minneapolis, Minnesota 55403-3299

Telephone (612) 871-5703

Fax (612) 871-7212

Structural Engineer

Meyer Borgman

12 South Sixth Street / Suite 810
Minneapolis, Minnesota 55402
(612) 338-0713

Mechanical, Electrical Engineer

Dunham Associates

50 South Sixth Street / Suite 1100
Minneapolis, Minnesota 55402
(612) 465-7550

Civil Engineers

EVS Inc.

10250 Valley View Road / Suite 12
Eden Praire, Minnesota 55344
(952) 646-0236

Landscape Architect

Damon Farber Associates

923 Nicollet Mall
Minneapolis, Minnesota 55402
(612) 332-7522

I hereby certify that this plan or drawing was prepared by me or under my direct supervision and that I am a duly licensed Engineer under the laws of the State of Minnesota.

For Architectural Alliance

By

Name Daniel E Bowar

Date 09/25/09 Reg. No. 45018

Issued for	Date
BID DOCUMENTS	09/25/09

Copyright 2009 Architectural Alliance

Comm. No. 2009019

Drawn PF/DB

Checked DEZ

Date 09/25/09

Project

MnDOT / Carver County
Chaska Truck Station

4725 Chaska Boulevard
Chaska, Mn 55318

Retaining Wall
Detail

0 10 20
SCALE IN FEET

c113

LANDSCAPE PLAN

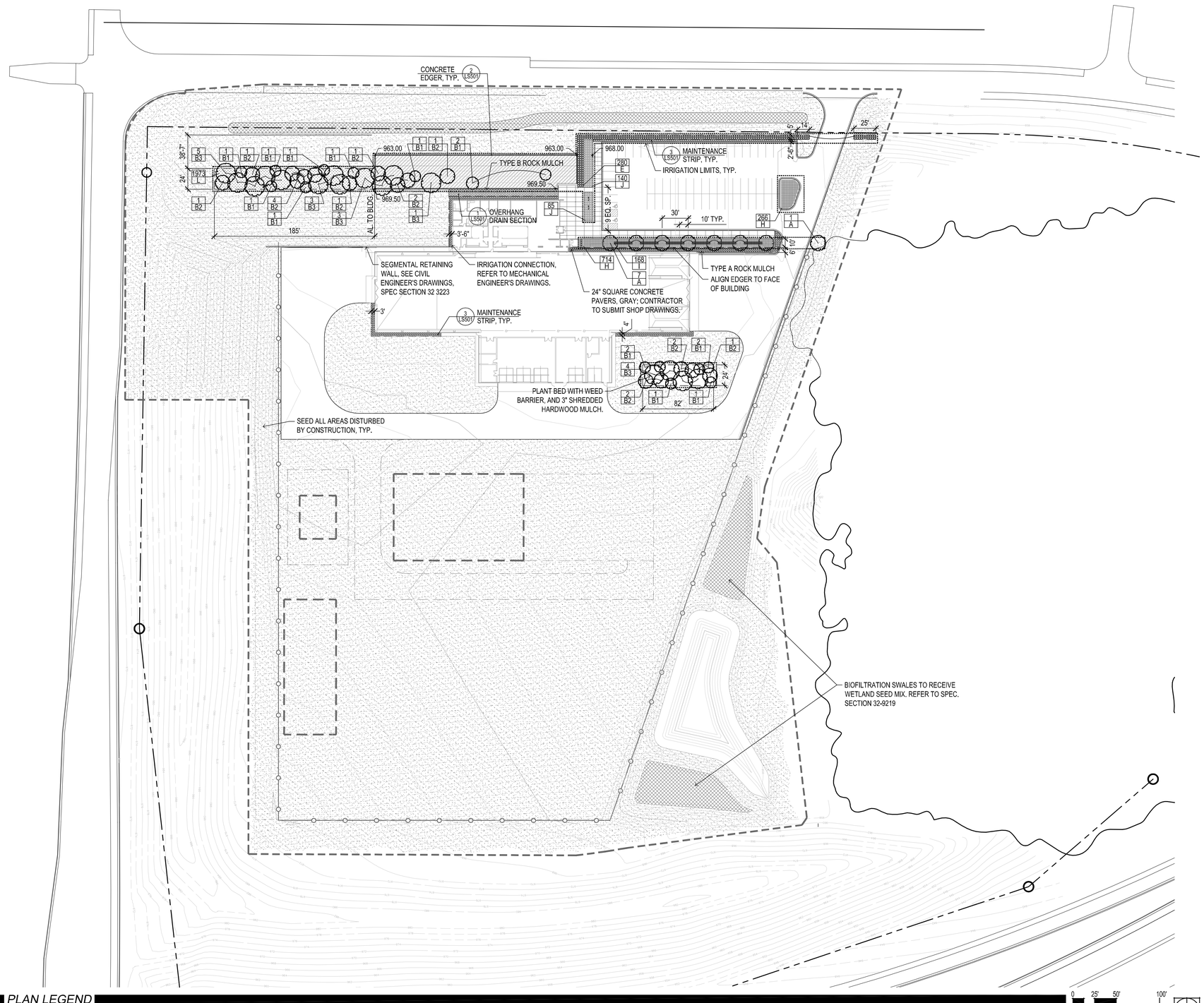

PLAN LEGEND

- LIMIT OF WORK
- PROPERTY BOUNDARY
- IRRIGATION LIMITS
- CONTROL JOINT
- STEEL EDGING
- AL. ALIGN TO OBJECT

TREE-DECIDUOUS OVERSTORY
SEE DETAIL 5, SHEET LS501

TREE-DECIDUOUS CLUMP FORM
SEE DETAIL 5, SHEET LS501

SHRUB-DECIDUOUS
SEE DETAIL 6, SHEET LS501

PERENNIAL
SEE DETAIL 4, SHEET LS501

TYPE A ROCK MULCH
SEE SPEC SECTION 32 9300

TYPE B ROCK MULCH
SEE SPEC SECTION 32 9300

SHORT GRASS PRAIRIE MIX
SEE SPEC SECTION 32 9219

WETLAND SEED MIX
SEE SPEC SECTION 32 9219

GROUNDCOVER
SEE PLANT LEGEND

TURF SOD
SEE SPEC SECTION 32 9223

NOTES

GENERAL NOTES

1. CONTRACTOR SHALL INSPECT THE SITE AND BECOME FAMILIAR WITH EXISTING CONDITIONS RELATING TO THE NATURE AND SCOPE OF WORK.
2. CONTRACTOR SHALL VERIFY PLAN LAYOUT AND BRING TO THE ATTENTION OF THE LANDSCAPE ARCHITECT DISCREPANCIES WHICH MAY COMPROMISE THE DESIGN OR INTENT OF THE LAYOUT.
3. CONTRACTOR SHALL ASSURE COMPLIANCE WITH APPLICABLE CODES AND REGULATIONS GOVERNING THE WORK AND MATERIALS SUPPLIED.
4. CONTRACTOR SHALL PROTECT EXISTING ROADS, CURBS/GUTTERS, TRAILS, TREES, LAWNS AND SITE ELEMENTS DURING CONSTRUCTION OPERATIONS. DAMAGE TO SAME SHALL BE REPAIRED AT NO ADDITIONAL COST TO THE OWNER.
5. CONTRACTOR SHALL VERIFY ALIGNMENT AND LOCATION OF UNDERGROUND AND ABOVE GRADE UTILITIES AND PROVIDE THE NECESSARY PROTECTION FOR SAME BEFORE CONSTRUCTION BEGINS (MINIMUM 10' CLEARANCE).
6. CONTRACTOR SHALL COORDINATE THE PHASES OF CONSTRUCTION AND PLANTING INSTALLATION WITH OTHER CONTRACTORS WORKING ON SITE.
7. UNDERGROUND UTILITIES SHALL BE INSTALLED SO THAT TRENCHES DO NOT CUT THROUGH ROOT SYSTEMS OF EXISTING TREES TO REMAIN.
8. EXISTING CONTOURS, TRAILS, VEGETATION, CURB/GUTTER AND OTHER ELEMENTS ARE BASED UPON INFORMATION SUPPLIED TO THE LANDSCAPE ARCHITECT BY OTHERS. CONTRACTOR SHALL VERIFY DISCREPANCIES PRIOR TO CONSTRUCTION AND NOTIFY LANDSCAPE ARCHITECT OF SAME.
9. HORIZONTAL AND VERTICAL ALIGNMENT OF PROPOSED WALKS, TRAILS OR ROADWAYS ARE SUBJECT TO FIELD ADJUSTMENT REQUIRED TO CONFORM TO LOCALIZED TOPOGRAPHIC CONDITIONS AND TO MINIMIZE TREE REMOVAL AND GRADING. CHANGES IN ALIGNMENT AND GRADES MUST BE APPROVED BY THE LANDSCAPE ARCHITECT PRIOR TO IMPLEMENTATION.
10. CONTRACTOR SHALL REVIEW THE SITE FOR DEFICIENCIES IN SITE CONDITIONS WHICH MIGHT NEGATIVELY AFFECT PLANT ESTABLISHMENT, SURVIVAL OR WARRANTY. UNDESIRABLE SITE CONDITIONS SHALL BE BROUGHT TO THE ATTENTION OF THE LANDSCAPE ARCHITECT PRIOR TO BEGINNING OF WORK.
11. CONTRACTOR IS RESPONSIBLE FOR ONGOING MAINTENANCE OF NEWLY INSTALLED MATERIALS UNTIL TIME OF SUBSTANTIAL COMPLETION. REPAIR OF ACTS OF VANDALISM OR DAMAGE WHICH MAY OCCUR PRIOR TO SUBSTANTIAL COMPLETION SHALL BE THE RESPONSIBILITY OF THE LANDSCAPE CONTRACTOR.
12. EXISTING TREES OR SIGNIFICANT SHRUB MASSINGS FOUND ON SITE SHALL BE PROTECTED AND SAVED UNLESS NOTED TO BE REMOVED OR ARE LOCATED IN AN AREA TO BE GRADED. QUESTIONS REGARDING EXISTING PLANT MATERIAL SHALL BE BROUGHT TO THE ATTENTION OF THE LANDSCAPE ARCHITECT PRIOR TO REMOVAL.
13. EXISTING TREES TO REMAIN, UPON DIRECTION OF LANDSCAPE ARCHITECT, SHALL BE FERTILIZED AND PRUNED TO REMOVE DEAD WOOD, DAMAGED AND RUBBING BRANCHES.
14. CONTRACTOR SHALL PREPARE AND SUBMIT A WRITTEN REQUEST FOR THE SUBSTANTIAL COMPLETION INSPECTION OF LANDSCAPE AND SITE IMPROVEMENTS PRIOR TO SUBMITTING FINAL PAY REQUEST.
15. CONTRACTOR SHALL PREPARE AND SUBMIT REPRODUCIBLE AS-BUILT DRAWING(S) OF LANDSCAPE INSTALLATION, IRRIGATION AND SITE IMPROVEMENTS UPON COMPLETION OF CONSTRUCTION INSTALLATION AND PRIOR TO SUBSTANTIAL COMPLETION.
16. SYMBOLS ON PLAN DRAWING TAKE PRECEDENCE OVER SCHEDULES IF DISCREPANCIES IN QUANTITIES EXIST. SPECIFICATIONS AND DETAILS TAKE PRECEDENCE OVER NOTES.

IRRIGATION NOTES

1. CONTRACTOR SHALL BE RESPONSIBLE FOR PROVIDING AN IRRIGATION LAYOUT PLAN AND SPECIFICATION AS PART OF THE SCOPE OF WORK. SUBMIT LAYOUT PLAN AND SPECIFICATIONS FOR APPROVAL BY THE LANDSCAPE ARCHITECT PRIOR TO ORDER AND/OR CONSTRUCTION. IT SHALL BE THE CONTRACTOR'S RESPONSIBILITY TO ENSURE THAT SODDED/SEEDED AND PLANTED AREAS ARE IRRIGATED PROPERLY, INCLUDING THOSE AREAS DIRECTLY AROUND AND ABUTTING BUILDING FOUNDATION.
2. CONTRACTOR SHALL VERIFY (EXISTING) IRRIGATION SYSTEM LAYOUT AND CONFIRM COMPLETE LIMITS OF IRRIGATION PRIOR TO SUPPLYING SHOP DRAWINGS.
6. CONTRACTOR TO REFER TO MECHANICAL ENGINEER FOR IRRIGATION CONNECTION.
7. CONTRACTOR SHALL CONTACT LANDSCAPE ARCHITECT FOR INSPECTION AND APPROVAL OF ALL AREAS RECEIVING DRIP IRRIGATION PRIOR TO INSTALLATION OF ANY MULCH.
8. CONTRACTOR SHALL PROVIDE THE OWNER WITH AN IRRIGATION SCHEDULE APPROPRIATE TO THE PROJECT SITE CONDITIONS AND TO PLANTED MATERIAL GROWTH REQUIREMENTS.
9. CONTRACTOR SHALL ENSURE THAT SOIL CONDITIONS AND COMPACTION ARE ADEQUATE TO ALLOW FOR PROPER DRAINAGE AROUND THE CONSTRUCTION SITE. UNDESIRABLE CONDITIONS SHALL BE BROUGHT TO THE ATTENTION OF THE LANDSCAPE ARCHITECT PRIOR TO BEGINNING OF WORK. IT SHALL BE THE LANDSCAPE CONTRACTOR'S RESPONSIBILITY TO ENSURE PROPER SURFACE AND SUBSURFACE DRAINAGE IN PLANTING AREAS.

ARCHITECTURAL ALLIANCE

400 Clifton Avenue South

Minneapolis, Minnesota 55403-3299

Telephone (612) 871-5703

Fax (612) 871-7212

Structural Engineer

Meyer, Borgman and Johnson
12 South Sixth Street / Suite 810
Minneapolis, Minnesota 55402
(612) 338-0713

Mechanical, Electrical Engineer

Dunham Associates
50 South Sixth Street / Suite 1100
Minneapolis, Minnesota 55402
(612) 465-7550

Civil Engineers

EVS Inc.
10250 Valley View Road / Suite 12
Eden Prairie, Minnesota 55344
(952) 646-0238

Landscape Architect

Damon Farber Associates
923 Nicollet Mall
Minneapolis, Minnesota 55402
(612) 332-7522

I hereby certify that this plan or drawing was prepared by me or under my direct supervision and that I am a duly licensed Landscape Architect under the laws of the State of Minnesota.

For Damon Farber Associates

By Tom Whitlock

Name

Date 09/25/09 Reg. No. 26292

Issued for	Date
BID DOCUMENTS	09/18/09

Copyright 2009 Architectural Alliance

Comm. No. 2009019

Drawn LS

Checked TW

Date 09/25/09

Project

MnDOT / Carver County
Chaska Truck Station

4725 Chaska Boulevard
Chaska, Mn 55318

Landscape Plan

ls101

ARCHITECTURAL ALLIANCE

400 CLIFTON AVENUE SOUTH

MINNEAPOLIS, MINNESOTA 55403-3299

TELEPHONE (612) 871-5703

FAX (612) 871-7212

Structural Engineer

Meyer, Borgman and Johnson

12 South Sixth Street / Suite 810
Minneapolis, Minnesota 55402
(612) 338-0713

Mechanical, Electrical Engineer

Dunham Associates

50 South Sixth Street / Suite 1100
Minneapolis, Minnesota 55402
(612) 465-7550

Civil Engineers

EVS Inc.

10250 Valley View Road / Suite 12
Eden Prairie, Minnesota 55344
(952) 646-0238

Landscape Architect

Damon Farber Associates

923 Nicollet Mall
Minneapolis, Minnesota 55402
(612) 332-7522

SUBMITTAL CHECKLIST

DATE SUBMITTED	SPEC. SECTION	SUBMITTAL ITEM
	32 3223	SEGMENTAL RETAINING WALL PRODUCT DATA (CUTSHEETS) - 3 SETS
	32 3223	SEGMENTAL RETAINING WALL SAMPLES FOR VERIFICATION - 3 SETS
	32 3223	SEGMENTAL RETAINING WALL SHOP DRAWINGS - 3 SETS
	32 3223	SEGMENTAL RETAINING WALL DESIGN CALCULATIONS - 3 SETS
	32 3223	SEGMENTAL RETAINING WALL TEST REPORTS - 3 SETS
	32 8400	IRRIGATION PRODUCT DATA (CUTSHEETS) - 3 SETS
	32 8400	IRRIGATION PLAN SHOP DRAWINGS - 3 COPIES
	32 8400	IRRIGATION OPERATION & MAINTENANCE MANUAL - 2 COPIES
	32 9219	SOILS REPORT - 3 COPIES
	32 9219	GROWERS CERTIFICATION - 3 COPIES
	32 9219	PRODUCT CERTIFICATES: SOIL AMENDMENTS / FERTILIZER - 3 COPIES
	32 9219	QUALIFICATIONS FOR APPLICATOR / INSTALLER - 3 COPIES
	32 9219	SEEDING SCHEDULE - 3 COPIES
	32 9223	SOILS REPORT - 3 COPIES
	32 9223	SOD PRODUCT DATA - 3 COPIES
	32 9223	PRODUCT CERTIFICATES: SOIL AMENDMENTS / FERTILIZER - 3 COPIES
	32 9223	QUALIFICATIONS FOR APPLICATOR / INSTALLER - 3 COPIES
	32 9223	SODDING SCHEDULE - 3 COPIES
	32 9300	PRODUCT DATA: EDGER, WEED BARRIER FABRIC - 3 SETS
	32 9300	ORGANIC MULCH SAMPLES - (2) 1-QT. BAGS
	32 9300	MINERAL MULCH SAMPLES - (2) 1-QT. BAGS
	32 9300	LANDSCAPE INSTALLERS' QUALIFICATION DATA - 3 COPIES
	32 9300	LANDSCAPE PLANTING SCHEDULE - 3 COPIES
	32 9300	MAINTENANCE INSTRUCTION MANUAL FOR OWNER - 2 COPIES
		PRODUCT DATA: 24" sq. CONCRETE PAVERS - 3 SETS

PLANTING LEGEND

SYM	QTY	COMMON NAME	SCIENTIFIC NAME	SIZE	ROOT COND.	ROOT BALL / CONT. SIZE	COMMENTS
DECIDUOUS OVERSTORY TREES							
A	8	MAPLE, AUTUMN BLAZE	Acer x freemanii 'Jeffersred'	3.5" CAL	B&B	28" MIN. DIA.	
B1	15	BIRCH, PRAIRIE DREAM CLUMP	Betula papyrifera 'Varen'	5' HGT	POT	#10 CONT.	4' DIA. FLAT MULCH RING IN TURF
B2	16	BIRCH, PRAIRIE DREAM CLUMP	Betula papyrifera 'Varen'	6' HGT	B&B	24" MIN DIA.	4' DIA. FLAT MULCH RING IN TURF
B3	16	BIRCH, PRAIRIE DREAM CLUMP	Betula papyrifera 'Varen'	8' HGT	B&B	30" MIN. DIA.	4' DIA. FLAT MULCH RING IN TURF
DECIDUOUS SHRUBS							
E	280	CHOKEBERRY, AUTUMN MAGIC	Aronia melanocarpa 'Autumn Magic'	24" HGT	POT	#5 CONT.	PLANT 2.5' O.C.
PERENNIALS							
H	980	LITTLE BLUE STEM	Schizachyrium scoparium	12" HGT	POT	#1 CONT.	PLANT 18" O.C.
I	168	FEATHER REED GRASS	Calamagrostis x acutiflora 'Karl Foerster'	12" HGT	POT	#1 CONT.	PLANT 18" O.C.
J	225	CATMINT, WALKER'S LOW	Nepeta x faasenii 'Walker's Low'	12" HGT	POT	#1 CONT.	PLANT 24" O.C.
GROUND COVER							
L	1973	VINCA, DART'S BLUE	Vinca minor 'Dart's Blue'	4" HGT	POT	6 PK	PLANT 18" O.C.

NOTES

PLANTING NOTES

1. NO PLANTS WILL BE INSTALLED UNTIL FINAL GRADING AND CONSTRUCTION HAS BEEN COMPLETED IN THE IMMEDIATE AREA.
2. PROPOSED PLANT MATERIAL SHALL COMPLY WITH THE CURRENT EDITION OF THE AMERICAN STANDARD FOR NURSERY STOCK, ANSI Z60.1. UNLESS NOTED OTHERWISE, DECIDUOUS SHRUBS SHALL HAVE AT LEAST 5 CANES AT THE SPECIFIED HEIGHT. ORNAMENTAL TREES SHALL HAVE NO 'V' CROTCHES AND SHALL BEGIN BRANCHING NO LOWER THAN 3' FEET ABOVE THE ROOT BALL. STREET AND BOULEVARD TREES SHALL BEGIN BRANCHING NO LOWER THAN 6' ABOVE PAVED SURFACE.
3. PROPOSED PLANT MATERIAL SHALL BE LOCATED AND STAKED AS SHOWN ON PLAN. LANDSCAPE ARCHITECT MUST APPROVE STAKING OF PLANT MATERIAL PRIOR TO DIGGING.
4. NO PLANT MATERIAL SUBSTITUTIONS WILL BE ACCEPTED UNLESS APPROVAL IS GRANTED BY THE LANDSCAPE ARCHITECT TO THE CONTRACTOR PRIOR TO THE SUBMISSION OF BID.
5. ADJUSTMENTS IN LOCATION OF PROPOSED PLANT MATERIALS MAY BE NEEDED IN FIELD. LANDSCAPE ARCHITECT MUST BE NOTIFIED PRIOR TO ADJUSTMENT OF PLANTS.
6. PLANT MATERIALS TO BE INSTALLED PER PLANTING DETAILS.
7. PLANT MATERIAL SHALL BE FERTILIZED UPON INSTALLATION WITH DRIED BONE MEAL, OTHER APPROVED FERTILIZER MIXED IN WITH THE PLANTING SOIL PER THE MANUFACTURER'S INSTRUCTIONS OR MAY BE TREATED FOR SUMMER AND FALL INSTALLATION WITH AN APPLICATION OF GRANULAR 10-0-5 OF 12 OZ. PER 2.5" CALIPER TREE AND 6 OZ. PER SHRUB WITH AN ADDITIONAL APPLICATION OF 10-0-10 THE FOLLOWING SPRING IN THE TREE SAUCER.
8. PLANTING AREAS RECEIVING GROUND COVER, PERENNIALS, ANNUALS OR VINES SHALL RECEIVE A MINIMUM OF 18" DEPTH OF PLANTING SOIL CONSISTING OF 45 PARTS TOPSOIL, 45 PARTS SCREENED COMPOST AND 10 PARTS SAND OR AS OTHERWISE SPECIFIED.
9. TREE WRAPPING MATERIAL SHALL BE TWO-WALLED PLASTIC SHEETING APPLIED FROM TRUNK FLARE TO FIRST BRANCH. WRAP SMOOTH-BARKED DECIDUOUS TREES PLANTED IN THE FALL PRIOR TO DECEMBER 1 AND REMOVE WRAPPING AFTER MAY 1.
10. 3/16" THICK STEEL EDGER TO BE USED TO CONTAIN SHRUBS, PERENNIALS AND ANNUALS WHERE PLANTING BED MEETS SOD UNLESS OTHERWISE NOTED.
11. ANNUAL, PERENNIAL, AND SHRUB BEDS ARE TO RECEIVE APPLICATION OF PRE-EMERGENT HERBICIDE (PREEN OR APPROVED EQUAL) FOLLOWED BY 3" DEEP SHREDDED HARDWOOD MULCH. REFER TO SPECIFICATIONS FOR ADDITIONAL INFORMATION REGARDING USE OF HERBICIDES.
12. CONIFEROUS & DECIDUOUS TREES ARE TO RECEIVE 3" DEEP SHREDDED HARDWOOD MULCH AND SHALL HAVE NO MULCH IN DIRECT CONTACT WITH THE TREE TRUNK.
13. MAINTENANCE STRIPS, WHERE ILLUSTRATED, TO HAVE EDGER AND MULCH AS INDICATED ON DRAWINGS OR IN SPECIFICATIONS.
14. CONTRACTOR SHALL WARRANTY NEW PLANT MATERIAL THROUGH ONE CALENDAR YEAR FROM THE DATE OF SUBSTANTIAL COMPLETION. NO PARTIAL ACCEPTANCE WILL BE CONSIDERED.
15. UNLESS NOTED OTHERWISE, THE APPROPRIATE DATES FOR SPRING PLANT MATERIAL INSTALLATION IS FROM THE TIME GROUND HAS THAWED TO JUNE 15.
16. CONIFEROUS PLANTING IS ACCEPTABLE FROM AUGUST 15 TO OCTOBER 1. FALL DECIDUOUS PLANTING IS ACCEPTABLE FROM THE FIRST FROST UNTIL NOVEMBER 15. ADJUSTMENTS TO PLANTING DATES MUST BE APPROVED IN WRITING BY THE LANDSCAPE ARCHITECT.

TURF NOTES

1. SOD AREAS DISTURBED DUE TO GRADING UNLESS NOTED OTHERWISE.
2. WHERE SOD ABUTS PAVED SURFACES, FINISHED GRADE OF SOD/SEED SHALL BE HELD 1" BELOW SURFACE ELEVATION OF TRAIL, SLAB, CURB, ETC.
3. SOD SHALL BE LAID PARALLEL TO THE CONTOURS AND SHALL HAVE STAGGERED JOINTS. ON SLOPES STEEPER THAN 3:1 OR IN DRAINAGE SWALES, SOD SHALL BE STAKED SECURELY.
4. UNLESS NOTED OTHERWISE, THE APPROPRIATE DATES FOR SPRING SEED & SOD PLACEMENT IS FROM THE TIME GROUND HAS THAWED TO JUNE 15.
5. FALL SODDING IS ACCEPTABLE FROM AUGUST 15 TO NOVEMBER 1. FALL SEEDING IS ACCEPTABLE FROM AUGUST 15 TO SEPTEMBER 15. ADJUSTMENTS TO SOD/SEED PLANTING DATES MUST BE APPROVED IN WRITING BY THE LANDSCAPE ARCHITECT.

DETAILS

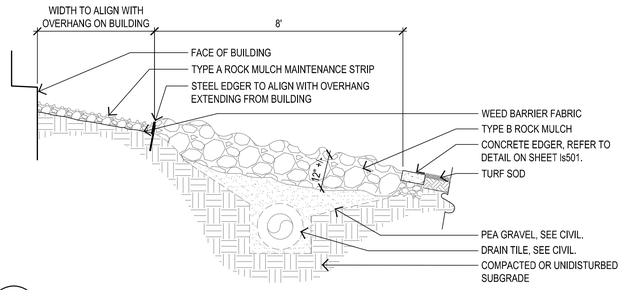

1 LS501 OVERHANG DRAIN SECTION
SCALE: 1/2" = 1'-0"

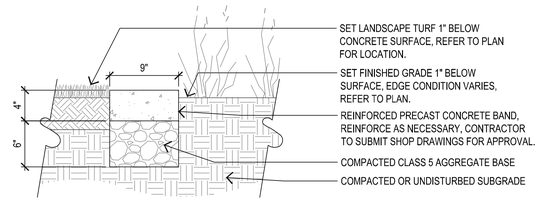

2 LS501 CONCRETE EDGER DETAIL
SCALE: 1-1/2" = 1'-0"
PAVING DETAIL - AGGREGATE PATH WITH CONCRETE EDGER.DWG

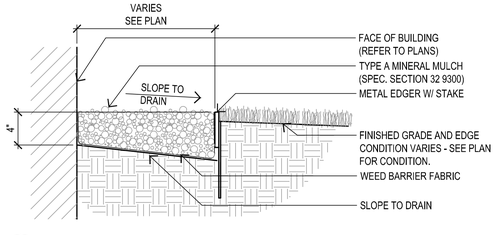

3 LS501 MAINTENANCE STRIP - MINERAL MULCH
SCALE: 1-1/2" = 1'-0"
DETAIL - MAINTENANCE STRIP.DWG

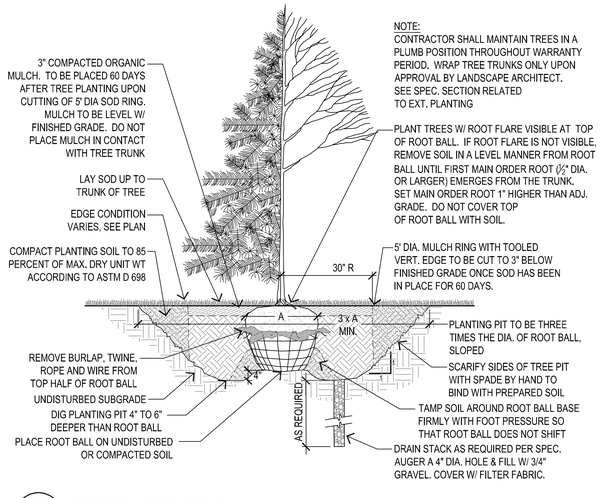

5 LS501 TREE PLANTING DETAIL
SCALE: 1/2" = 1'-0"
PLANTING DETAIL - TREE.DWG

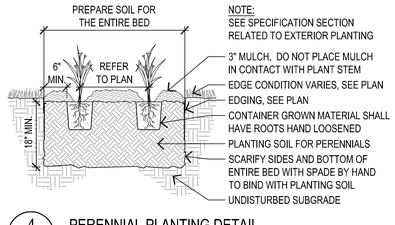

4 LS501 PERENNIAL PLANTING DETAIL
SCALE: 3/4" = 1'-0"
PLANTING DETAIL - PERENNIAL.DWG

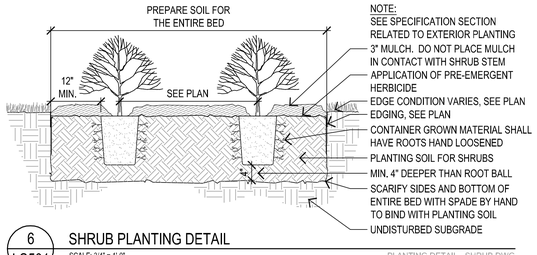

6 LS501 SHRUB PLANTING DETAIL
SCALE: 3/4" = 1'-0"
PLANTING DETAIL - SHRUB.DWG

I hereby certify that this plan or drawing was prepared by me or under my direct supervision and that I am a duly licensed Landscape Architect under the laws of the State of Minnesota.

For Damon Farber Associates

By Tom Whitlock

Name

Date 09/25/09 Reg. No. 26292

Issued for	Date
BID DOCUMENTS	09/18/09

Copyright 2009 Architectural Alliance

Comm. No. 2009019

Drawn LS

Checked TW

Date 09/25/09

Project

MnDOT / Carver County
Chaska Truck Station

4725 Chaska Boulevard
Chaska, Mn 55318

Landscape Details

ls501