EAU DEC 08

PROJECT ID: 1023-05-75 & 1023-02-65
WITH: N/A

COUNTY: JACKSON & MONROE

ORDER OF SHEETS

Section No.	1	Title
Section No.	2	Typical Sections and Details (includes erosion control)
Section No.	3	Estimate of Quantities
Section No.	3	Miscellaneous Quantities
~~Section No.~~	~~4~~	~~Right of Way Plat~~
Section No.	5	Plan and Profile
Section No.	6	Standard Detail Drawings
Section No.	7	Sign Plates
Section No.	8	Structure Plans
Section No.	9	Computer Earthwork Data
Section No.	9	Cross Sections

TOTAL SHEETS = 350

STATE OF WISCONSIN
DEPARTMENT OF TRANSPORTATION

PLAN OF PROPOSED IMPROVEMENT

STATE PROJECT	FEDERAL PROJECT	
	PROJECT	CONTRACT
1023-05-75	IM 2008688	1
1023-02-65	IM 2008687	1

BLACK RIVER FALLS - TOMAH ROAD

CTH O - CTH EW (WESTBOUND) (B-27-60, B-41-63,-65,-67)

IH 94 — JACKSON & MONROE COUNTIES

IH 94 — JACKSON & MONROE COUNTIES

30

N

STATE PROJECT NUMBER **1023-05-75**

STATE PROJECT NUMBER **1023-02-65**

EQUATION

STATION EQUATION
STA. 2142+34.37 BK =
STA. 2139+01.40 AH

EXCEPTION TO NET CENTERLINE LENGTH OF PROJECT 1023-05-75 (STRUCTURE B-27-60 OVER CTH O) STA. 2156+88.73 - STA. 2158+80.44 (PROJECT 1023-02-65)

STATION EQUATION
STA. 2438+72.91 BK =
STA. 2437+67.56 AH

EQUATION

EXCEPTION TO NET CENTERLINE LENGTH OF PROJECT 1023-05-75 (STRUCTURE B-41-63 OVER UNION PACIFIC RR) STA. 2451+35.56 - STA. 2454+08.24 (PROJECT 1023-02-65)

EXCEPTION TO NET CENTERLINE LENGTH OF PROJECT 1023-05-75 (STRUCTURE B-41-65 OVER ASPEN AVE.) STA. 2463+44.82 - STA. 2465+23.60 (PROJECT 1023-02-65)

EXCEPTION TO NET CENTERLINE LENGTH OF PROJECT 1023-05-75 (STRUCTURE B-41-67 OVER CTH EW) STA. 2547+91.17 - STA. 2549+35.25 (PROJECT 1023-02-65)

BEGIN PROJECT 1023-05-75
STA. 2140+00
Y = 60983.98
X = 140700.20

BEGIN PROJECT 1023-02-65
STA. 2144+30
Y = 60767.15
X = 141071.52

END PROJECT 1023-02-65
STA. 2549+35.25

END PROJECT 1023-05-75
STA. 2614+00

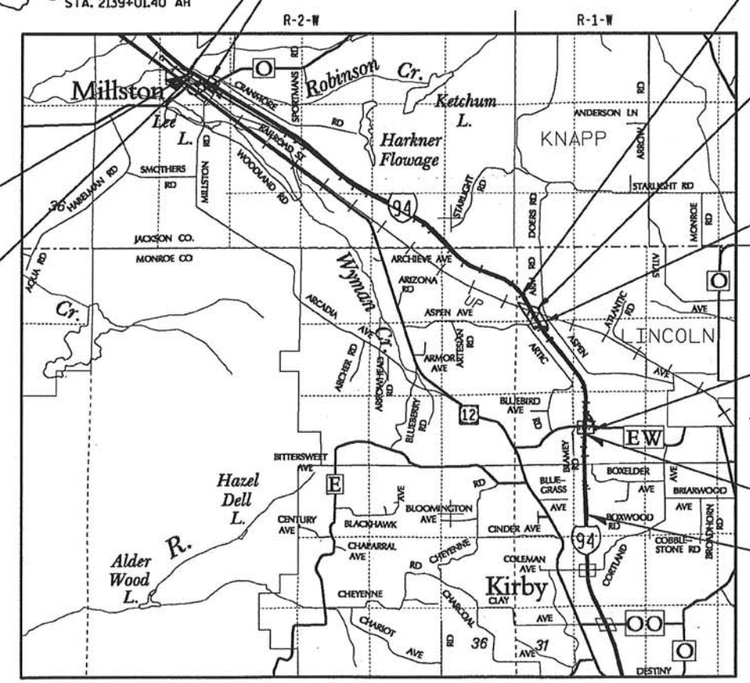

LAYOUT
SCALE 0 1 MI.

DESIGN DESIGNATION

A.A.D.T.	(2006)	=	32,000
A.A.D.T.	(2026)	=	46,000
D.H.V.		=	N/A
D.D.		=	N/A
T.		=	29.6%
DESIGN SPEED		=	70 MPH
ESALS		=	26,000,000

CONVENTIONAL SYMBOLS

COUNTY LINE
CORPORATE LIMITS
PROPERTY LINE
LOT LINE
LIMITED EASEMENT
EXISTING RIGHT OF WAY
NEW RIGHT OF WAY
REFERENCE LINE
SLOPE INTERCEPT
ORIGINAL GROUND
MARSH or ROCK PROFILE
CULVERT IN PLACE
CULVERT REQUIRED
CULVERTS REQUIRED (PROFILE)
COMBUSTIBLE FLUIDS — CAUTION
HIGH VOLTAGE TRANSMISSION LINE (69 kV AND HIGHER) — CAUTION

UNDERGROUND UTILITIES

GAS (SIZE) G
ELECTRIC E
TELEPHONE T
CABLE TV TV
WATER (SIZE) W
FIBER OPTIC FO
SANITARY SEWER (SIZE) SAN
OVERHEAD UTILITY OH
STORM SEWER (SIZE) SS
PIPELINE PIPL
POWER POLE
TELEPHONE POLE
POWER/TELEPHONE POLE
SERVICE PEDESTAL
WELL
SEPTIC TANK VENT
WOODED AREA
EXISTING SIGN
SATELLITE DISH
MAIL BOX

TOTAL NET LENGTH OF CENTERLINE B-27-60 = 0.036 MI
TOTAL NET LENGTH OF CENTERLINE B-41-63 = 0.052 MI.
TOTAL NET LENGTH OF CENTERLINE B-41-65 = 0.034 MI.
TOTAL NET LENGTH OF CENTERLINE B-41-67 = 0.027 MI.
TOTAL NET LENGTH OF CENTERLINE 1023-02-65 = 0.149 MI.
TOTAL NET LENGTH OF CENTERLINE 1023-05-75 = 8.911 MI.

Coordinates on this plan are referenced to the Wisconsin County Coordinate System (WCCS), Jackson County, Offical.

ORIGINAL PLANS PREPARED BY
EarthTech
A tyco International Ltd. Company

WISCONSIN PROFESSIONAL ENGINEER
THOMAS A. ZALEWSKI
E-26972
Madison
WI

8/5/08 (Date) (Signature)

STATE OF WISCONSIN
DEPARTMENT OF TRANSPORTATION

PREPARED BY

Surveyor	EARTH TECH, INC.
Designer	EARTH TECH, INC.
Project Manager	STACEY RUSCH
Regional Examiner	DAN OJIBWAY
Regional Supervisor	RICK SHERMO
C.O. Examiner	

APPROVED FOR THE DEPARTMENT
DATE: 8/5/08 (Signature)

E

2

GENERAL NOTES

COORDINATES AND BEARINGS SHOWN ON THIS PLAN ARE REFERENCED TO THE WISCONSIN COUNTY COORDINATE SYSTEM, JACKSON COUNTY, OFFICAL . ELEVATIONS ON THE PLAN ARE REFERENCED TO NAVD 88.

EXISTING CULVERT PIPE WITHIN THE CONSTRUCTION LIMITS THAT ARE TO BE REMOVED SHALL BE DIRECTED BY THE ENGINEER IN THE FIELD. ALL CULVERT PIPE REMOVED SHALL BECOME THE PROPERTY OF THE CONTRACTOR UNLESS OTHERWISE DIRECTED BY THE ENGINEER.

NO TREES OR SHRUBS ARE TO BE REMOVED WITHOUT APPROVAL OF THE ENGINEER. DISTURBED AREAS WITHIN THE RIGHT OF WAY, EXCEPT AREAS WITHIN THE FINISHED SHOULDER POINTS, SHALL BE FERTILIZED, SEEDED AND MULCHED.

ALL CONCRETE PIPES SHALL HAVE THE APRON ENDWALL AND FIRST TWO PIPE JOINTS TIED (3 TOTAL), INCIDENTAL TO THE COST OT THE PIPE.

THE LOCATIONS OF EXISTING UTILITY INSTALLATIONS AS SHOWN ON THE PLANS ARE APPROXIMATE. THERE MAY BE OTHER UTILITY INSTALLATIONS WITHIN THE PROJECT AREA THAT ARE NOT SHOWN.

EROSION CONTROL FEATURES AS SHOWN ON THE PLANS ARE SUGGESTED LOCATIONS. EXACT LOCATIONS WILL BE DETERMINED BY THE ENGINEER IN THE FIELD.

CROSS DRAIN PIPE ELEVATIONS, LENGTHS AND LOCATIONS AS SHOWN ON THE PLANS, SHALL BE ADJUSTED TO FIT THE EXISTING FIELD CONDITIONS, AS DIRECTED BY THE ENGINEER.

RADII, ELEVATIONS, AND DIMENSIONS ARE GIVEN AT THE PAVEMENT EDGE, UNLESS OTHERWISE NOTED IN THE PLANS.

INDIVIDUAL LAYER THICKNESSES WILL BE DETERMINED BY THE CONTRACTOR FOR THE HMA WARRANTED PAVEMENT, AS PER THE WARRANTY SPECIFICATION.

WARRANTED HMA PAVEMENT ANCILLARY LOCATIONS ARE DEFINED BY THE TYPICAL FINISHED SECTIONS AND DETAILS.

THE HMA PAVEMENT WEIGHT CALCULATIONS ARE BASED ON A UNIT WEIGHT OF 110 LBS/SY/IN.

ABBREVIATIONS

ASPH.	ASPHALTIC
℄ OR C.L.	CENTER LINE
C.A.B.C.	CRUSHED AGGREGATE BASE COURSE
C.E.	COMMERCIAL ENTRANCE
CONC.	CONCRETE
C.M.C.P.	CORRUGATED METAL CULVERT PIPE
C.M.P.	CORRUGATED METAL PIPE
C.P.	CULVERT PIPE
C.S.C.P.	CORRUGATED STEEL CULVERT PIPE
C.S.P.A.	CORRUGATED STEEL PIPE ARCH
DIA.	DIAMETER
EBS	EXCAVATION BELOW SUBGRADE
EXIST.	EXISTING
F.E.	FIELD ENTRANCE
F.L.	FLOW LINE
LC	LAND CONTRACT
L.H.F.	LEFT HAND FORWARD
HMA	HOT MIX ASPHALT
MED	MEDIAN
MIN.	MINIMUM
PAVT.	PAVEMENT
P.E.	PRIVATE ENTRANCE
P.L.	PROPERTY LINE
R.	RADIUS
R.C.C.P.	REINFORCE CONCRETE CULVERT PIPE
R.C.P.S.S.	REINFORCE CONCRETE PIPE STORM SEWER
R.L.	REFERENCE LINE
R.C.	REINFORCED CONCRETE
REQ'D.	REQUIRED
R.H.F.	RIGHT HAND FORWARD
R.R.	RAILROAD
R/W	RIGHT OF WAY
S.G.S.P.	SUBGRADE SHOULDER POINT
SHLDR.	SHOULDER
S.P.B.G.	STEEL PLATE BEAM GUARD
S.D.	SPECIAL DITCH
S.D.D.	STANDARD DETAIL DRAWING
STA.	STATION
T.L.E.	TEMPORARY LIMITED EASEMENT
TYP.	TYPICAL
V.C.	VERTICAL CURVE
VAR.	VARIES

UTILITIES

2

*AT&T
BILL KOENIG
P.O. BOX 244
LAKE MILLS WI 53551
608-628-0575
jmcl@charterinternet.com

*ALLIANT ENERGY CORPORATION
(ELECTRIC)
BRIAN PATRICK
528 INDUSTRIAL DRIVE
TOMAH, WI 54660
608-372-0340
brianpatrick@alliantenergy.com

*LEVEL 3
KEITH OSBORN
1025 ELDORADO BLVD
BROOMFIELD, CO 80021
720-888-2774
keith.osborn@level3.com

*SPRINT / NEXTEL
JIM BURTON
5600 NORTH RIVER ROAD
ROSEMONT, IL 60018
708-955-6659
james.m.burton@sprint.com

*VERIZON
JEFF TIMM
134 RACE STREET
EAU CLAIRE, WI 54703
715-834-9569 (OFFICE)
715-684-9011 (CELL)
jeff.timm@verizon.com

*VILLAGE OF WARRENS
DIRECTOR OF PUBLIC WORKS
DAVID BEKKUM
P.O. BOX 97
WARRENS, WI 54656
608-378-3418 (OFFICE)
608-343-7601 (CELL)
warrensdpw@centurytel.net

*CENTURYTEL OF MONROE COUNTY
(UNDERGROUND TELEPHONE AT CTH EW & ASPEN RD)
KEVIN O'LEARY
311 SOUTH COURT STREET
SPARTA, WI 5465666
608-269-0819
Kevin.oleary@centurytel.com

*CENTURYTEL OF CENTRAL WISCONSIN
(UNDERGROUND TELEPHONE AT CTH O)
DONNA SMOTHERS
835 RED IRON ROAD
BLACK RIVER FALLS, WI 54615
715-284-4375
donna.smothers@centurytel.com

* MEMBER OF DIGGERS HOTLINE

MEMBER ONE CALL SYSTEMS INTERNATIONAL

TO OBTAIN LOCATION OF PARTICIPANTS' UNDERGROUND FACILITIES BEFORE YOU DIG IN WISCONSIN

CALL DIGGERS HOTLINE
1-800-242-8511
TOLL FREE
FAX-A-LOCATE 1-800-338-3860
TDD (FOR HEARING IMPAIRED) 1-800-542-2289

WIS. STATUTE 182.0175 (1974)
REQUIRES MIN. OF 3 WORK DAYS
NOTICE BEFORE YOU EXCAVATE.

DESIGNER CONTACT

TOM ZALEWSKI, PE
EARTH TECH, INC.
1210 FOURIER DRIVE
MADISON, WI 53717
608-828-8145
tom.zalewski@earthtech.com

WISCONSIN DEPARTMENT OF NATURAL RESOURCES (WDNR)

NICK SHAFF
1300 W. CLAIREMONT AVENUE
EAU CLAIRE, WI 54702
715-839-3700

UNION PACIFIC RAILROAD COMPANY

JOHN VENICE
301 W. LAKE STREET
NORTHLAKE, IL 60164
708-649-5210 (PHONE)
402-233-2769 (FAX)
jnvenice@up.com

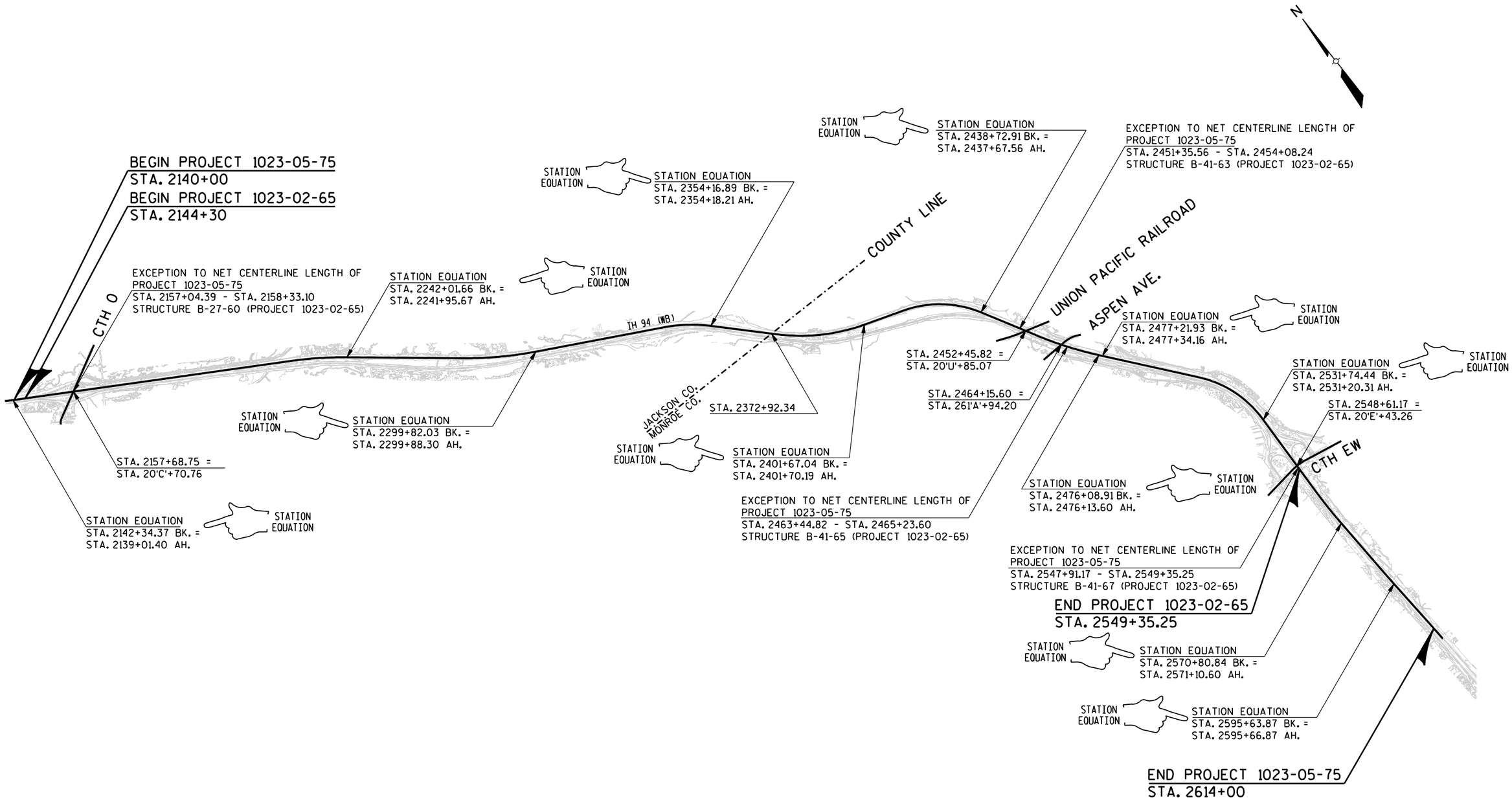

PROJECT NO.: 1023-05-75 & 1023-02-65	HWY: IH 94	COUNTY: JACKSON & MONROE	PROJECT OVERVIEW	SHEET 3	E

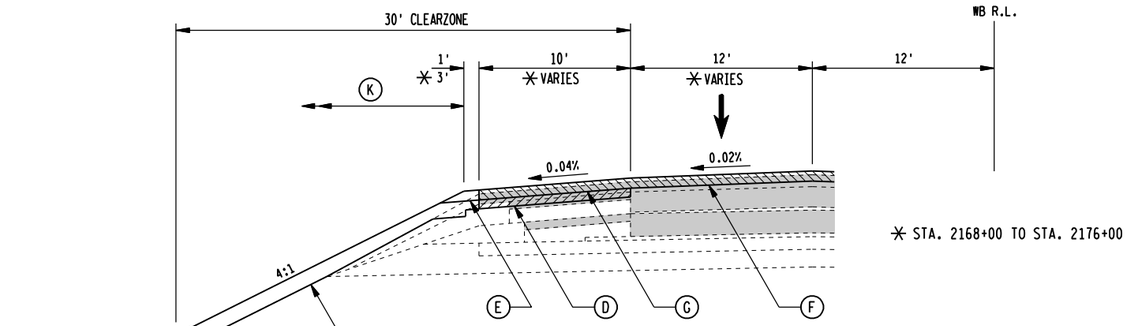

* STA. 2168+00 TO STA. 2176+00

TYPICAL FINISHED HALF-SECTION

IH 94 (WB)
STA. 2168+00.00 TO STA. 2181+25.00 (AT CTH O)
STA. 2431+36.00 TO STA. 2438+00.00 (AT UP RR & ASPEN AVE.)
STA. 2479+63.52 TO STA. 2487+34.00 (AT UP RR & ASPEN AVE.)
STA. 2568+51.72 TO STA. 2576+51.00 (AT CTH EW)

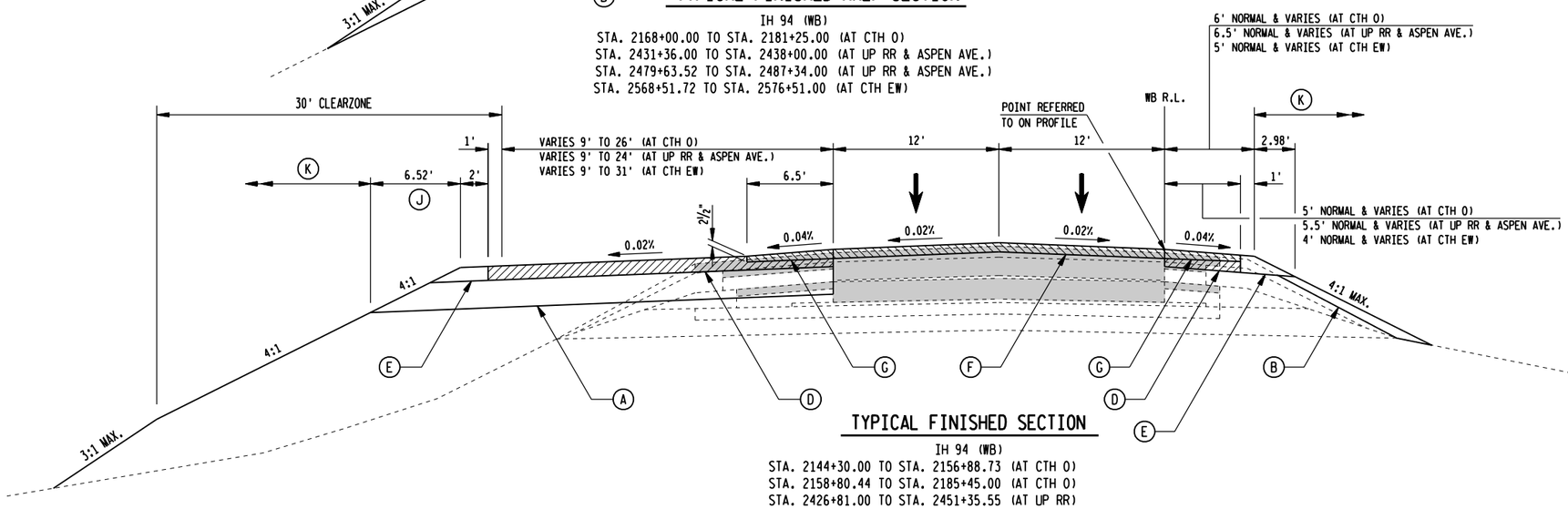

TYPICAL FINISHED SECTION

IH 94 (WB)
STA. 2144+30.00 TO STA. 2156+88.73 (AT CTH O)
STA. 2158+80.44 TO STA. 2185+45.00 (AT CTH O)
STA. 2426+81.00 TO STA. 2451+35.55 (AT UP RR)
STA. 2454+08.24 TO STA. 2463+44.82 (AT UP RR & ASPEN AVE.)
STA. 2465+23.60 TO STA. 2491+89.00 (AT ASPEN AVE.)
STA. 2528+47.00 TO STA. 2580+01.00 (AT CTH EW)

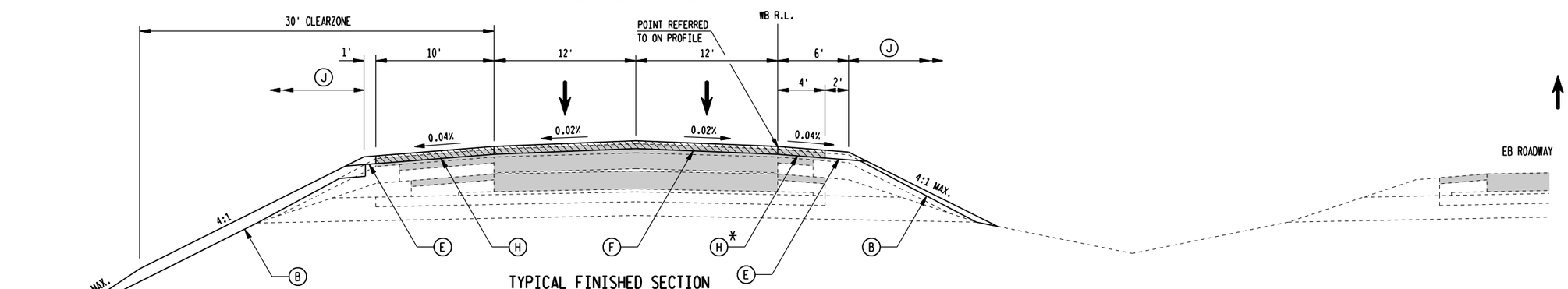

TYPICAL FINISHED SECTION

IH 94 (WB)
STA. 2140+00.00 TO STA. 2144+30.00
STA. 2185+45.00 TO STA. 2426+81.00
STA. 2491+89.00 TO STA. 2614+00.00
(SEE HALF-SECTION ABOVE FOR EXCEPTIONS)

* PAID FOR AS HMA PAVEMENT ANCILLARY EVEN IF PAVED WITH MAINLINE PAVEMENT.

LEGEND

- (A) BASE AGGREGATE DENSE 1 1/4-INCH (12-INCH DEPTH)
- (B) BASE AGGREGATE DENSE 1 1/4-INCH (DEPTH VARIES)
- (C) 4-INCHES WARRANTED HMA PAVEMENT ANCILLARY
- (D) 6-INCHES WARRANTED HMA PAVEMENT ANCILLARY
- (E) BASE AGGREGATE DENSE 3/4-INCH (DEPTH OF ADJACENT PAVEMENT)
- (F) MILL EXISTING ASPHALTIC CONCRETE PAVEMENT 2 1/2-INCHES AND REPLACE WITH 4-INCHES WARRANTED HMA PAVEMENT MAINLINE
- (G) MILL WARRANTED HMA PAVEMENT 2 1/2-INCHES AND REPLACE WITH 4-INCHES WARRANTED HMA PAVEMENT ANCILLARY
- (H) MILL EXISTING ASPHALTIC CONCRETE PAVEMENT 2 1/2-INCHES AND REPLACE WITH 4-INCHES WARRANTED HMA PAVEMENT ANCILLARY
- (I) MILL WARRANTED HMA PAVEMENT 2-INCHES AND REPLACE WITH A VARYING THICKNESS (4-INCH MIN.) WARRANTED HMA PAVEMENT ANCILLARY. SEE OVERLAP JOINT, BUTTED DETAIL.
- (J) SEED AND FERTILIZE
- (K) 6" SALVAGED TOPSOIL, SEED, FERTILIZE & MULCH
- (L) MILL EXISTING ASPHALTIC CONCRETE PAVEMENT 2-INCHES AND REPLACE WITH A VARYING THICKNESS WARRANTED HMA PAVEMENT MAINLINE, OR HMA PAVEMENT ANCILLARY WITHIN 50'OF APPROACH SLAB. SEE OVERLAP JOINT, BUTTED DETAIL.
- (M) TEMPORARY PAVEMENT MARKING 4-INCH (WHITE EDGELINE)
- (N) TEMPORARY PAVEMENT MARKING 4-INCH (WHITE DASHES)
- (O) TEMPORARY PAVEMENT MARKING 4-INCH (YELLOW EDGELINE)
- (P) 3-INCHES WARRANTED HMA PAVEMENT ANCILLARY
- EXISTING PAVEMENT (SEE TYPICAL EXISTING SECTION)
- NEW PAVEMENT

NOTE:
SEE CROSS SECTIONS FOR CROSS SLOPES IN SUPERELEVATION.

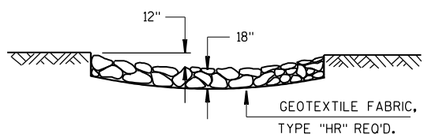

SECTION A-A

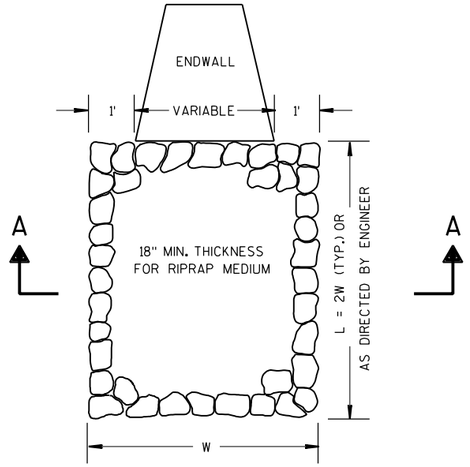

RIPRAP MEDIUM TREATMENT AT CULVERTS

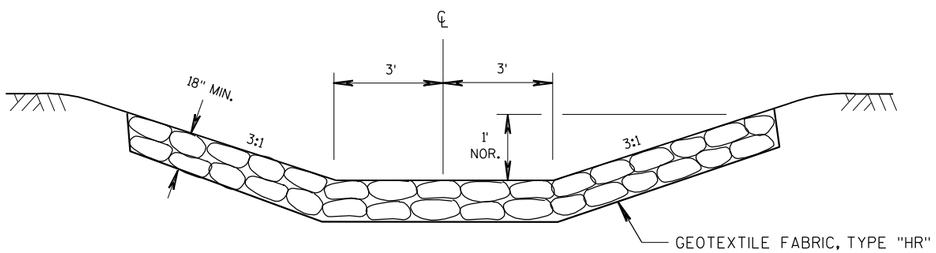

RIPRAP MEDIUM FLUME WITH
GEOTEXTILE FABRIC

STA. 2548+90 - STA. 2550+25 LT
STA. 2554+74 LT
STA. 2557+45 LT

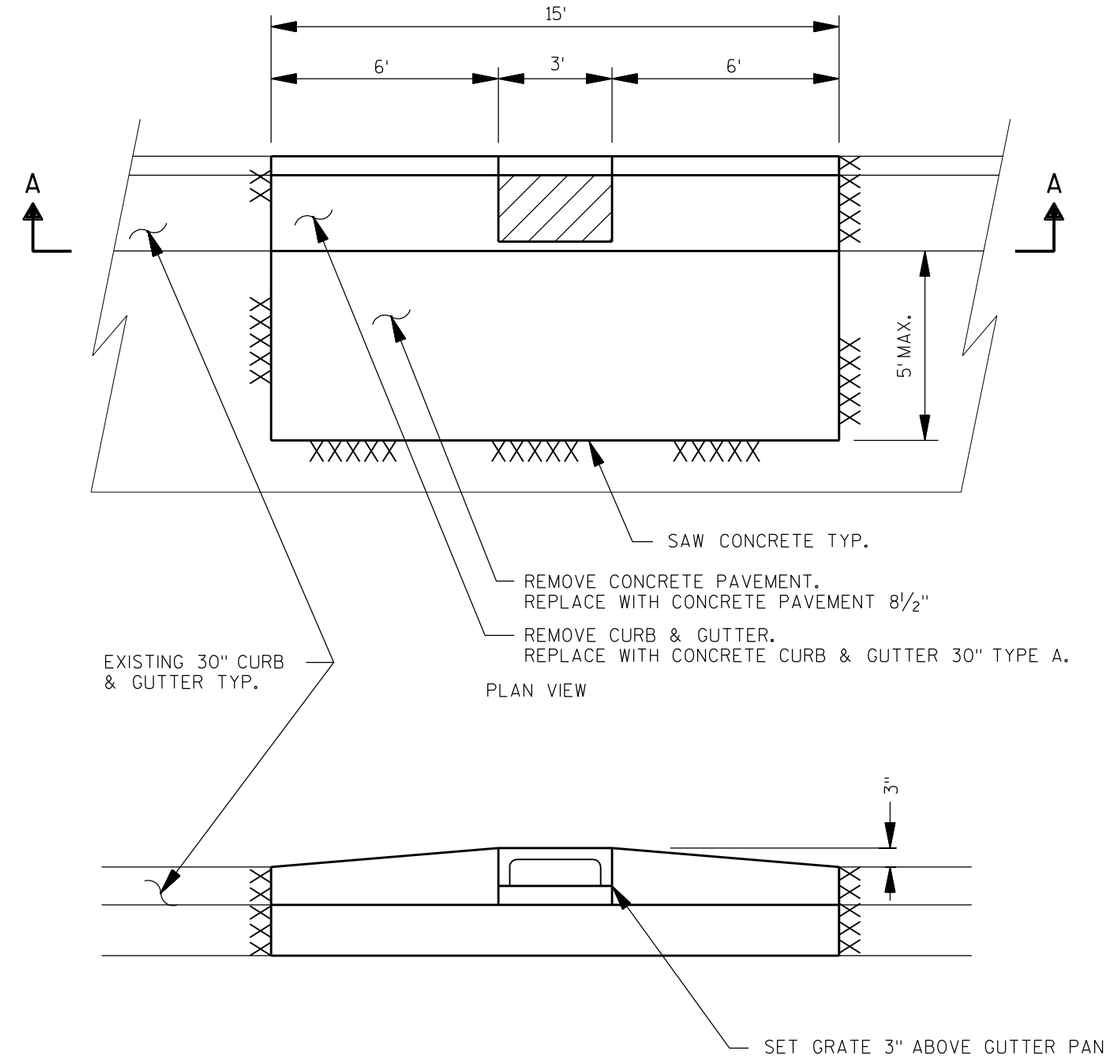

SECTION A-A

CURB & GUTTER AT INLET REPLACEMENTS

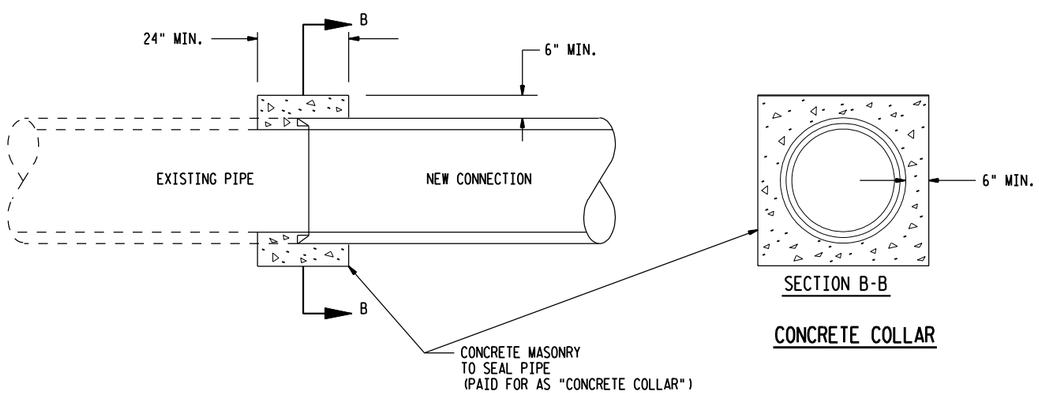

SECTION B-B

CONCRETE COLLAR

2

CURVE DATA
PI = 2149'B'+22.39
Y = 60560.41
X = 141520.75
PC = 2147'B'+72.12
PT = 2150'B'+71.56
DELTA = 11°58'39"
D = 4°00'00"
T = 150.27'
L = 299.44'
R = 1432.39'

CURVE DATA
PI = 2157'B'+28.44
Y = 60322.39
X = 142292.00
PC = 2156'B'+20.99
PT = 2158'B'+34.66
DELTA = 14°57'25"
D = 7°00'00"
T = 107.45'
L = 213.67'
R = 818.51'

CURVE DATA
PI = 2167'D'+94.61
Y = 59609.06
X = 143132.45
PC = 2166'D'+59.10
PT = 2169'D'+29.32
DELTA = 10°48'32"
D = 4°00'00"
T = 135.51'
L = 270.22'
R = 1432.39'

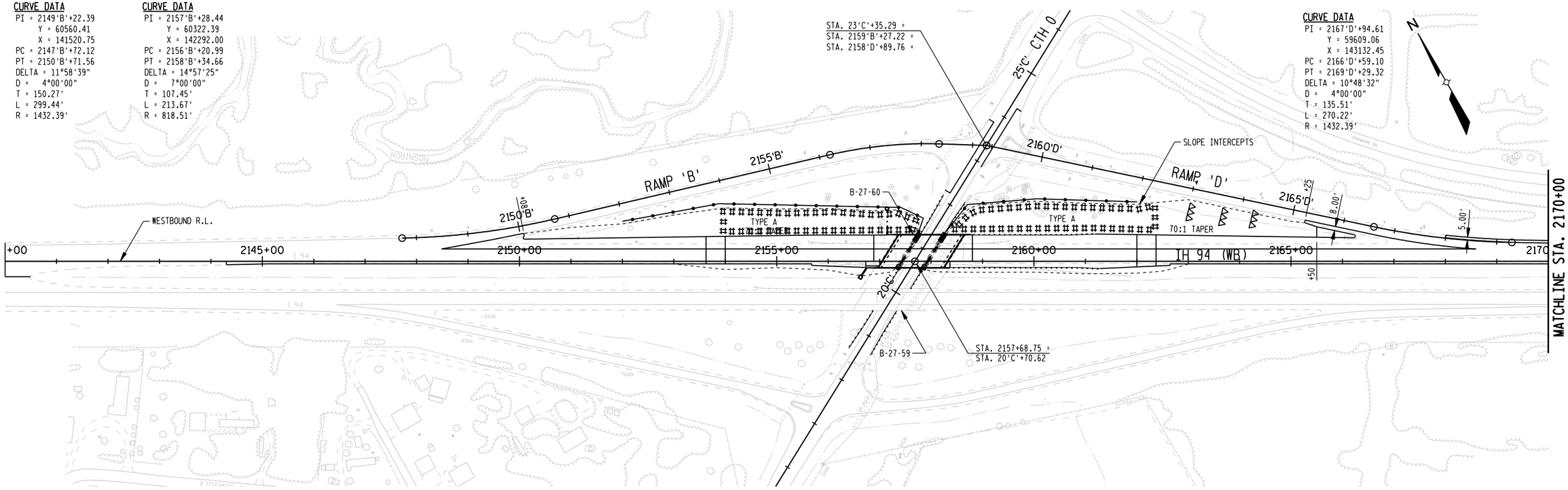

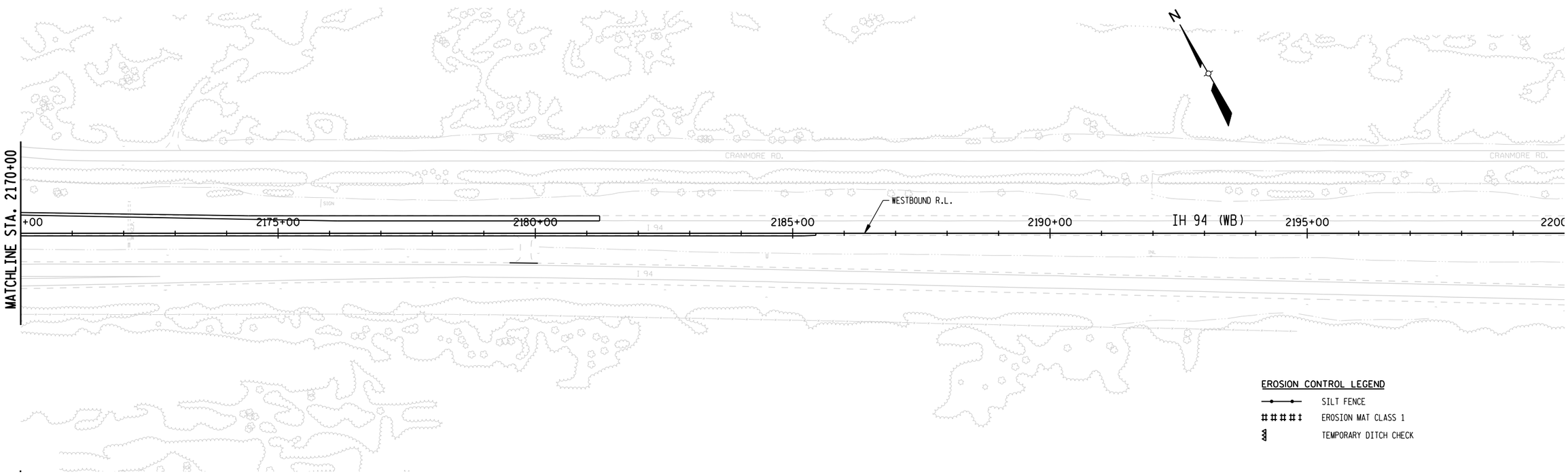

EROSION CONTROL LEGEND

- SILT FENCE
- EROSION MAT CLASS 1
- TEMPORARY DITCH CHECK

PROJECT NO.: 1023-05-75 & 1023-02-65	HWY: IH 94	COUNTY: JACKSON & MONROE	EROSION CONTROL PLANS	SHEET 17	E

2

CURVE DATA
PI = 2388+39.65
Y = 47150.85
X = 161163.57
PC = 2374+60.79
PT = 2401+67.04
DELTA = - 27°03'45.30"
D = 01°00'00.00"
T = 1378.86'
L = 2706.26'
R = 5729.58'
SE = 0.028%
RO = 200'

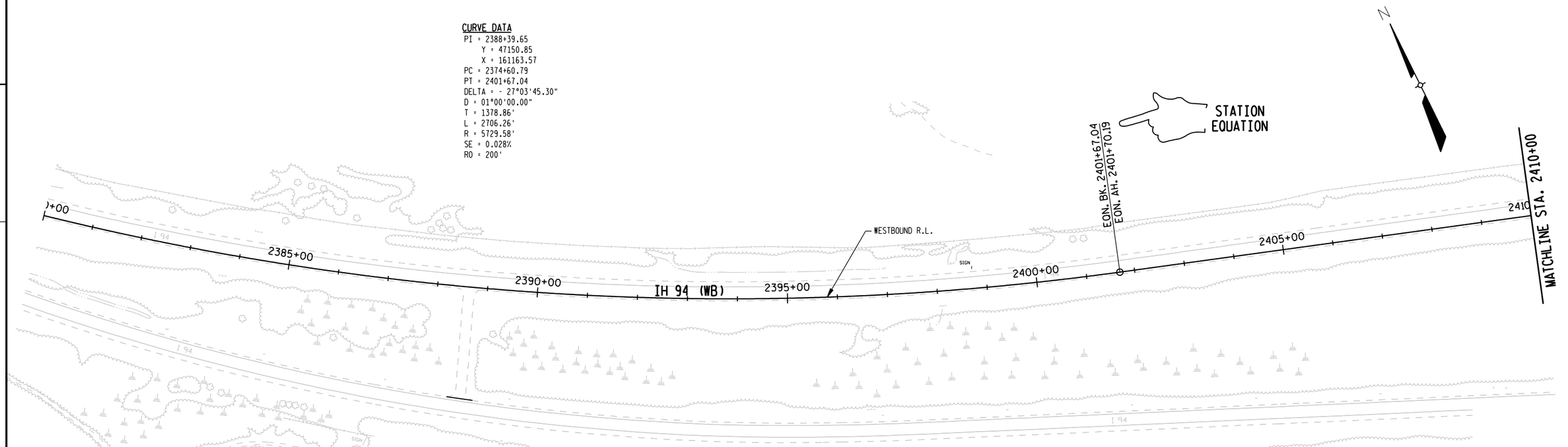

2

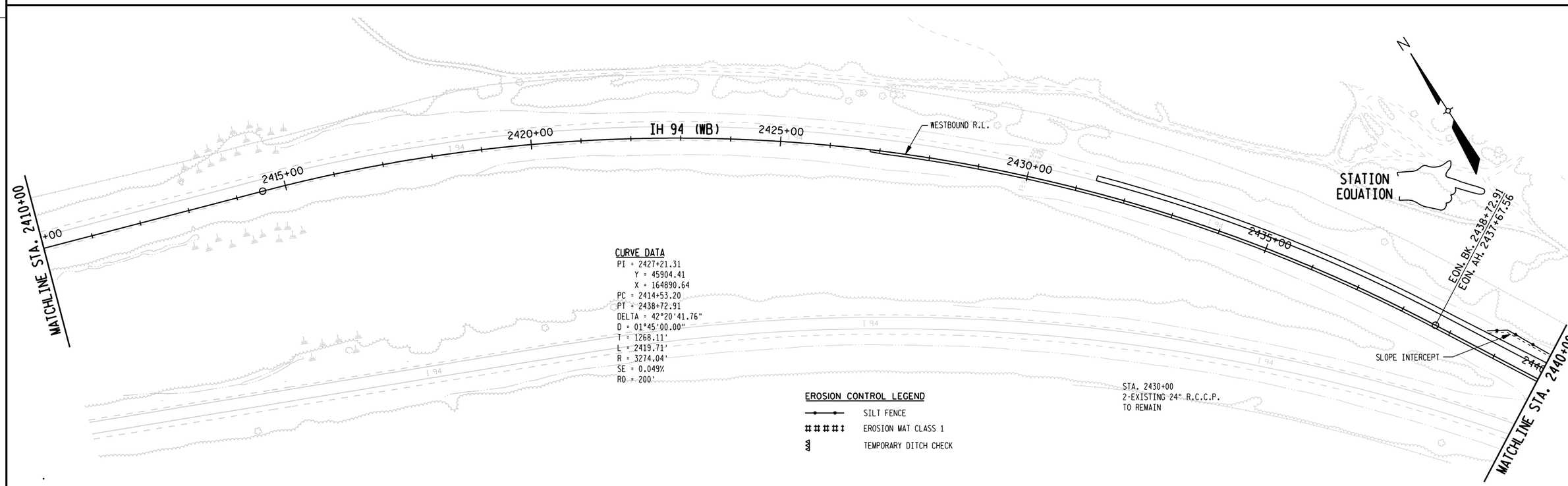

CURVE DATA
PI = 2427+21.31
Y = 45904.41
X = 164890.64
PC = 2414+53.20
PT = 2438+72.91
DELTA = 42°20'41.76"
D = 01°45'00.00"
T = 1268.11'
L = 2419.71'
R = 3274.04'
SE = 0.049%
RO = 200'

STA. 2430+00
2-EXISTING 24" R.C.C.P.
TO REMAIN

EROSION CONTROL LEGEND

—•—•—	SILT FENCE
# # # # #	EROSION MAT CLASS 1
	TEMPORARY DITCH CHECK

PROJECT NO.: 1023-05-75 & 1023-02-65	HWY: IH 94	COUNTY: JACKSON & MONROE	EROSION CONTROL PLANS	SHEET 18	E

2

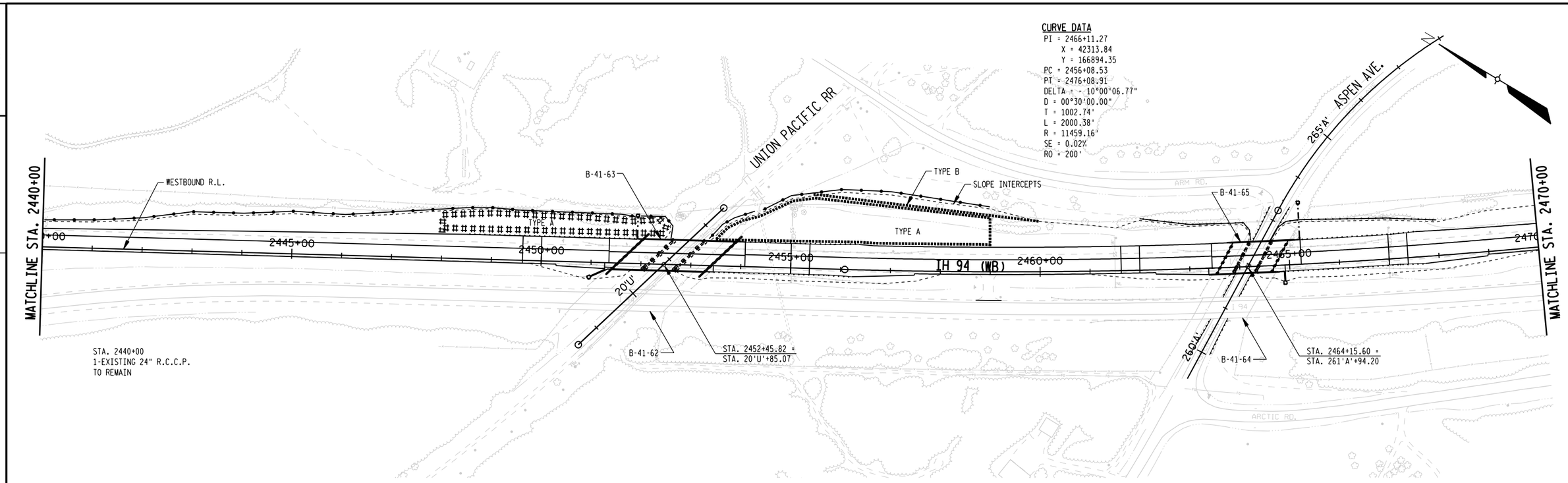

2

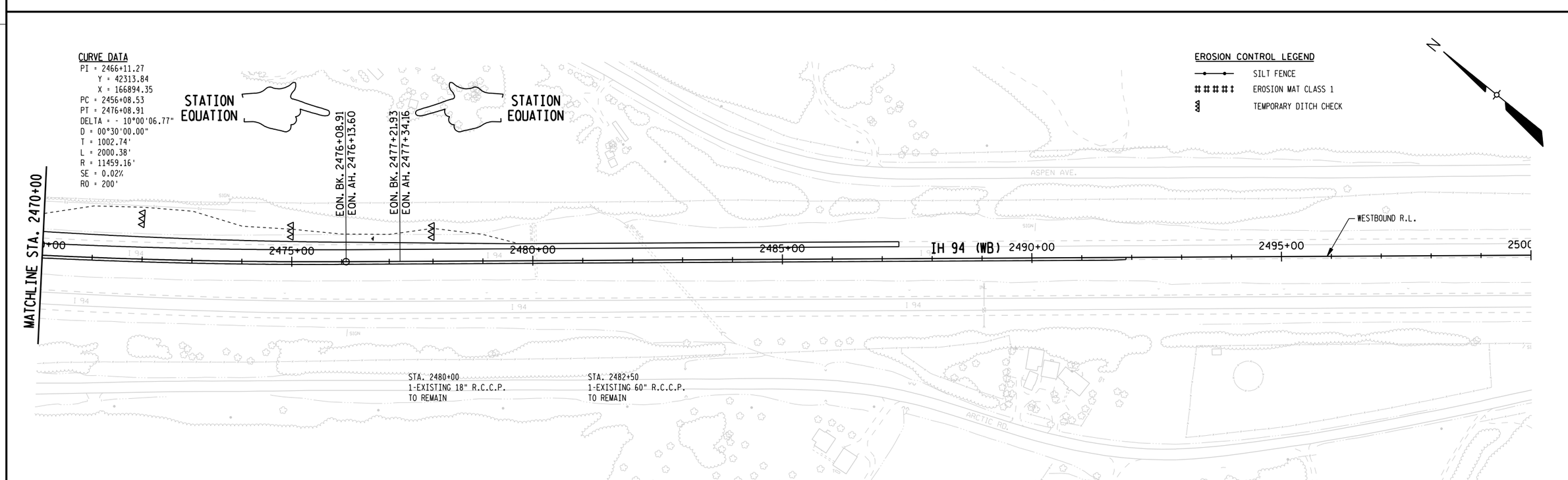

PROJECT NO.: 1023-05-75 & 1023-02-65	HWY: IH 94	COUNTY: JACKSON & MONROE	EROSION CONTROL PLANS	SHEET 19	E

2

CURVE DATA
PI = 37'K'+92.84
Y = 36190.54
X = 170264.64
PC = 34'K'+81.94
PT = 40'K'+72.47
DELTA = 44°17'22"
D = 7°30'00"
T = 310.90'
L = 590.53'
R = 763.95'

CURVE DATA
PI = 45'K'+22.41
Y = 35627.54
X = 170776.40
PC = 43'K'+43.04
PT = 46'K'+83.73
DELTA = 44°17'22"
D = 13°00'00"
T = 179.37'
L = 340.69'
R = 440.74'

STA. 46'K'+49, RT.
STA. 39'J'+52, LT.
STA. 44'J'+03, LT.
REMOVE INLET
1-INLET TYPE 3-H REQUIRED
(SEE DETAIL)

STA. 2554+70, LT.
STA. 2557+44, LT.
RIPRAP FLUME REQUIRED
(SEE DETAIL)

EROSION CONTROL LEGEND

SILT FENCE
EROSION MAT CLASS 1
TEMPORARY DITCH CHECK

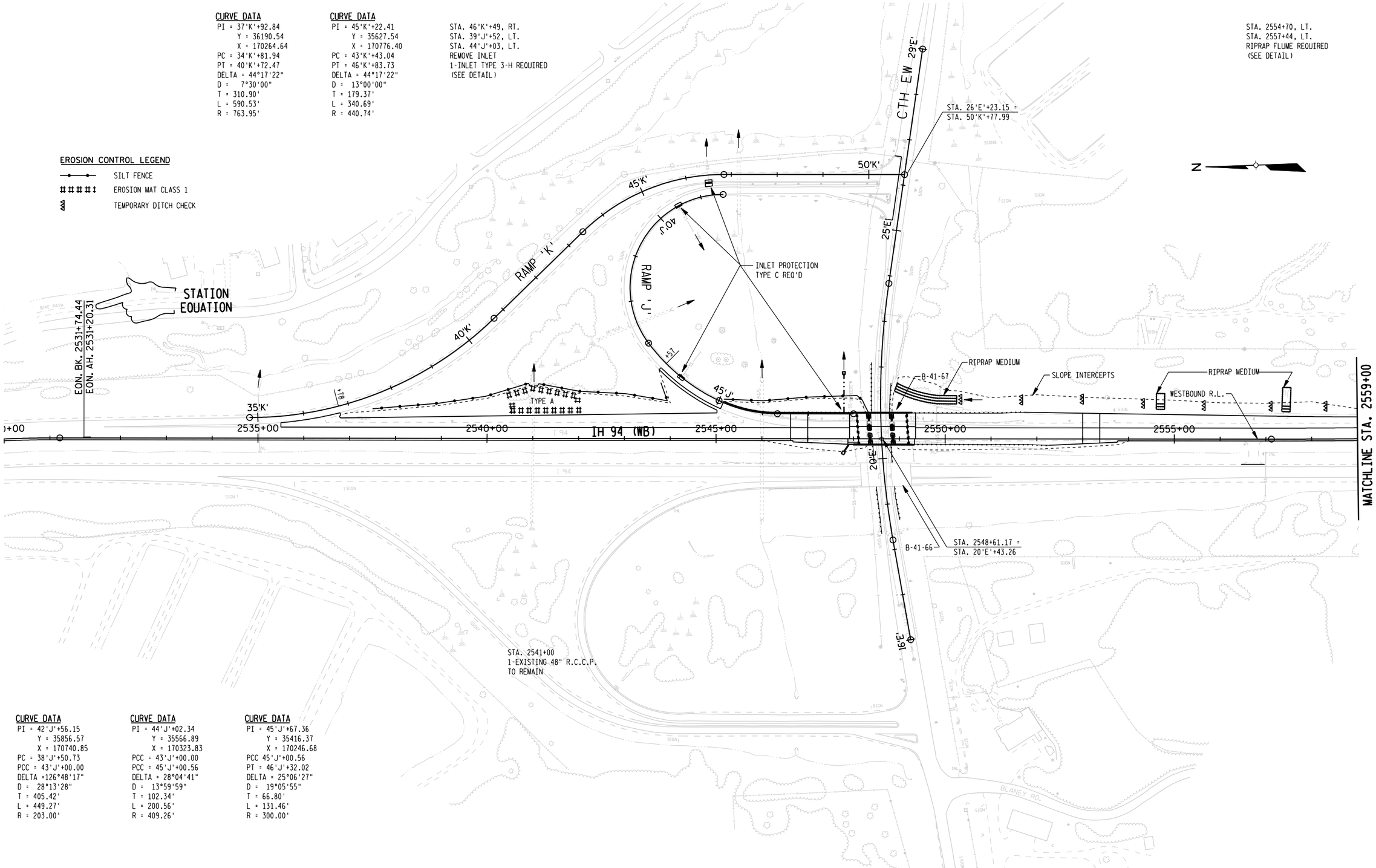

CURVE DATA
PI = 42'J'+56.15
Y = 35856.57
X = 170740.85
PC = 38'J'+50.73
PCC = 43'J'+00.00
DELTA =126°48'17"
D = 28°13'28"
T = 405.42'
L = 449.27'
R = 203.00'

CURVE DATA
PI = 44'J'+02.34
Y = 35566.89
X = 170323.83
PCC = 43'J'+00.00
PCC = 45'J'+00.56
DELTA = 28°04'41"
D = 13°59'59"
T = 102.34'
L = 200.56'
R = 409.26'

CURVE DATA
PI = 45'J'+67.36
Y = 35416.37
X = 170246.68
PCC 45'J'+00.56
PT = 46'J'+32.02
DELTA = 25°06'27"
D = 19°05'55"
T = 66.80'
L = 131.46'
R = 300.00'

PROJECT NO.: 1023-05-75 & 1023-02-65	HWY: IH 94	COUNTY: JACKSON & MONROE	EROSION CONTROL PLANS	SHEET 20	E

2

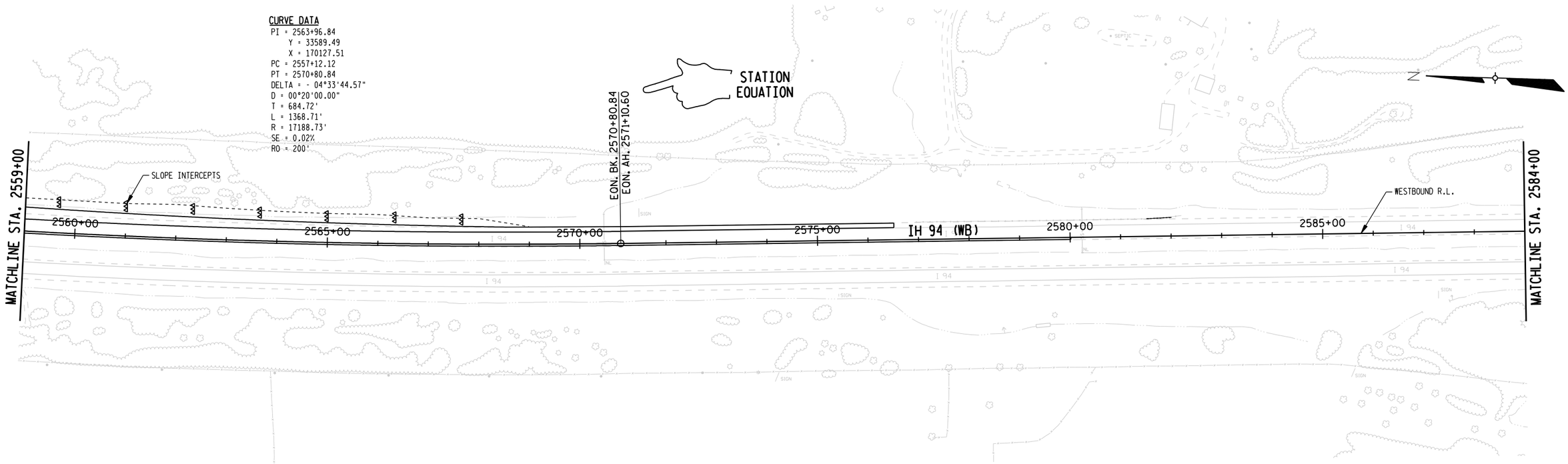

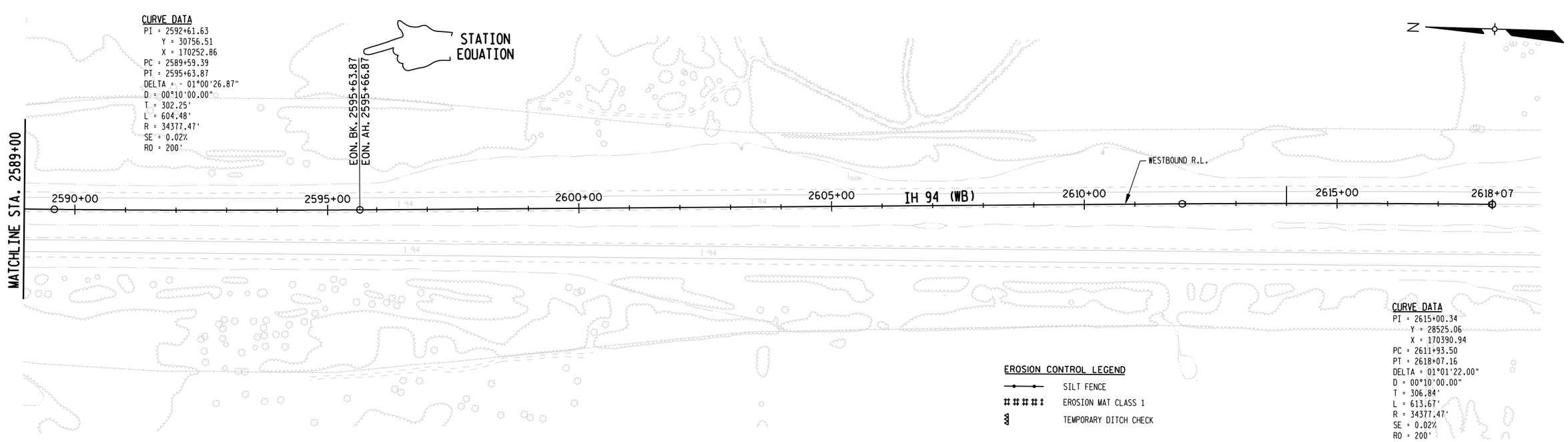

2

PROJECT NO.: 1023-05-75 & 1023-02-65	HWY: IH 94	COUNTY: JACKSON & MONROE	EROSION CONTROL PLANS	SHEET 21	E

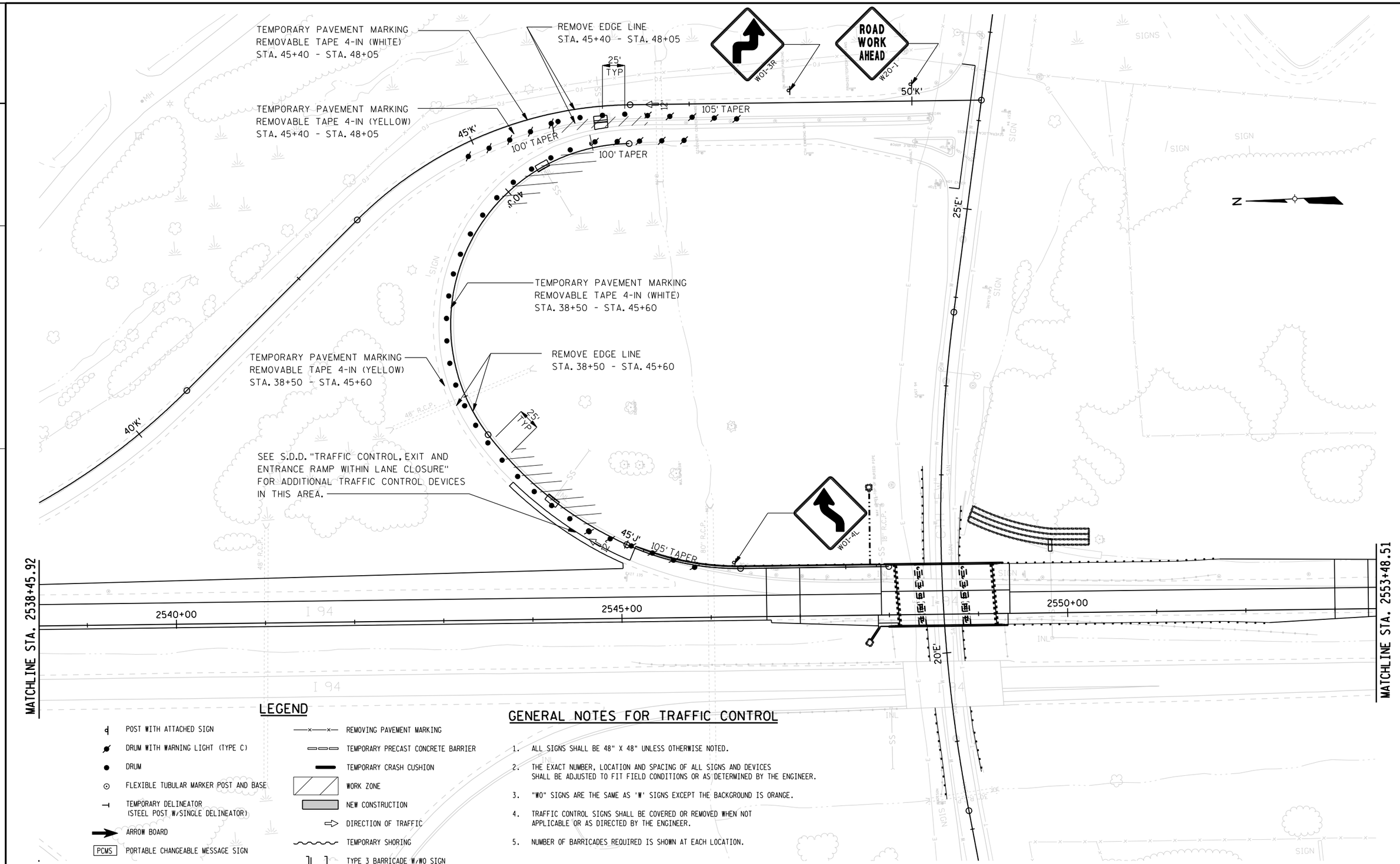

LEGEND

- POST WITH ATTACHED SIGN
- DRUM WITH WARNING LIGHT (TYPE C)
- DRUM
- FLEXIBLE TUBULAR MARKER POST AND BASE
- TEMPORARY DELINEATOR (STEEL POST W/SINGLE DELINEATOR)
- ARROW BOARD
- PCMS — PORTABLE CHANGEABLE MESSAGE SIGN
- REMOVING PAVEMENT MARKING
- TEMPORARY PRECAST CONCRETE BARRIER
- TEMPORARY CRASH CUSHION
- WORK ZONE
- NEW CONSTRUCTION
- DIRECTION OF TRAFFIC
- TEMPORARY SHORING
- TYPE 3 BARRICADE W/WO SIGN

GENERAL NOTES FOR TRAFFIC CONTROL

1. ALL SIGNS SHALL BE 48" X 48" UNLESS OTHERWISE NOTED.
2. THE EXACT NUMBER, LOCATION AND SPACING OF ALL SIGNS AND DEVICES SHALL BE ADJUSTED TO FIT FIELD CONDITIONS OR AS DETERMINED BY THE ENGINEER.
3. "WO" SIGNS ARE THE SAME AS 'W' SIGNS EXCEPT THE BACKGROUND IS ORANGE.
4. TRAFFIC CONTROL SIGNS SHALL BE COVERED OR REMOVED WHEN NOT APPLICABLE OR AS DIRECTED BY THE ENGINEER.
5. NUMBER OF BARRICADES REQUIRED IS SHOWN AT EACH LOCATION.

PROJECT NO.: 1023-05-75 & 1023-02-65	HWY: IH 94	COUNTY: JACKSON & MONROE	TRAFFIC CONTROL - INLET REPLACEMENT ON RAMPS	SHEET 104	E

3

DATE 22SEP08 E S T I M A T E O F Q U A N T I T I E S

LINE NUMBER	ITEM	ITEM DESCRIPTION	UNIT	TOTAL	1023-02-65 QUANTITY	1023-05-75 QUANTITY
0010	201.0105	CLEARING	STA	11.000	11.000	
0020	201.0205	GRUBBING	STA	11.000	11.000	
0030	203.0100	REMOVING SMALL PIPE CULVERTS	EACH	3.000	3.000	
0040	203.0200	REMOVING OLD STRUCTURE (STATION) 01. 2157+68.75	LS	1.000	1.000	
0050	203.0200	REMOVING OLD STRUCTURE (STATION) 02. 2452+47.07	LS	1.000	1.000	
0060	203.0200	REMOVING OLD STRUCTURE (STATION) 03. 2464+15.60	LS	1.000	1.000	
0070	203.0200	REMOVING OLD STRUCTURE (STATION) 04. 2548+61.17	LS	1.000	1.000	
0080	203.0225.S	DEBRIS CONTAINMENT (STRUCTURE) 01. B-27-60	LS	1.000	1.000	
0090	203.0225.S	DEBRIS CONTAINMENT (STRUCTURE) 03. B-41-65	LS	1.000	1.000	
0100	203.0225.S	DEBRIS CONTAINMENT (STRUCTURE) 04. B-41-67	LS	1.000	1.000	
0110	204.0100	REMOVING PAVEMENT	SY	1,939.000	1,901.000	38.000
0120	204.0105	REMOVING PAVEMENT BUTT JOINTS	SY	1,240.000		1,240.000
0130	204.0110	REMOVING ASPHALTIC SURFACE	SY	215.000	215.000	
0140	204.0115	REMOVING ASPHALTIC SURFACE BUTT JOINTS	SY	3,870.000	1,950.000	1,920.000
0150	204.0120	REMOVING ASPHALTIC SURFACE MILLING	SY	214,070.000	15,000.000	199,070.000
0160	204.0150	REMOVING CURB & GUTTER	LF	95.000		95.000
0170	204.0165	REMOVING GUARDRAIL	LF	5,312.000	5,248.000	64.000
0180	204.0190	REMOVING SURFACE DRAINS	EACH	2.000	2.000	
0190	204.0220	REMOVING INLETS	EACH	4.000		4.000
0200	205.0100	EXCAVATION COMMON	CY	12,181.000	12,181.000	
0210	205.0200	EXCAVATION ROCK	CY	294.000	294.000	
0220	206.1000	EXCAVATION FOR STRUCTURES BRIDGES (STRUCTURE) 01. B-27-60	LS	1.000	1.000	
0230	206.1000	EXCAVATION FOR STRUCTURES BRIDGES (STRUCTURE) 02. B-41-63	LS	1.000	1.000	
0240	206.1000	EXCAVATION FOR STRUCTURES BRIDGES (STRUCTURE) 03. B-41-65	LS	1.000	1.000	
0250	206.1000	EXCAVATION FOR STRUCTURES BRIDGES (STRUCTURE) 04. B-41-67	LS	1.000	1.000	
0260	206.6000.S	TEMPORARY SHORING	SF	10,940.000	10,940.000	
0270	208.0100	BORROW	CY	15,288.000	15,288.000	
0280	210.0100	BACKFILL STRUCTURE	CY	1,140.000	1,140.000	
0290	211.0100	PREPARE FOUNDATION FOR ASPHALTIC PAVING (PROJECT) 01. 1023-05-75	LS	1.000		1.000
0300	213.0100	FINISHING ROADWAY (PROJECT) 01. 1023-05-75	EACH	1.000		1.000
0310	305.0110	BASE AGGREGATE DENSE 3/4-INCH	TON	19,950.000	10,370.000	9,580.000
0320	305.0120	BASE AGGREGATE DENSE 1 1/4-INCH	TON	26,580.000	26,580.000	
0330	305.0500	SHAPING SHOULDERS	STA	1,082.000	152.000	930.000
0340	320.0165	CONCRETE BASE 10-INCH	SY	136.000	136.000	
0350	415.0085	CONCRETE PAVEMENT 8 1/2-INCH	SY	197.000	172.000	25.000
0360	415.2000.S	INCENTIVE STRENGTH CONCRETE PAVEMENT	DOL	2,375.000	525.000	1,850.000
0370	416.0050	CONCRETE PAVEMENT APPROACH SLAB	SY	1,405.000	1,405.000	
0380	416.1010	CONCRETE SURFACE DRAINS	CY	17.000	17.000	
0390	440.4410.S	INCENTIVE IRI RIDE	DOL	36,000.000		36,000.000
0400	460.1905.S	WARRANTED HMA PAVEMENT MAINLINE	TON	28,530.000	700.000	27,830.000
0410	460.1955.S	WARRANTED HMA PAVEMENT ANCILLARY	TON	34,030.000	12,560.000	21,470.000
0420	465.0125	ASPHALTIC SURFACE TEMPORARY	TON	102.000		102.000
0430	465.0400	ASPHALTIC SHOULDER RUMBLE STRIP	LF	93,240.000		93,240.000

3

DATE 22SEP08 E S T I M A T E O F Q U A N T I T I E S

LINE NUMBER	ITEM	ITEM DESCRIPTION	UNIT	TOTAL	1023-02-65 QUANTITY	1023-05-75 QUANTITY
0440	502.0100	CONCRETE MASONRY BRIDGES	CY	2,515.000	2,515.000	
0450	502.0400.S	INCENTIVE STRENGTH CONCRETE STRUCTURES	DOL	15,090.000	15,090.000	
0460	502.5010	MASONRY ANCHORS TYPE L NO. 6 BARS	EACH	274.000	274.000	
0470	502.5025	MASONRY ANCHORS TYPE L NO. 9 BARS	EACH	32.000	32.000	
0480	502.6105	MASONRY ANCHORS TYPE S 5/8-INCH	EACH	764.000	764.000	
0490	502.6110	MASONRY ANCHORS TYPE S 3/4-INCH	EACH	176.000	176.000	
0500	502.6115	MASONRY ANCHORS TYPE S 7/8-INCH	EACH	118.000	118.000	
0510	503.0136	PRESTRESSED GIRDER TYPE I 36-INCH	LF	748.000	748.000	
0520	505.0405	BAR STEEL REINFORCEMENT HS BRIDGES	LB	87,424.000	87,424.000	
0530	505.0605	BAR STEEL REINFORCEMENT HS COATED BRIDGES	LB	412,255.000	412,255.000	
0540	505.0904	BAR COUPLERS NO. 4	EACH	192.000	192.000	
0550	505.0905	BAR COUPLERS NO. 5	EACH	699.000	699.000	
0560	505.0906	BAR COUPLERS NO. 6	EACH	56.000	56.000	
0570	505.0908	BAR COUPLERS NO. 8	EACH	24.000	24.000	
0580	505.0909	BAR COUPLERS NO. 9	EACH	24.000	24.000	
0590	506.0105	STRUCTURAL STEEL CARBON	LB	11,460.000	11,460.000	
0600	506.0605	STRUCTURAL STEEL HS	LB	40,670.000	40,670.000	
0610	506.2605	BEARING PADS ELASTOMERIC NON-LAMINATED	EACH	16.000	16.000	
0620	506.3005	WELDED STUD SHEAR CONNECTORS 7/8X4-INCH	EACH	384.000	384.000	
0630	506.3010	WELDED STUD SHEAR CONNECTORS 7/8X5-INCH	EACH	384.000	384.000	
0640	506.3015	WELDED STUD SHEAR CONNECTORS 7/8X6-INCH	EACH	256.000	256.000	
0650	506.4000	STEEL DIAPHRAGMS (STRUCTURE) 01. B-41-63	EACH	30.000	30.000	
0660	506.5000	BEARING ASSEMBLIES FIXED (STRUCTURE) 01. B-27-60	EACH	6.000	6.000	
0670	506.6000	BEARING ASSEMBLIES EXPANSION (STRUCTURE) 01. B-27-60	EACH	6.000	6.000	
0680	506.7000.S	BEARING REPLACEMENT (STRUCTURE) 01. B-27-60	EACH	20.000	20.000	
0690	509.1500	CONCRETE SURFACE REPAIR	SF	40.000	40.000	
0700	511.2105	PILING STEEL DELIVERED AND DRIVEN HP 10-INCH X 42 LB	LF	824.000	824.000	
0710	516.0500	RUBBERIZED MEMBRANE WATERPROOFING	SY	57.000	57.000	
0720	517.0600	PAINTING EPOXY SYSTEM (STRUCTURE) 01. B-27-60	LS	1.000	1.000	
0730	517.0900.S	PREPARATION AND COATING OF TOP FLANGES	LS	1.000	1.000	
0740	520.1012	APRON ENDWALLS FOR CULVERT PIPE 12-INCH	EACH	4.000	4.000	
0750	520.8000.S	CULVERT PIPE CONCRETE COLLAR	EACH	11.000	8.000	3.000
0760	522.0112	CULVERT PIPE REINFORCED CONCRETE CLASS III 12-INCH	LF	12.000		12.000
0770	522.0118	CULVERT PIPE REINFORCED CONCRETE CLASS III 18-INCH	LF	52.000	52.000	
0780	524.0618	APRON ENDWALLS FOR CULVERT PIPE SALVAGED 18-INCH	EACH	4.000	4.000	
0790	601.0409	CONCRETE CURB & GUTTER 30-INCH TYPE A	LF	95.000		95.000
0800	601.0553	CONCRETE CURB AND GUTTER 4-INCH SLOPED 36-INCH TYPE D	LF	283.000	283.000	
0810	603.0500	CONCRETE BARRIER TEMPORARY PRECAST CONTRACTOR FURNISHED & DELIVERED	LF	4,033.000		4,033.000
0820	603.0801	CONCRETE BARRIER TEMPORARY PRECAST CONTRACTOR INSTALLED	LF	6,185.000		6,185.000
0830	604.0400	SLOPE PAVING CONCRETE	SY	140.000	140.000	
0840	604.0500	SLOPE PAVING CRUSHED AGGREGATE	SY	1,017.000	1,017.000	
0850	606.0200	RIPRAP MEDIUM	CY	254.000	254.000	
0860	611.0303	INLETS TYPE 3	EACH	4.000	1.000	3.000

3

DATE 22SEP08 E S T I M A T E O F Q U A N T I T I E S

LINE NUMBER	ITEM	ITEM DESCRIPTION	UNIT	TOTAL	1023-02-65 QUANTITY	1023-05-75 QUANTITY
0870	611.0624	INLET COVERS TYPE H	EACH	3.000		3.000
0880	611.0627	INLET COVERS TYPE HM	EACH	1.000	1.000	
0890	612.0106	PIPE UNDERDRAIN 6-INCH	LF	580.000	580.000	
0900	612.0206	PIPE UNDERDRAIN UNPERFORATED 6-INCH	LF	120.000	120.000	
0910	612.0212	PIPE UNDERDRAIN UNPERFORATED 12-INCH	LF	230.000	230.000	
0920	614.0115	ANCHORAGES FOR STEEL PLATE BEAM GUARD TYPE 2	EACH	2.000	2.000	
0930	614.0150	ANCHOR ASSEMBLIES FOR STEEL PLATE BEAM GUARD	EACH	16.000	16.000	
0940	614.0200	STEEL THRIE BEAM STRUCTURE APPROACH	LF	206.000	206.000	
0950	614.0305	STEEL PLATE BEAM GUARD CLASS A	LF	3,520.000	3,520.000	
0960	614.0370	STEEL PLATE BEAM GUARD ENERGY ABSORBING TERMINAL	EACH	15.000	14.000	1.000
0970	614.0400	ADJUSTING STEEL PLATE BEAM GUARD	LF	525.000		525.000
0980	614.0620.S	MARKER POSTS CULVERT END FLEXIBLE	EACH	10.000	10.000	
0990	614.0905	CRASH CUSHIONS TEMPORARY	EACH	4.000		4.000
1000	616.0100	FENCE WOVEN WIRE (HEIGHT) 01. 47 INCHES	LF	780.000	780.000	
1010	618.0100	MAINTENANCE AND REPAIR OF HAUL ROADS (PROJECT) 01. 1023-05-75	EACH	1.000		1.000
1020	619.1000	MOBILIZATION	EACH	1.000	0.500	0.500
1030	625.0500	SALVAGED TOPSOIL	SY	32,160.000	32,160.000	
1040	627.0200	MULCHING	SY	23,680.000	23,680.000	
1050	628.1504	SILT FENCE	LF	5,245.000	5,245.000	
1060	628.1520	SILT FENCE MAINTENANCE	LF	2,620.000	2,620.000	
1070	628.1905	MOBILIZATIONS EROSION CONTROL	EACH	13.000	7.000	6.000
1080	628.1910	MOBILIZATIONS EMERGENCY EROSION CONTROL	EACH	7.000	4.000	3.000
1090	628.2002	EROSION MAT CLASS I TYPE A	SY	16,530.000	16,530.000	
1100	628.2004	EROSION MAT CLASS I TYPE B	SY	700.000	700.000	
1110	628.7015	INLET PROTECTION TYPE C	EACH	4.000	1.000	3.000
1120	628.7504	TEMPORARY DITCH CHECKS	LF	240.000	240.000	
1130	629.0210	FERTILIZER TYPE B	CWT	172.000	38.000	134.000
1140	630.0120	SEEDING MIXTURE NO. 20	LB	946.000	946.000	
1150	630.0130	SEEDING MIXTURE NO. 30	LB	5,842.000	297.000	5,545.000
1160	630.0200	SEEDING TEMPORARY	LB	3,390.000	622.000	2,768.000
1170	633.0100	DELINEATOR POSTS STEEL	EACH	202.000		202.000
1180	633.0500	DELINEATORS	EACH	246.000		246.000
1190	633.1000	DELINEATOR BRACKETS	EACH	2.000		2.000
1200	633.1100	DELINEATORS TEMPORARY	EACH	823.000		823.000
1210	634.0616	POSTS WOOD 4X6-INCH X 16-FT	EACH	48.000		48.000
1220	634.0618	POSTS WOOD 4X6-INCH X 18-FT	EACH	10.000		10.000
1230	634.0805	POSTS TUBULAR STEEL 2X2-INCH X 5-FT	EACH	3.000		3.000
1240	637.0101	SIGNS TYPE I	SF	804.000		804.000
1250	637.0202	SIGNS REFLECTIVE TYPE II	SF	594.890		594.890
1260	638.2601	REMOVING SIGNS TYPE I	EACH	14.000		14.000
1270	638.2602	REMOVING SIGNS TYPE II	EACH	84.000		84.000
1280	638.3000	REMOVING SMALL SIGN SUPPORTS	EACH	71.000		71.000
1290	638.3100	REMOVING STRUCTURAL STEEL SIGN SUPPORTS	EACH	4.000		4.000
1300	642.5201	FIELD OFFICE TYPE C	EACH	1.000		1.000
1310	643.0200	TRAFFIC CONTROL SURVEILLANCE AND MAINTENANCE (PROJECT) 01. 1023-05-75	DAYS	174.000		174.000
1320	643.0300	TRAFFIC CONTROL DRUMS	DAYS	74,675.000		74,675.000
1330	643.0420	TRAFFIC CONTROL BARRICADES TYPE III	DAYS	3,559.000		3,559.000
1340	643.0500	TRAFFIC CONTROL FLEXIBLE TUBULAR MARKER POSTS	EACH	72.000		72.000

3

3

CLEARING & GRUBBING

PROJECT 1023-02-65

STATION	-	STATION	LOCATION	201.0105 CLEARING STA	201.0205 GRUBBING STA
2152+00	-	2153+00	LT	1	1
2155+00	-	2156+00	LT	1	1
2159+00	-	2162+00	LT	3	3
2450+00	-	2452+00	LT	2	2
2455+00	-	2456+00	LT	1	1
2459+00	-	2463+00	LT	4	4
2549+00	-	2551+00	LT	2	2
TOTALS				11	11

REMOVING SMALL PIPE CULVERTS

PROJECT 1023-02-65

STATION	OFFSET	LOCATION	203.0100 REMOVING SMALL PIPE CULVERTS EACH
2157+07	36.85' LT	MAINLINE	1
2465+06	39.24' LT	MAINLINE	1
2547+85	35.37' LT	MAINLINE	1
TOTAL			3

REMOVING PAVEMENT

STATION	-	STATION	LOCATION	204.0100 SY
PROJECT 1023-02-65				
2156+88	-	2157+26	MAINLINE	110
2158+33	-	2158+80	MAINLINE	176
2451+35	-	2451+87	MAINLINE	142
2453+36	-	2454+09	MAINLINE	238
2463+44	-	2463+78	MAINLINE	105
2464+72	-	2465+25	MAINLINE	201
2547+90	-	2748+15	MAINLINE	96
2549+20	-	2549+36	MAINLINE	87
45'J'+10	-	47'J'+89	CTH EW EXIT RAMP	536
2549+36	-	2553+50	CTH EW EXIT RAMP TAPER	210
PROJECT 1023-02-65			SUB-TOTAL	1,901
PROJECT 1023-05-75				
46'K'+42	-	46'K'+57	CTH EW ENT. RAMP, RT	13
39'J'+44	-	39'J'+59	CTH EW EXIT RAMP, LT	13
43'J'+94	-	44'J'+09	CTH EW EXIT RAMP, LT	13
PROJECT 1023-05-75			SUB-TOTAL	38
TOTAL				1,939

REMOVING PAVEMENT BUTT JOINTS

PROJECT 1023-05-75

STATION	-	STATION	LOCATION	STAGE	204.0105 SY
2158'B'+70	-	2159'B'+13	CTH O ENT. RAMP	8	480
2159'D'+03	-	2159'D'+43	CTH O EXIT RAMP	8	300
50'K'+28	-	50'K'+66	CTH EW ENT. RAMP	8	220
34'J'+73	-	35'J'+11	CTH EW EXIT RAMP	8	240
TOTAL					1,240

REMOVING ASPHALTIC SURFACE BUTT JOINTS

STATION	-	STATION	LOCATION	STAGE	204.0115 SY
PROJECT 1023-02-65					
2153+62.50	-	2154+00.00	MAINLINE	3	100
2162+00.00	-	2162+37.50	MAINLINE	3	120
2449+62.50	-	2450+00.00	MAINLINE	3	100
2455+00.00	-	2455+37.50	MAINLINE	3	100
2461+62.50	-	2462+00.00	MAINLINE	3	100
2467+00.00	-	2467+37.50	MAINLINE	3	110
2546+62.50	-	2547+00.00	MAINLINE	3	130
2553+00.00	-	2553+37.50	MAINLINE	3	130
2153+62.50	-	2154+00.00	MAINLINE	5	120
2162+00.00	-	2162+37.50	MAINLINE	5	140
2449+62.50	-	2450+00.00	MAINLINE	5	120
2455+00.00	-	2455+37.50	MAINLINE	5	150
2461+62.50	-	2462+00.00	MAINLINE	5	120
2467+00.00	-	2467+37.50	MAINLINE	5	150
2546+62.50	-	2547+00.00	MAINLINE	5	120
2553+00.00	-	2553+37.50	MAINLINE	5	140
PROJECT 1023-02-65			SUB-TOTAL		1,950
PROJECT 1023-05-75					
2140+00.00	-	2140+37.50	MAINLINE	8	310
2179+54.00	-	2180+05.00	MAINLINE	8	210
2339+84.00	-	2340+52.00	MAINLINE	8	280
2388+40.00	-	2388+88.00	MAINLINE	8	200
2358+71.00	-	2359+23.00	MAINLINE	8	220
2524+36.00	-	2524+88.00	MAINLINE	8	220
2556+42.00	-	2556+97.00	MAINLINE	8	230
2613+62.50	-	2614+00.00	MAINLINE	8	70
2140+00.00	-	2140+37.50	MAINLINE	10	90
2613+62.50	-	2614+00.00	MAINLINE	10	90
PROJECT 1023-05-75			SUB-TOTAL		1,920
TOTAL					3,870

REMOVING ASPHALTIC SURFACE MILLING

STATION	-	STATION	LOCATION	STAGE	204.0120 SY
PROJECT 1023-02-65					
2144+30	-	2157+04	MAINLINE	1	850
2158+33	-	2185+45	MAINLINE	1	1,810
2429+67	-	2451+52	MAINLINE	1	1,650
2453+42	-	2463+60	MAINLINE	1	740
2464+71	-	2491+88	MAINLINE	1	1,950
2528+46	-	2548+10	MAINLINE	1	1,120
2549+20	-	2580+02	MAINLINE	1	1,700
2154+00	-	2156+88	MAINLINE	5	930
2158+80	-	2162+00	MAINLINE	5	1,030
2450+00	-	2451+36	MAINLINE	5	450
2454+09	-	2455+00	MAINLINE	5	300
2462+00	-	2463+44	MAINLINE	5	470
2465+24	-	2467+00	MAINLINE	5	580
2547+00	-	2547+91	MAINLINE	5	280
2549+35	-	2553+00	MAINLINE	5	1,140
PROJECT 1023-02-65			SUB-TOTAL		15,000
PROJECT 1023-05-75					
2140+00	-	2156+88	MAINLINE	8	3,390
2158+80	-	2451+36	MAINLINE	8	53,150
2454+09	-	2463+44	MAINLINE	8	1,800
2465+24	-	2547+91	MAINLINE	8	14,940
2549+35	-	2614+00	MAINLINE	8	11,580
2140+00	-	2156+88	MAINLINE	10	4,130
2158+80	-	2451+36	MAINLINE	10	71,760
2454+09	-	2463+44	MAINLINE	10	2,290
2465+24	-	2547+91	MAINLINE	10	20,310
2549+35	-	2614+00	MAINLINE	10	15,720
PROJECT 1023-05-75			SUB-TOTAL		199,070
TOTAL					214,070

REMOVING CURB & GUTTER

PROJECT 1023-05-75

STATION	-	STATION	LOCATION	204.0150 LF
46'K'+42	-	46'K'+57	CTH EW ENT. RAMP, RT	15
39'J'+44	-	39'J'+59	CTH EW EXIT RAMP, LT	15
43'J'+94	-	44'J'+09	CTH EW EXIT RAMP, LT	15
UNDISTRIBUTED			CTH EW RAMPS	50
TOTAL				95

REMOVING GUARDRAIL

STATION	-	STATION	LOCATION	204.0165 LF
PROJECT 1023-02-65				
2155+60	-	2157+19	LT	159
2155+99	-	2156+95	RT	96
2156+65	-	2156+95	RT	54
2158+07	-	2158+38	RT	54
2158+40	-	2159+56	RT	116
2158+63	-	2161+92	LT	329
2450+42	-	2451+44	RT	102
2450+82	-	2451+84	RT	102
2450+94	-	2451+32	RT	52
2453+02	-	2453+40	RT	52
2453+40	-	2456+98	RT	358
2453+85	-	2457+78	LT	393
2462+55	-	2463+50	RT	95
2462+76	-	2463+72	LT	96
2463+20	-	2463+50	RT	56
2464+46	-	2464+78	RT	56
2464+78	-	2467+28	RT	250
2464+97	-	2466+94	LT	197
2547+04	-	2547+98	LT	94
2547+07	-	2548+03	RT	96
2548+02	-	2548+06	RT	38
2549+27	-	2551+67	LT	240
2549+29	-	2549+32	RT	38
2549+29	-	2552+80	RT	351
18'C'+88	-	21'C'+77	CTH O LT	289
18'C'+95	-	22'C'+10	CTH O RT	315
260'A'+25	-	262'A'+80	ASPEN AVE. LT	255
260'A'+32	-	262'A'+84	ASPEN AVE. RT	252
18'E'+45	-	22'E'+04	CTH EW LT	359
18'E'+60	-	21'E'+64	CTH EW RT	304
PROJECT 1023-02-65			SUB-TOTAL	5,248
PROJECT 1023-05-75				
2581+56	-	2582+20	LT	64
PROJECT 1023-05-75			SUB-TOTAL	64
			TOTAL	5,312

REMOVING INLETS

PROJECT 1023-05-75

STATION	OFFSET	LOCATION	204.0220 REMOVING INLETS EACH
46'K'+50	16.5' RT	CTH EW ENT. RAMP	1
39'J'+52	1.5' LT	CTH EW EXIT RAMP	1
44'J'+03	1.5' LT	CTH EW EXIT RAMP	1
47'J'+77.3	1.5' LT	CTH EW EXIT RAMP	1
TOTALS			4

PREPARE FOUNDATION FOR ASPHALTIC PAVING

PROJECT 1023-05-75

STATION	-	STATION	211.0100 LS LOCATION
2140+00	-	2156+88	MAINLINE
2158+80	-	2451+36	MAINLINE
2454+09	-	2463+44	MAINLINE
2465+24	-	2547+91	MAINLINE
2549+35	-	2614+00	MAINLINE
2140+00	-	2156+88	MAINLINE
2158+80	-	2451+36	MAINLINE
2454+09	-	2463+44	MAINLINE
2465+24	-	2547+91	MAINLINE
2549+35	-	2614+00	MAINLINE

FOR INFORMATION ONLY

REMOVING ASPHALTIC SURFACE

PROJECT 1023-02-65

STATION	-	STATION	LOCATION	204.0110 SY
43'J'+57	-	45'J'+07	CTH EW ENT. RAMP, RT	215
TOTAL				215

REMOVING SURFACE DRAINS

PROJECT 1023-02-65

STATION	-	STATION	LOCATION	204.0190 EACH
2464+84	-	2465+22	CONCRETE FLUME LT	1
2549+93	-	2550+38	CONCRETE FLUME LT	1
TOTAL				2

EARTHWORK

PROJECT 1023-02-65

STATION	-	STATION	205.0100 EXCAVATION COMMON CY	205.0200 EXCAVATION ROCK CY	ADJUSTED FILL CY	HAUL IN CY	HAUL OUT CY	208.0100 BORROW CY
MAINLINE								
2149+00	-	2167+00	2,094	---	8,902	---	---	6,808
2439+00	-	2479+00	5,463	---	15,494	1,551	---	8,480
2536+00	-	2568+00	4624	294	2,779	---	1,551	---
		TOTALS	12,181	294	27,175	1,551	1,551	15,288

ADJUSTED FILL = FILL(1.25)

ALL ITEMS ARE CATEGORY CODE 0010

3

CULVERT PIPE, PIPE UNDERDRAIN UNPERFORATED & APRON ENDWALLS

STATION		LOCATION	520.1012 APRON ENDWALLS STEEL 12-INCH EACH	520.8000.S CULVERT PIPE CONCRETE COLLAR EACH	522.0112 CULVERT PIPE REINF. CONC. CLASS III 12-INCH LF	522.0118 CULVERT PIPE REINF. CONC. CLASS III 18-INCH LF	524.0618 APRON ENDWALLS FOR CULV. PIPE SALVAGED 18-INCH LF	612.0212 PIPE UNDERDRAIN UNPERFORATED 12-INCH LF
PROJECT 1023-02-65								
2157+15	LT	MAINLINE	1	---	---	---	---	42
2451+92	LT	MAINLINE	1	---	---	---	---	38
2455+00	LT	MAINLINE	---	2	---	24	1	---
2461+50	LT	MAINLINE	---	2	---	8	1	---
2467+00	LT	MAINLINE	---	2	---	11	1	---
2465+22.5	LT	MAINLINE	1	---	---			66
2549+82	LT	MAINLINE	---	2	---	9	1	---
47'J'+77.3	LT	CTH EW EXIT RAMP	1	---	---	---	---	84
PROJECT 1023-02-65		SUB-TOTAL	4	8	0	52	4	230
PROJECT 1023-05-75								
46'K'+50	RT	CTH EW ENT. RAMP	---	1	4	---	---	---
39'J'+52	LT	CTH EW EXIT RAMP	---	1	4	---	---	---
44'J'+03	LT	CTH EW EXIT RAMP	---	1	4	---	---	---
PROJECT 1023-05-75		SUB-TOTAL	0	3	12	0	0	0
		TOTALS	4	11	12	52	4	230

RIPRAP MEDIUM AND GEOTEXTILE FABRIC TYPE HR

PROJECT 1023-02-65

STATION	-	STATION	OFFSET	LOCATION	606.0200 RIPRAP MEDIUM CY	645.0120 GEOTEXTILE FABRIC TYPE HR SY
2156+62			30' RT	MAINLINE	2	4
2157+15			106' LT	MAINLINE	3	5
2450+95			30' RT	MAINLINE	2	4
2451+92			96' LT	MAINLINE	3	5
2455+00			132' LT	MAINLINE	2	4
2461+50			73' LT	MAINLINE	2	4
2464+90			35' RT	MAINLINE	2	4
2465+22			123' LT	MAINLINE	2	4
2467+00			73' LT	MAINLINE	2	4
2547+78			31' RT	MAINLINE	2	4
2547+79			140' LT	MAINLINE	3	5
2549+82			78' LT	MAINLINE	3	5
2548+89	-	2550+25	LT	MAINLINE	137	274
2554+70			65' LT	MAINLINE	36	71
2557+44			60' LT	MAINLINE	53	105
				TOTALS	254	502

CONCRETE CURB & GUTTER

STATION	-	STATION	LOCATION	30-INCH TYPE A 601.0409 LF	4-INCH SLOPED 36-INCH TYPE D 601.0553 LF
PROJECT 1023-05-75					
46'K'+42	-	46'K'+57	CTH EW ENT. RAMP, RT	15	---
39'J'+44	-	39'J'+59	CTH EW EXIT RAMP, LT	15	---
43'J'+94	-	44'J'+09	CTH EW EXIT RAMP, LT	15	---
UNDISTRIBUTED			CTH EW RAMPS	50	---
PROJECT 1023-05-75			SUB-TOTAL	95	0
PROJECT 1023-02-65					
45'J'+10	-	47'J'+93	CTH EW EXIT RAMP, LT	---	283
PROJECT 1023-02-65			SUB-TOTAL	0	283
			TOTAL	95	283

INLETS AND INLET COVERS

STATION	OFFSET	LOCATION	611.0303 INLETS TYPE 3 EACH	611.0624 INLET COVERS TYPE H EACH	611.0627 INLET COVERS TYPE HM EACH	FLANGE LINE ELEVATION	INVERT ELEVATION	DEPTH
PROJECT 1023-05-75								
46'K'+50	16.5' RT	CTH EW ENT. RAMP	1	1	---	1041.00	1032.00	7.83
39'J'+52	1.5' LT	CTH EW EXIT RAMP	1	1	---	1040.60	1035.00	4.43
44'J'+03	1.5' LT	CTH EW EXIT RAMP	1	1	---	1052.30	1044.00	7.13
PROJECT 1023-05-75		SUB-TOTAL	3	3	0			
PROJECT 1023-02-65								
47'J'+77.3	1.5' LT	CTH EW EXIT RAMP	1	---	1	1062.81	1057.81	3.83
PROJECT 1023-02-65		SUB-TOTAL	1	0	1			
TOTALS			4	3	1			

DEPTH OF STRUCTURE IS GUTTER FLANGE ELEVATION MINUS THE DEPTH OF FRAME AND RINGS MINUS THE INVERT ELEVATION.
DEPTH OF FRAME AND RINGS FOR TYPE H AND TYPE HM COVERS IS 1.17'. (INCLUDES 0.64' FOR RINGS)

BEAM GUARD ITEMS

STATION	-	STATION	LOCATION	614.0115 ANCHORAGES FOR STEEL PLATE BEAM GUARD TYPE 2 EACH	614.0200 STEEL THRIE BEAM STRUCTURE APPROACH LF	614.0305 STEEL PLATE BEAM GUARD CLASS A LF	614.0370 STEEL PLATE BEAM GUARD ENERGY ABSORBING TERMINAL EACH	614.0400 ADJUSTING STEEL PLATE BEAM GUARD LF	502.6105 MASONRY ANCHOR TYPE S 5/8 INCH EACH
PROJECT 1023-02-65									
2158+36.6	-	2161+29.7	RT	---	20.6	222.5	1	---	---
2158+77.5	-	2161+20.6	LT	---	20.6	172.5	1	---	---
2448+50.0	-	2452+00.0	LT	1	20.6	329.4	---	---	---
2453+29.4	-	2456+22.5	RT	---	20.6	222.5	1	---	---
2453+92.6	-	2456+35.7	LT	---	20.6	172.5	1	---	---
2464+79.5	-	2467+72.8	RT	---	20.6	222.7	1	---	---
2465+12.2	-	2467+55.0	LT	---	20.6	172.2	1	---	---
2549+92.5	-	2551+71.5	LT	---	20.6	108.4	1	---	---
2549+33.1	-	2552+26.3	RT	---	20.6	222.6	1	---	---
18'C'+59.5	-	22'C'+09.5	CTH O LT *	---	---	250	1	---	104
18'C'+70.0	-	22'C'+20.0	CTH O RT *	---	---	250	1	---	104
259'A'+85.0	-	263'A'+22.5	ASPEN AVE. LT	---	---	237.5	1	---	---
260'A'+02.4	-	263'A'+39.9	ASPEN AVE. RT	---	---	237.5	1	---	---
18'E'+38.20	-	22'E'+09.00	CTH EW LT *	---	---	02'E'+70.90	1	---	88
18'E'+62.08	-	21'E'+65.40	CTH EW RT *	---	---	203.4	1	---	88
45'J'+46.63	-	47'J'+92.50	CTH EW EXIT RAMP LT	1	20.6	225.4	---	---	---
PROJECT 1023-02-65			SUB-TOTAL	2	206	3520	14	0	384
PROJECT 1023-05-75									
2576+95.0	-	2582+20.0	LT	---	---	---	1	525	---
PROJECT 1023-05-75			SUB-TOTAL	0	0	0	1	525	0
			TOTALS	2	206	3520.0	15	525	384

* PARTIALLY MOUNTED ON PIER FOOTING.
CTH O 81.5 FEET EACH SIDE
CTH EW 68 FEET EACH SIDE

MARKER POSTS CULVERT END FLEXIBLE

PROJECT 1023-02-65

STATION	OFFSET	LOCATION	614.0620.S MARKER POSTS EACH
2156+62	30' RT	MAINLINE	1
2157+15	95' LT	MAINLINE	1
2450+95	30' RT	MAINLINE	1
2451+92	95' LT	MAINLINE	1
2455+00	130' LT	MAINLINE	1
2461+50	70' LT	MAINLINE	1
2464+90	35' RT	MAINLINE	1
2465+22	123' LT	MAINLINE	1
2467+00	73' LT	MAINLINE	1
2547+79	140' LT	MAINLINE	1
2549+82	74' LT	MAINLINE	1
		TOTALS	10

FENCE WOVEN WIRE

PROJECT 1023-02-65

STATION	-	STATION	LOCATION	616.0100 LF
2452+00	-	2452+50	LT	50
2454+00	-	2460+00	LT	730
			TOTAL	780

EROSION MAT

PROJECT 1023-02-65

STATION	-	STATION	LOCATION	628.2002 EROSION MAT CLASS I, TYPE A SY	628.2004 EROSION MAT CLASS I, TYPE B SY
2154+00	-	2157+04	LT	1,970	----
2158+33	-	2163+00	LT	2,780	----
2448+00	-	2452+00	LT	2,340	----
2453+41	-	2459+00	LT	4,920	----
2455+00	-	2460+00	LT	----	560
2540+50	-	2542+00	LT	1,210	
			UNDISTRIBUTED	3,310	140
			TOTALS	16,530	700

SILT FENCE

PROJECT 1023-02-65

STATION	-	STATION	LOCATION	628.1504 SILT FENCE LF	628.1520 SILT FENCE MAINTENANCE LF
2151+00	-	2157+04	LT	610	305
2158+33	-	2163+00	LT	470	235
2438+50 AH	-	2452+00	LT	1,350	675
2453+41	-	2455+00	LT	160	80
2455+20	-	2459+00	LT	380	190
2462+00	-	2463+60	LT	160	80
2464+70	-	2468+00	LT	330	165
2537+50	-	2544+00	LT	690	345
2545+00	-	2548+10	LT	310	155
UNDISTRIBUTED				785	390
			TOTALS	5,245	2,620

ALL ITEMS ARE CATEGORY CODE 0010

3

LANDSCAPING

STATION	-	STATION	LOCATION	625.0500 SALVAGED TOPSOIL SY	627.0200 MULCHING SY	629.0210 FERTILIZER TYPE B CWT	630.0120 SEEDING MIXTURE NO. 20 LB	630.0130 SEEDING MIXTURE NO. 30 LB	630.0200 SEEDING TEMPORARY LB
PROJECT 1023-02-65									
2149+00	-	2157+04	RT	410	410	1	----	11	6
2149+00	-	2157+04	LT	2,520	550	2	68	10	39
2158+33	-	2167+00	RT	370	370	1	----	13	7
2158+33	-	2167+00	LT	3,850	1,070	3	104	12	58
2439+00	-	2452+00	RT	260	260	1	----	13	7
2439+00	-	2452+00	LT	3,930	1,590	3	106	16	61
2453+41	-	2463+60	RT	620	620	1	----	17	9
2453+41	-	2463+60	LT	6,990	2,070	5	189	14	102
2464+70	-	2479+00	RT	1,490	1,490	1	----	35	18
2464+70	-	2479+00	LT	4,020	4,020	3	109	18	64
2536+00	-	2548+10	RT	460	460	1	----	16	8
2536+00	-	2548+10	LT	2,990	1,780	2	81	16	49
2549+20	-	2568+00	RT	570	570	1	----	22	11
2549+20	-	2568+00	LT	3,680	3,680	3	99	24	62
UNDISTRIBUTED				----	4,740	10	190	60	125
PROJECT 1023-02-65			**SUB-TOTAL**	**32,160**	**23,680**	**38**	**946**	**297**	**622**
PROJECT 1023-05-75									
2140+00	-	2149+00	RT	----	----	1	----	41	21
2140+00	-	2149+00	LT	----	----	1	----	54	27
2167+00	-	2439+00	RT	----	----	29	----	1,224	612
2167+00	-	2439+00	LT	----	----	38	----	1,632	816
2479+00	-	2536+00	RT	----	----	6	----	257	129
2479+00	-	2536+00	LT	----	----	8	----	342	171
2568+00	-	2614+00	RT	----	----	5	----	207	104
2568+00	-	2614+00	LT	----	----	6	----	276	138
2149'B'+00	-	2159'B'+14	CTH O ENT. RAMP RT	----	----	1	----	46	23
2149'B'+00	-	2159'B'+14	CTH O ENT. RAMP LT	----	----	1	----	46	23
2159'D'+03	-	2168'D'+00	CTH O EXIT RAMP RT	----	----	1	----	40	20
2159'D'+03	-	2168'D'+00	CTH O EXIT RAMP LT	----	----	1	----	40	20
35'K'+50.00	-	50'K'+65.97	CTH EW ENT. RAMP RT	----	----	2	----	68	34
35'K'+50.00	-	50'K'+65.97	CTH EW ENT. RAMP LT	----	----	2	----	68	34
34'J'+73.16	-	45'J'+10.52	CTH EW EXIT RAMP RT	----	----	1	----	47	24
34'J'+73.16	-	45'J'+10.52	CTH EW EXIT RAMP LT	----	----	1	----	47	24
UNDISTRIBUTED				----	----	30	0	1,110	550
PROJECT 1023-05-75			**SUB-TOTAL**	**0**	**0**	**134**	**0**	**5,545**	**2,768**
			TOTALS	**32,160**	**23,680**	**210**	**1,892**	**6,139**	**4,011**

DELINEATOR POSTS STEEL, DELINEATORS, AND DELINEATOR BRACKETS

PROJECT 1023-05-75

STATION	-	STATION	LOCATION	633.0100 DELINEATOR POSTS STEEL EACH	633.0500 DELINEATORS WHITE EACH	633.0500 DELINEATORS YELLOW EACH		633.1000 DELINEATOR BRACKETS EACH	SPACING FEET
2140+00 AH	-	2150+00	MAINLINE LT	10	20	---		---	100
2150+00	-	2157+00	MAINLINE LT	4	4	---		---	200
2159+00	-	2166+00	MAINLINE LT	4	4	---		---	200
2166+00	-	2176+00	MAINLINE LT	10	20	---		---	100
2176+00	-	2452+00	MAINLINE LT	69	69	---		---	400
2454+00	-	2463+00	MAINLINE LT	2	2	---		---	400
2465+00	-	2530+00	MAINLINE LT	16	16	---		---	400
2530+00	-	2537+00	MAINLINE LT	7	14	---		---	100
2537+00	-	2545+00	MAINLINE LT	4	4	---		---	200
2545+00	-	2554+00	MAINLINE LT	7	18	---		2	100
2554+00	-	2614+00	MAINLINE LT	15	15	---		---	400
2150'B'+00	-	2156'B'+20	CTH O ENT. RAMP LT	6	6	---		---	100
2156'B'+20	-	2158'B'+60	CTH O ENT. RAMP LT	3	3	---		---	80
2160'D'+00	-	2166'D'+00	CTH O EXIT RAMP LT	6	6	---		---	100
37'K'+00	-	40'K'+75	CTH EW ENT. RAMP LT	5	5	---		---	75
40'K'+75	-	43'K'+50	CTH EW ENT. RAMP LT	3	3	---		---	100
43'K'+50	-	46'K'+80	CTH EW ENT. RAMP LT	6	6	---		---	55
46'K'+80	-	50'K'+00	CTH EW ENT. RAMP LT	3	3	---		---	100
47'K'+46	-	49'K'+97	CTH EW ENT. RAMP RT	6	---	12	*	---	50
35'J'+50	-	38'J'+50	CTH EW EXIT RAMP LT	3	3	---		---	100
38'J'+50	-	43'J'+00	CTH EW EXIT RAMP RT	13	---	13		---	35
43'J'+00	-	45'J'+00	CTH EW EXIT RAMP RT	6	---	6		---	35
		SUB-TOTAL			**221**	**25**			
		TOTAL		**202**	**246**			**2**	

* MOUNT DELINEATOR ON FRONT AND BACK SIDE OF POST

PAVEMENT MARKING ITEMS

PROJECT 1023-05-75

STATION	-	STATION	LOCATION	PAVEMENT MARKING EPOXY 4-INCH 646.0106 EDGE LINE YELLOW LF	PAVEMENT MARKING EPOXY 4-INCH 646.0106 EDGE LINE WHITE LF	PAVEMENT MARKING EPOXY 8-INCH 646.0126 LF	PAVEMENT MARKING WET REFLECTIVE TAPE 4-INCH 646.0871.S LF	PAVEMENT MARKING WET REFLECTIVE TAPE 8-INCH 646.0873.S LF	PAVEMENT MARKING CURB EPOXY 647.0456 LF	PAVEMENT MARKING STOP LINE EPOXY 18-INCH 647.0566 LF
2140+00 AH	-	2143+31.00	WB MAINLINE	331	331	---	83	---	---	---
2143+31.00	-	2150+06.00	WB MAINLINE	675	441	---	169	675	---	---
2150+06.00	-	2166+36.00	WB MAINLINE	1630	1630	---	408	---	---	---
2166+36.00	-	2169+64.00	WB MAINLINE	328	35	---	82	328	---	---
2169+64.00	-	2242+01.66 BK	WB MAINLINE	7238	7304	---	1809	---	---	---
2241+95.67 AH	-	2299+82.03	WB MAINLINE	5786	5786	---	1447	---	---	---
2299+88.30	-	2354+16.89	WB MAINLINE	5429	5429	---	1357	---	---	---
2354+18.21	-	2401+67.04	WB MAINLINE	4749	4749	---	1187	---	---	---
2401+70.19	-	2438+72.91 BK	WB MAINLINE	3703	3703	---	926	---	---	---
2437+67.56 AH	-	2476+08.91	WB MAINLINE	3841	3841	---	960	---	---	---
2476+13.60	-	2477+21.93	WB MAINLINE	108	108	---	27	---	---	---
2477+34.16	-	2531+74.44 BK	WB MAINLINE	5440	5440	---	1360	---	---	---
2531+20.31 AH	-	2531+64.00	WB MAINLINE	44	44	---	11	---	---	---
2531+64.00	-	2536+97.00	WB MAINLINE	533	318	---	133	533	---	---
2536+97.00	-	2545+10.00	WB MAINLINE	813	813	---	203	---	---	---
2545+10.00	-	2546+85.00	WB MAINLINE	175	---	---	44	175	---	---
2546+85.00	-	2570+80.84	WB MAINLINE	2396	2531	---	599	---	---	---
2571+10.60	-	2595+63.87	WB MAINLINE	2453	2453	---	613	---	---	---
2595+66.87	-	2614+00.00	WB MAINLINE	1833	1833	---	458	---	---	---
2147'B'+72.12	-	2159'B'+00.00	CTH O ENT. RAMP	1128	1128	---	---	664	---	---
2159'D'+16.00	-	2169'D'+29.32	CTH O EXIT RAMP	1013	1013	---	---	326	---	---
2159'D'+70.00	-	2160'D'+11.00	CTH O EXIT RAMP	---	---	84	---	---	---	44
34'K'+81.94	-	50'K'+55.00	CTH EW ENT. RAMP	1573	1573	---	---	534	---	---
34'J'+94.00	-	47'J'+98.33	CTH EW EXIT RAMP	1304	1304	---	---	190	---	---
35'J'+25.00	-	35'J'+75.00	CTH EW EXIT RAMP	---	---	102	---	---	10	40
		SUB-TOTAL		**52524**	**51,807**					
		TOTALS		**104,331**		**186**	**11,876**	**3,425**	**10**	**84**

ALL ITEMS ARE CATEGORY CODE 0010

MOBILIZATIONS EROSION CONTROL

STATION	-	STATION	LOCATION	628.1905 MOBILIZATIONS EROSION CONTROL (EACH)	628.1910 MOBILIZATIONS EMERGENCY EROSION CONTROL (EACH)
PROJECT 1023-02-65					
2149+00	-	2157+04	LT & RT	1	0.5
2158+33	-	2167+00	LT & RT	1	0.5
2439+00	-	2452+00	LT & RT	1	0.5
2453+41	-	2463+60	LT & RT	1	0.5
2464+70	-	2479+00	LT & RT	1	0.5
2536+00	-	2548+10	LT & RT	1	0.5
2549+20	-	2568+00	LT & RT	1	1
PROJECT 1023-02-65			**SUB-TOTAL**	**7**	**4**
PROJECT 1023-05-75					
2140+00	-	2149+00	LT & RT	1	0.5
2167+00	-	2439+00	LT & RT	1	0.5
2479+00	-	2536+00	LT & RT	1	0.5
2568+00	-	2614+00	LT & RT	1	0.5
CTH O RAMPS			LT & RT	1	0.5
CTH EW RAMPS			LT & RT	1	0.5
PROJECT 1023-05-75			**SUB-TOTAL**	**6**	**3**
				13	**7**
		TOTALS			

INLET PROTECTION TYPE C

STATION	OFFSET	LOCATION	628.7015 EACH
PROJECT 1023-05-75			
46'K'+50	16.5' RT	CTH EW ENT. RAMP	1
39'J'+52	1.5' LT	CTH EW EXIT RAMP	1
44'J'+03	1.5' LT	CTH EW EXIT RAMP	1
PROJECT 1023-05-75		**SUB-TOTAL**	**3**
PROJECT 1023-02-65			
47'J'+77.3	1.5' LT	CTH EW EXIT RAMP	1
PROJECT 1023-02-65		**SUB-TOTAL**	**1**
		TOTALS	**4**

TEMPORARY DITCH CHECKS

PROJECT 1023-02-65

STATION	-	STATION	LOCATION	628.7504 LF
2163+00	-	2165+00	LT	30
2472+00		2478+00	LT	30
2550+50	-	2568+00	LT	130
UNDISTRIBUTED				50
		TOTALS		**240**

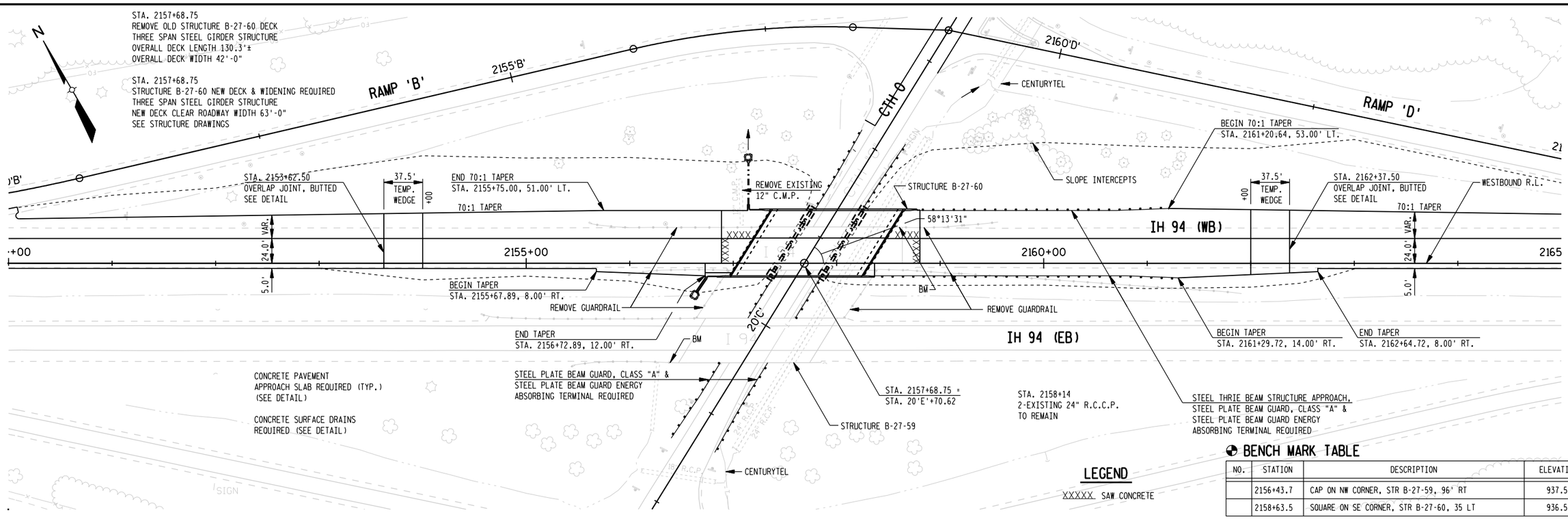

BENCH MARK TABLE

NO.	STATION	DESCRIPTION	ELEVATION
	2156+43.7	CAP ON NW CORNER, STR B-27-59, 96' RT	937.52
	2158+63.5	SQUARE ON SE CORNER, STR B-27-60, 35 LT	936.54

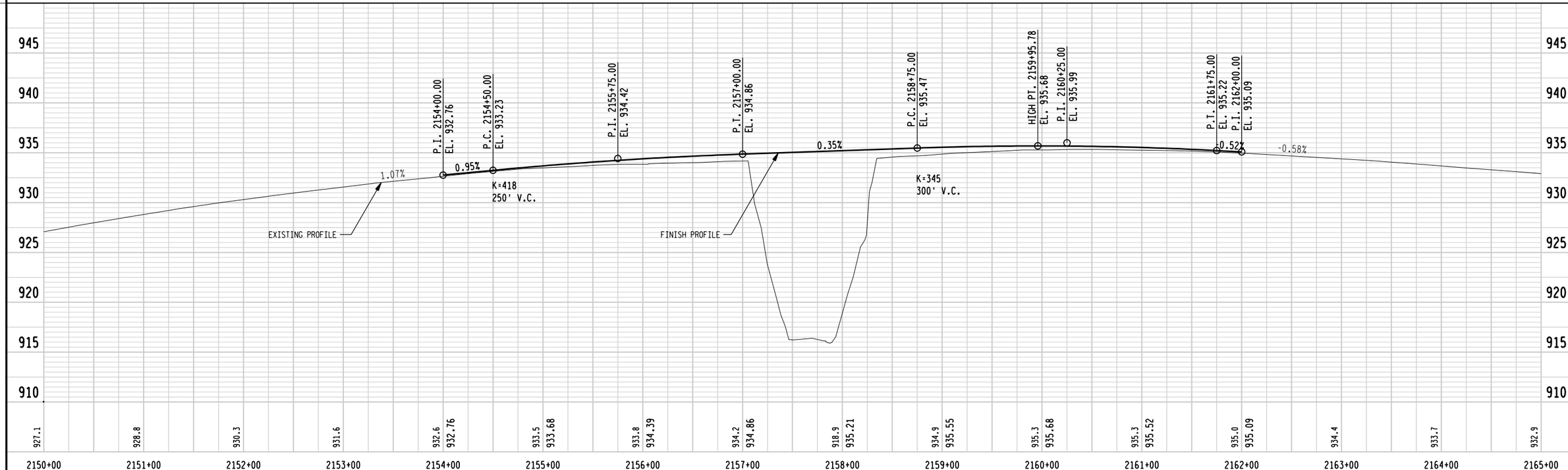

PROJECT NO.: 1023-05-75 & 1023-02-65	HWY: IH 94	COUNTY: JACKSON & MONROE	IH 94 (WB) PLAN AND PROFILE (AT CTH O)	SHEET 127	E

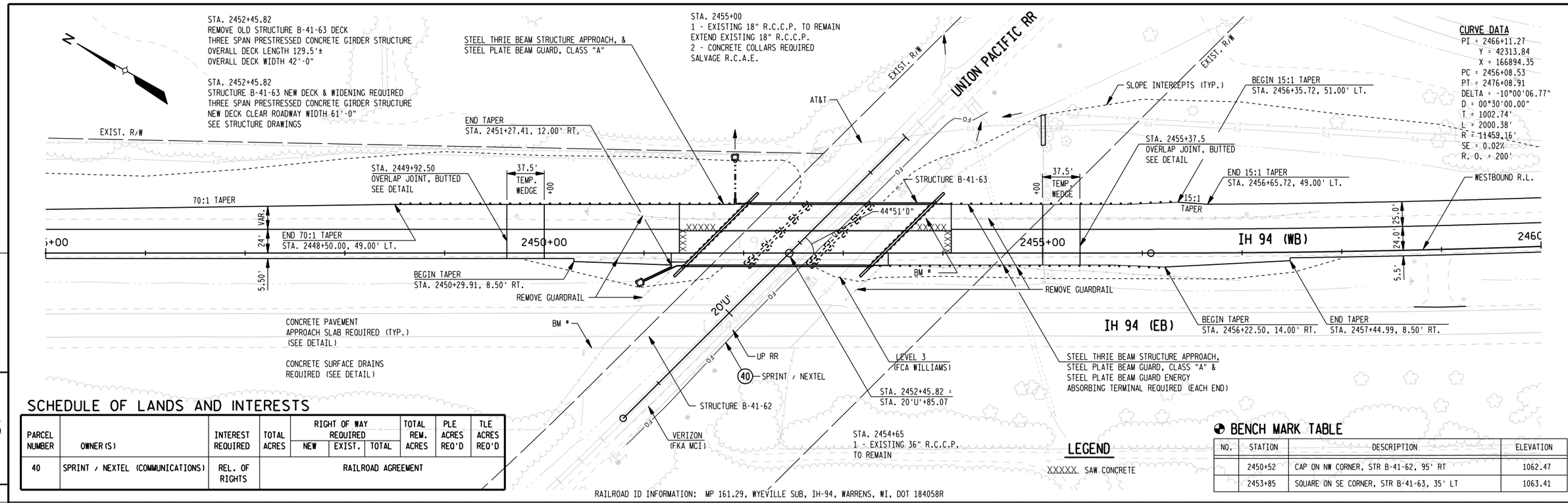

SCHEDULE OF LANDS AND INTERESTS

PARCEL NUMBER	OWNER (S)	INTEREST REQUIRED	TOTAL ACRES	RIGHT OF WAY REQUIRED			TOTAL REM. ACRES	PLE ACRES REQ'D	TLE ACRES REQ'D
				NEW	EXIST.	TOTAL			
40	SPRINT / NEXTEL (COMMUNICATIONS)	REL. OF RIGHTS	RAILROAD AGREEMENT						

BENCH MARK TABLE

NO.	STATION	DESCRIPTION	ELEVATION
	2450+52	CAP ON NW CORNER, STR B-41-62, 95' RT	1062.47
	2453+85	SQUARE ON SE CORNER, STR B-41-63, 35' LT	1063.41

RAILROAD ID INFORMATION: MP 161.29, WYEVILLE SUB, IH-94, WARRENS, WI, DOT 184058R

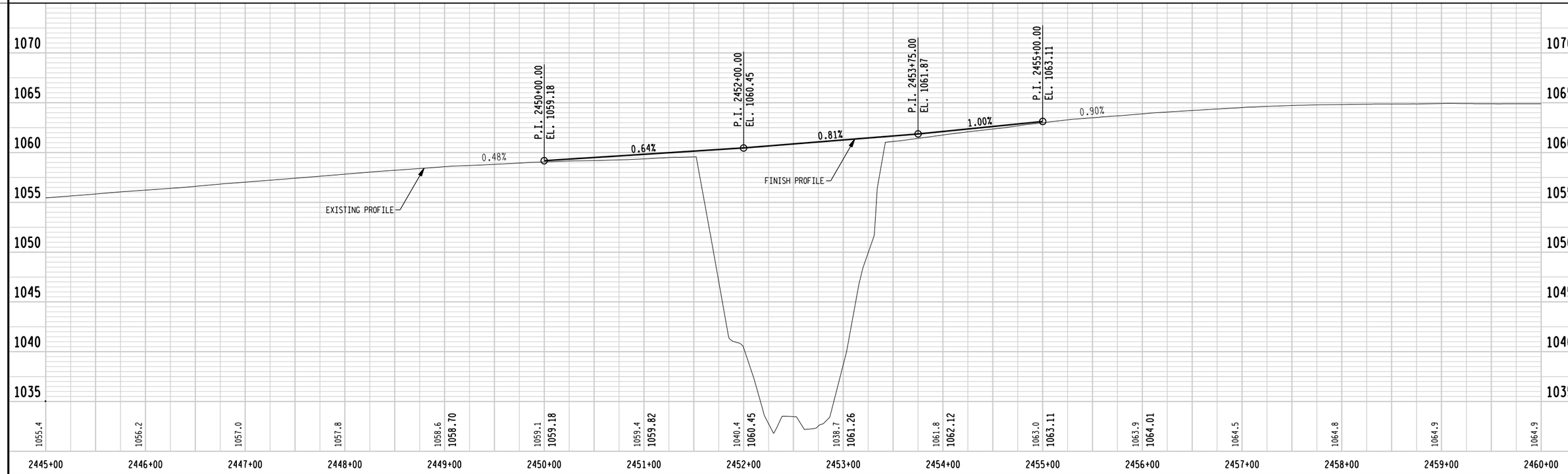

PROJECT NO.: 1023-05-75 & 1023-02-65	HWY: IH 94	COUNTY: JACKSON & MONROE	IH 94 (WB) PLAN AND PROFILE (AT UNION PACIFIC RR)	SHEET 128	E

STA. 2464+15.60
REMOVE OLD STRUCTURE B-41-65 DECK
THREE SPAN REINFORCED CONCRETE FLAT SLAB STRUCTURE
OVERALL DECK LENGTH 111.9'±
OVERALL DECK WIDTH 42'-0"

STA. 2464+15.60
STRUCTURE B-41-65 NEW DECK & WIDENING REQUIRED
THREE SPAN REINFORCED CONCRETE HAUNCHED SLAB STRUCTURE
NEW DECK CLEAR ROADWAY WIDTH 61'-0"
SEE STRUCTURE DRAWINGS

STA. 2461+50
1-EXISTING 18" R.C.C.P. AND TYPE 8 INLET TO REMAIN
EXTEND ESXISTING 18" R.C.C.P.
2-CONCRETE COLLARS REQUIRED
SALVAGE R.C.A.E.

CURVE DATA
PI = 2466+11.27
Y = 42313.84
X = 166894.35
PC = 2456+08.53
PT = 2476+08.91
DELTA = -10°00'06.77"
D = 00°30'00.00"
T = 1002.74'
L = 2000.38'
R = 11459.16'
SE = 0.02%
R.O. = 200'

STA. 2467+00
1-EXISTING 18" R.C.C.P. AND TYPE 8 INLET TO REMAIN
EXTEND EXISTING 18" R.C.C.P.
2-CONCRETE COLLARS REQUIRED
SALVAGE R.C.A.E.

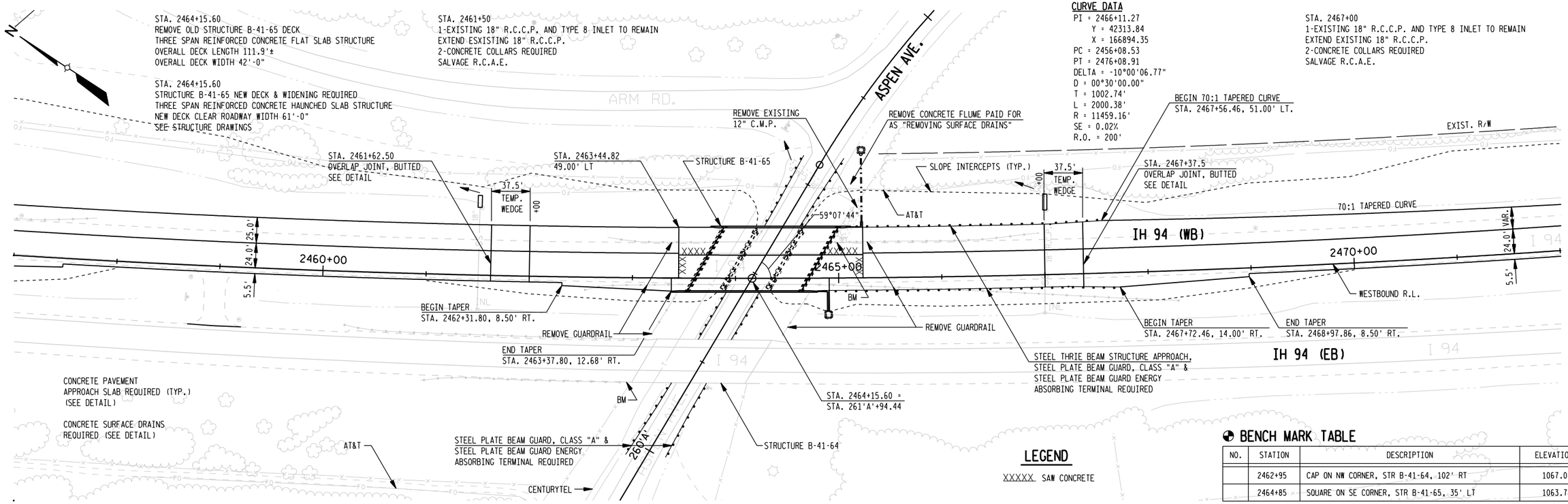

LEGEND
XXXXX SAW CONCRETE

BENCH MARK TABLE

NO.	STATION	DESCRIPTION	ELEVATION
	2462+95	CAP ON NW CORNER, STR B-41-64, 102' RT	1067.03
	2464+85	SQUARE ON SE CORNER, STR B-41-65, 35' LT	1063.78

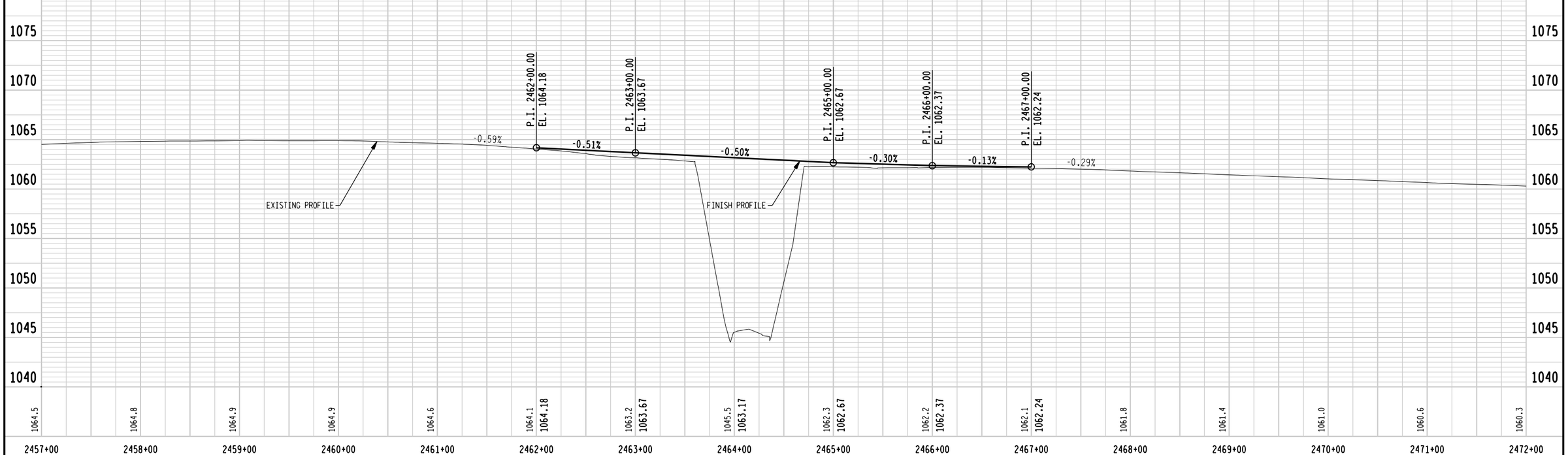

PROJECT NO.: 1023-05-75 & 1023-02-65	HWY: IH 94	COUNTY: JACKSON & MONROE	IH 94 (WB) PLAN AND PROFILE (AT ASPEN AVE.)	SHEET 129	E

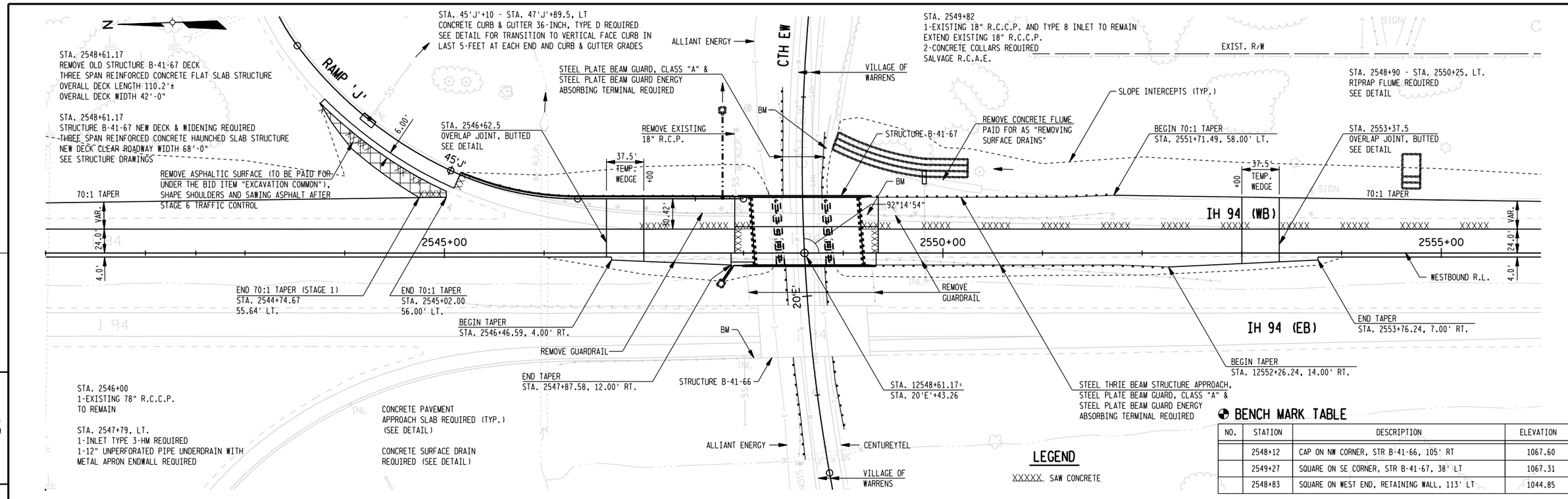

BENCH MARK TABLE

NO.	STATION	DESCRIPTION	ELEVATION
	2548+12	CAP ON NW CORNER, STR B-41-66, 105' RT	1067.60
	2549+27	SQUARE ON SE CORNER, STR B-41-67, 38' LT	1067.31
	2548+83	SQUARE ON WEST END, RETAINING WALL, 113' LT	1044.85

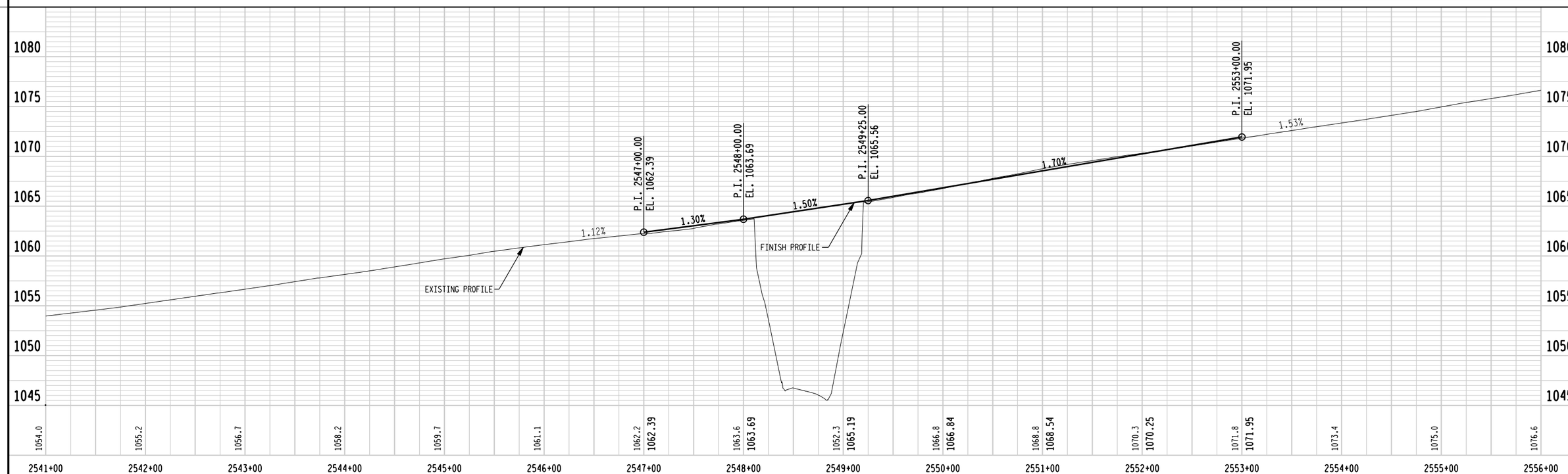

PROJECT NO.: 1023-05-75 & 1023-02-65	HWY: IH 94	COUNTY: JACKSON & MONROE	IH 94 (WB) PLAN AND PROFILE (AT CTH EW)	SHEET 130	E

Standard Detail Drawing List

08A5-16A	INLET COVERS TYPE A, H, A-S, & H-S
08A5-17C	INLET COVERS TYPE F, HM, HM-S, S, T, V, HM-GJ, & HM-GJ-S
08C1-5	INLETS TYPE 1, 2, 3 & 4
08D1-16	CONCRETE CURB, CONCRETE CURB AND GUTTER & PAVEMENT TIES
08D2-5	CONCRETE SURFACE DRAINS FLUME TYPE AT STRUCTURES
08D3-5	CONCRETE SURFACE DRAINS DROP INLET TYPE AT STRUCTURES
08E8-3	TYPICAL INSTALLATIONS OF EROSION BALES / TEMPORARY DITCH CHECKS
08E9-6	SILT FENCE
08E10-2	INLET PROTECTION TYPE A, B, C AND D
08F1-11	APRON ENDWALLS FOR CULVERT PIPE
08F4-6	JOINT TIES FOR CONCRETE PIPE
12A3-9	NAME PLATE (STRUCTURES)
13A5-3A	ASPHALTIC SHOULDER RUMBLE STRIP, MILLING
13A5-3B	ASPHALTIC SHOULDER RUMBLE STRIP, MILLING
13B2-5	CONCRETE PAVEMENT APPROACH SLAB
13C9-7A	CONCRETE PAVEMENT REPAIR AND REPLACEMENT
13C9-7B	CONCRETE PAVEMENT REPAIR AND REPLACEMENT
13C9-7C	CONCRETE PAVEMENT REPAIR AND REPLACEMENT
14B15-5A	STEEL PLATE BEAM GUARD, CLASS "A" INSTALLATION & ELEMENTS
14B15-5B	STEEL PLATE BEAM GUARD, CLASS "A" INSTALLATION & ELEMENTS
14B15-5C	STEEL PLATE BEAM GUARD, CLASS "A", POST MOUNTING ON PIER FOOTINGS AND CULVERTS
14B18-6A	STEEL PLATE BEAM GUARD, CLASS "A" (AT BRIDGES, OBSTACLES AND SIDEROADS/DRIVEWAYS)
14B20-6A	STEEL THRIE BEAM STRUCTURE APPROACH
14B20-6B	STEEL THRIE BEAM STRUCTURE APPROACH, CONNECTION TO SQUARE END AND VERTICAL FACED PARAPETS
14B24-4A	STEEL PLATE BEAM GUARD ENERGY ABSORBING TERMINAL
14B24-4B	STEEL PLATE BEAM GUARD ENERGY ABSORBING TERMINAL
14B24-4C	STEEL PLATE BEAM GUARD ENERGY ABSORBING TERMINAL
15A2-6	DELINEATOR POST, DELINEATOR BRACKET AND DELINEATOR
15A3-1	MARKER POSTS, FLEXIBLE, FOR CULVERT END
15A6-1	DELINEATOR LAYOUT
15B1-8A	FENCE WOVEN WIRE
15B1-8B	FENCE WOVEN WIRE
15C2-4A	BARRICADES AND SIGNS FOR MAINLINE CLOSURES
15C2-4B	BARRICADES AND SIGNS FOR MAINLINE CLOSURES
15C8-10A	PAVEMENT MARKING (MAINLINE)
15C8-11E	PAVEMENT MARKING (ISLANDS, STOP LINE & CROSS WALK)
15C8-10F	PAVEMENT MARKING (RAMPS & GORES)
15C11-5	FLEXIBLE TUBULAR MARKER POST, ANCHOR & BASES
15D3-1	TRAFFIC CONTROL, LANE CLOSURE, SPEEDS GREATER THAN 40 M.P.H. WITH BARRIER
15D12-2	TRAFFIC CONTROL, LANE CLOSURE, SPEEDS GREATER THAN 40 M.P.H.
15D15-1	TRAFFIC CONTROL, EXIT AND ENTRANCE RAMP WITHIN LANE CLOSURE
15D16-1	TRAFFIC CONTROL, EXIT RAMP CLOSURE
15D27-1	TRAFFIC CONTROL, SHOULDER CLOSURE ON DIVIDED ROADWAY, SPEEDS GREATER THAN 40 MPH

6

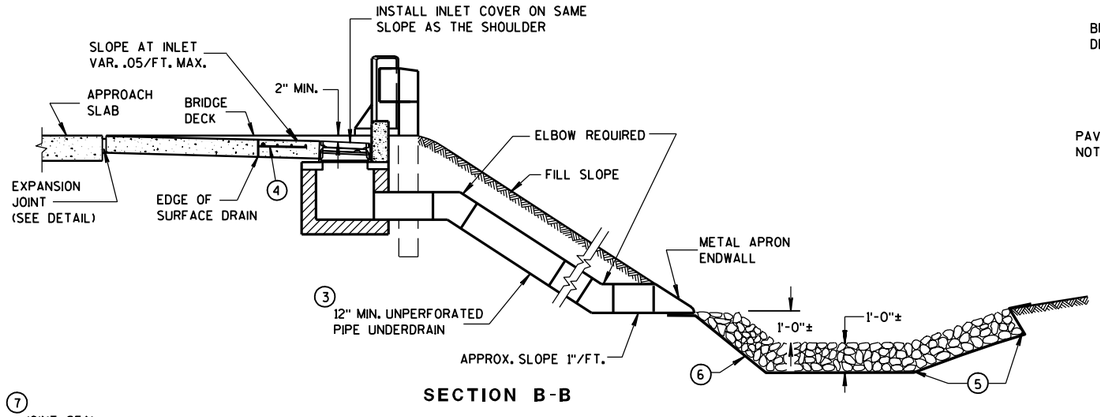

SECTION B-B

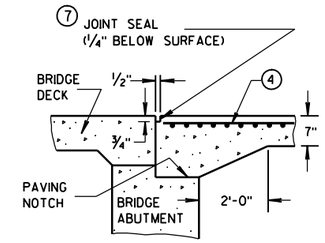

SECTION D-D

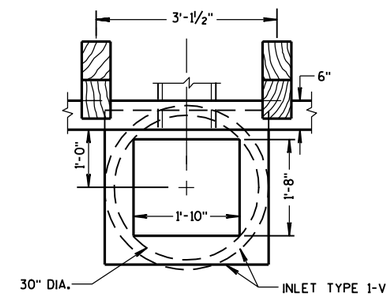

PLAN VIEW

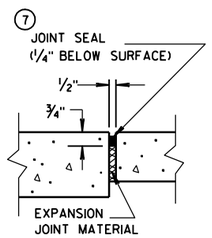

EXPANSION JOINT DETAIL

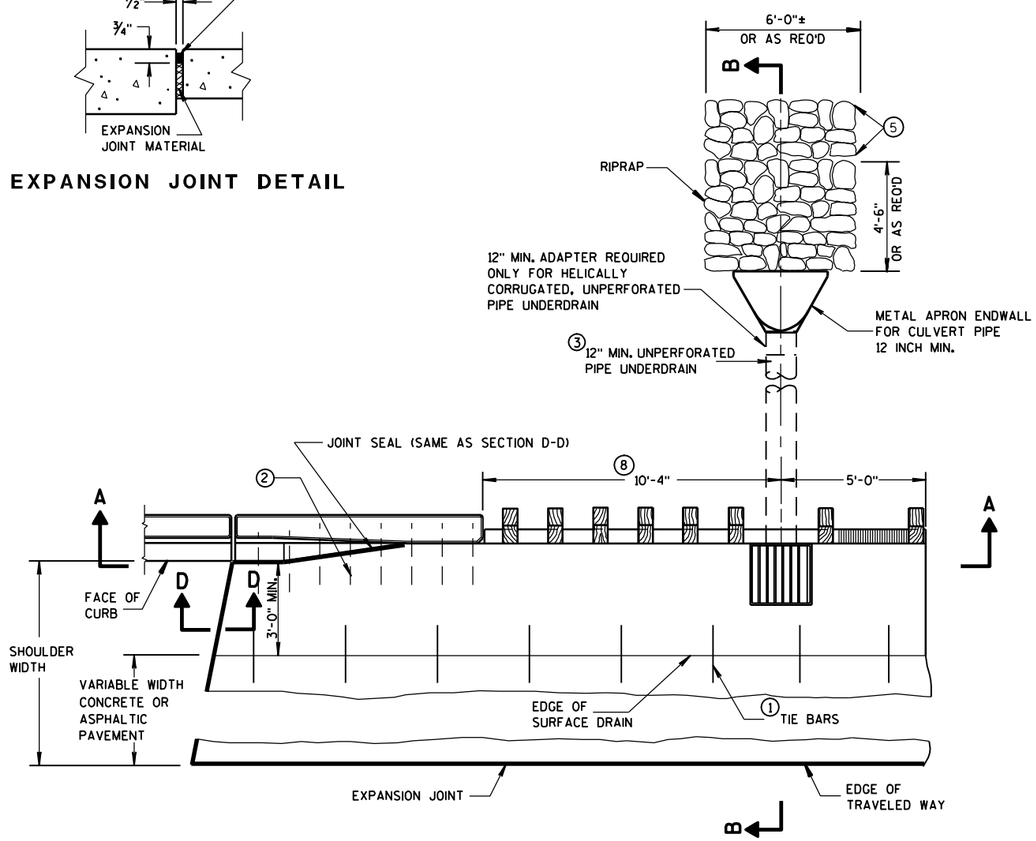

PLAN VIEW

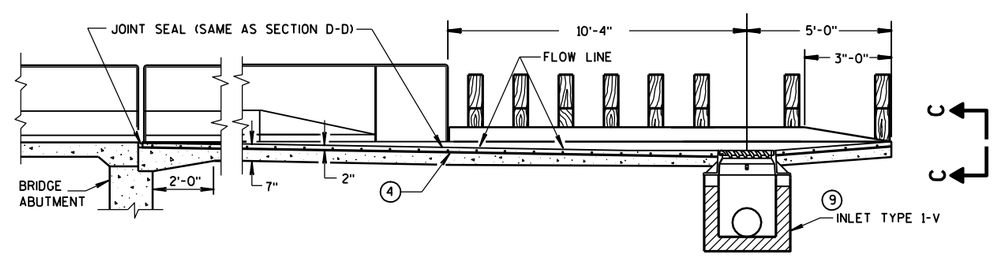

SECTION A-A

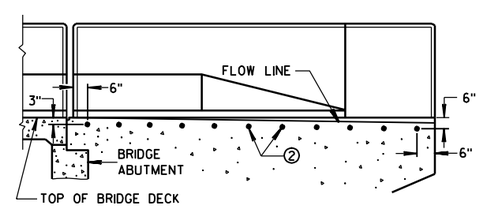

LOCATION OF TIE BARS IN WINGWALL

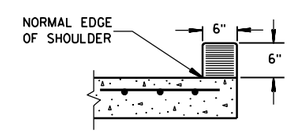

SECTION C-C

GENERAL NOTES

DETAILS OF CONSTRUCTION, MATERIALS, AND WORKMANSHIP NOT SHOWN ON THIS DRAWING SHALL CONFORM TO THE PERTINENT REQUIREMENTS OF THE STANDARD SPECIFICATIONS AND THE APPLICABLE SPECIAL PROVISIONS.

ALL STEEL REINFORCEMENT SHALL BE EMBEDDED 2 INCHES CLEAR UNLESS OTHERWISE SHOWN OR NOTED.

1. NO. 4 X 2'-0" TIE BARS SPACED AT 3'-0" CENTERS TO BE USED ONLY WHEN ADJACENT TO P.C. CONCRETE.
2. NO. 4 X 2'-0" TIE BARS SPACED AT 12" CENTERS TO BE PLACED BY BRIDGE CONTRACTOR, OR PAVEMENT TIES PLACED AS DIRECTED BY THE ENGINEER.
3. THE PIPE UNDERDRAIN MAY BE ANY ONE OF THE SIX MATERIALS LISTED IN THE STANDARD SPECIFICATIONS SECTION 612.2 EXCEPT DRAIN TILE.
4. MINIMUM REINFORCEMENT SHALL BE 6" X 6" - W4.0 X W4.0 OR NO. 3 BARS LONGITUDINAL AND TRANSVERSE SPACING 12" C-C.
5. LIMITS OF ADDITIONAL RIPRAP WHEN SPECIAL DITCH IS REQUIRED.
6. GEOTEXTILE FABRIC, TYPE 'R'
7. HOT POURED SEALANT UNLESS OTHERWISE SPECIFIED.
8. THIS DIMENSION MAY VARY DEPENDING ON THE SPACING OF POSTS FOR THE STEEL PLATE BEAM GUARD. THE TYPICAL LOCATION FOR THE SURFACE DRAIN IS WHERE THE POST SPACING WIDENS TO 3'-1 1/2".
9. SEE CURRENT STANDARD DETAIL DRAWINGS 8A5 AND 8C1 FOR DETAILS.

CONCRETE SURFACE DRAINS DROP INLET TYPE AT STRUCTURES

STATE OF WISCONSIN
DEPARTMENT OF TRANSPORTATION

APPROVED
12/17/07 — DATE
/S/ Jerry H. Zogg — ROADWAY STANDARDS DEVELOPMENT ENGINEER
FHWA

6

S.D.D. 8 D 3-5

6

S.D.D. 8 D 3-5

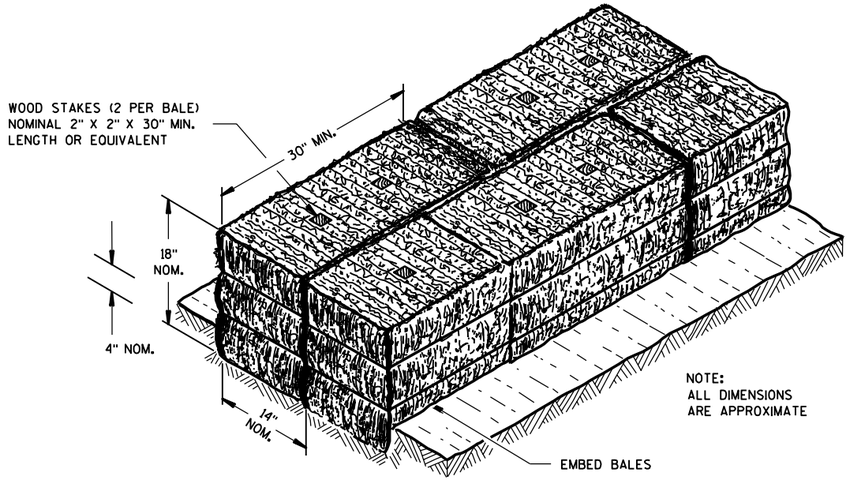

SECTION A-A

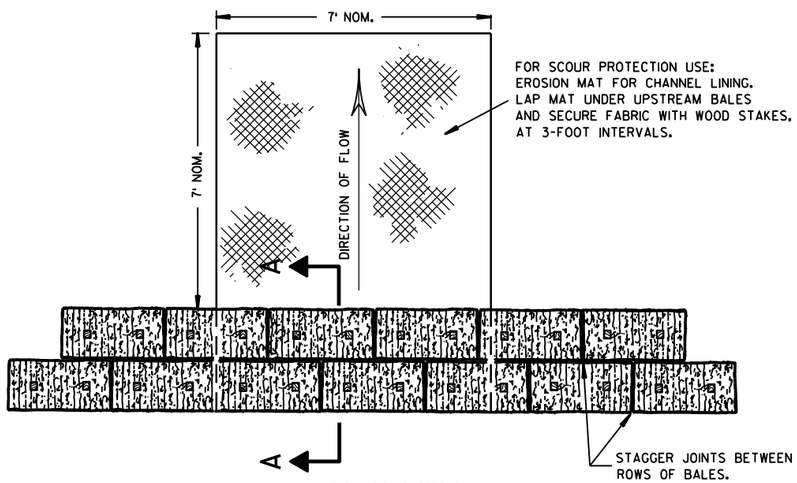

PLAN VIEW

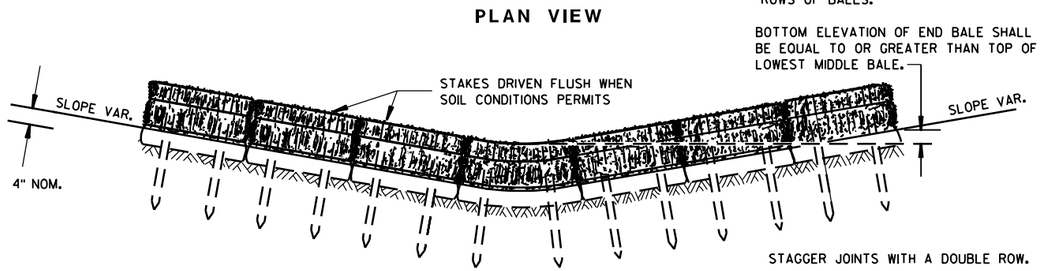

FRONT ELEVATION

TEMPORARY DITCH CHECK USING EROSION BALES ①

GENERAL NOTES

DETAILS OF CONSTRUCTION, MATERIALS AND WORKMANSHIP NOT SHOWN ON THIS DRAWING SHALL CONFORM TO THE PERTINENT REQUIREMENTS OF THE STANDARD SPECIFICATIONS AND THE APPLICABLE SPECIAL PROVISIONS.

① TEMPORARY DITCH CHECKS EITHER EROSION BALES OR MANUFACTURED SHALL BE PAID FOR UNDER THE BID ITEM OF TEMPORARY DITCH CHECK. THE DEPARTMENT WILL NOT PAY FOR TEMPORARY DITCH CHECKS CONSTRUCTED OF A SINGLE ROW OF EROSION BALES.

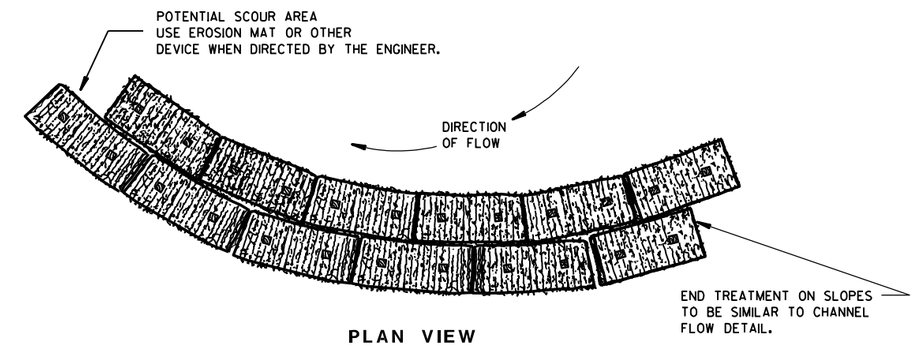

PLAN VIEW

WHEN ALTERING THE DIRECTION OF FLOW

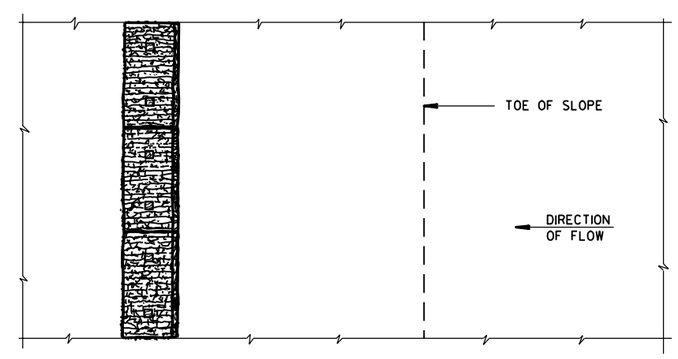

PLAN VIEW

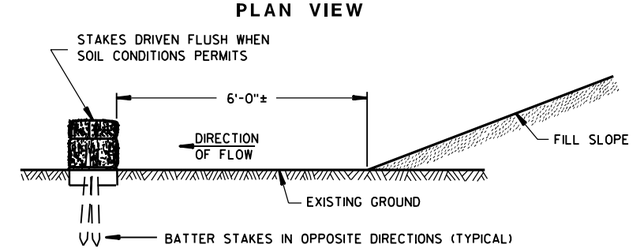

FRONT ELEVATION

WHEN EXISTING GROUND SLOPES AWAY FROM FILL SLOPE

EROSION BALES FOR SHEET FLOW

TYPICAL INSTALLATIONS OF EROSION BALES / TEMPORARY DITCH CHECKS

STATE OF WISCONSIN
DEPARTMENT OF TRANSPORTATION

APPROVED
6/04/02
DATE
CHIEF ROADWAY DEVELOPMENT ENGINEER
FHWA

6

S.D.D. 8 E 8-3

6

S.D.D. 8 E 8-3

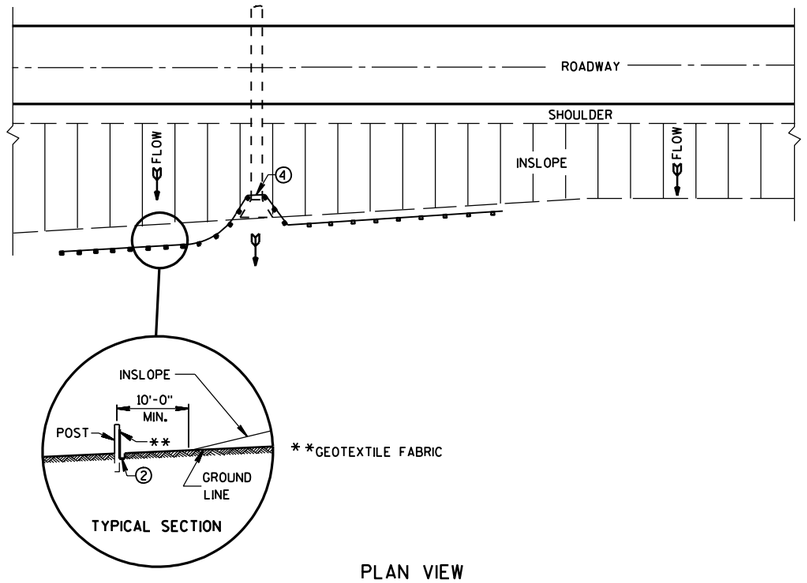

PLAN VIEW

TYPICAL APPLICATION OF SILT FENCE

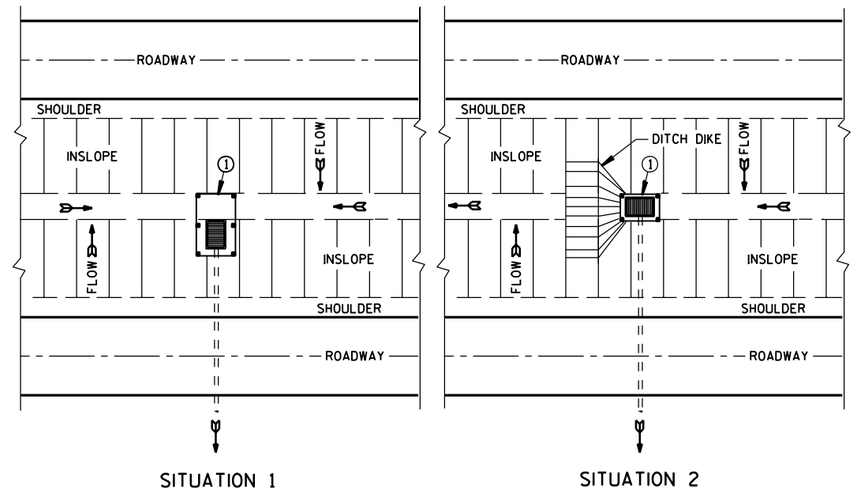

PLAN VIEW

SILT FENCE AT MEDIAN SURFACE DRAINS

GENERAL NOTES

DETAILS OF CONSTRUCTION NOT SHOWN ON THIS DRAWING SHALL CONFORM TO THE PERTINENT REQUIREMENTS OF THE STANDARD SPECIFICATIONS AND APPLICABLE SPECIAL PROVISIONS.

① HORIZONTAL BRACE REQUIRED WITH 2" X 4" WOODEN FRAME OR EQUIVALENT AT TOP OF POSTS.

② FOR MANUAL INSTALLATIONS THE TRENCH SHALL BE A MINIMUM OF 4" WIDE & 6" DEEP TO BURY AND ANCHOR THE GEOTEXTILE FABRIC. FOLD MATERIAL TO FIT TRENCH AND BACKFILL & COMPACT TRENCH WITH EXCAVATED SOIL.

③ WOOD POSTS SHALL BE A MINIMUM SIZE OF 1 1/8" X 1 1/8" OF OAK OR HICKORY.

④ SILT FENCE TO EXTEND ACROSS THE TOP OF THE PIPE.

⑤ CONSTRUCT SILT FENCE FROM A CONTINUOUS ROLL IF POSSIBLE BY CUTTING LENGTHS TO AVOID JOINTS. IF A JOINT IS NECESSARY USE ONE OF THE FOLLOWING TWO METHODS; A) OVERLAP THE END POSTS AND TWIST, OR ROTATE, AT LEAST 180 DEGREES, B) HOOK THE END OF EACH SILT FENCE LENGTH.

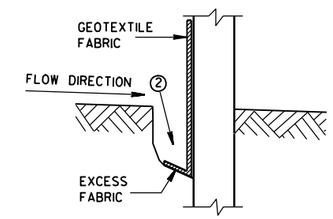

TRENCH DETAIL

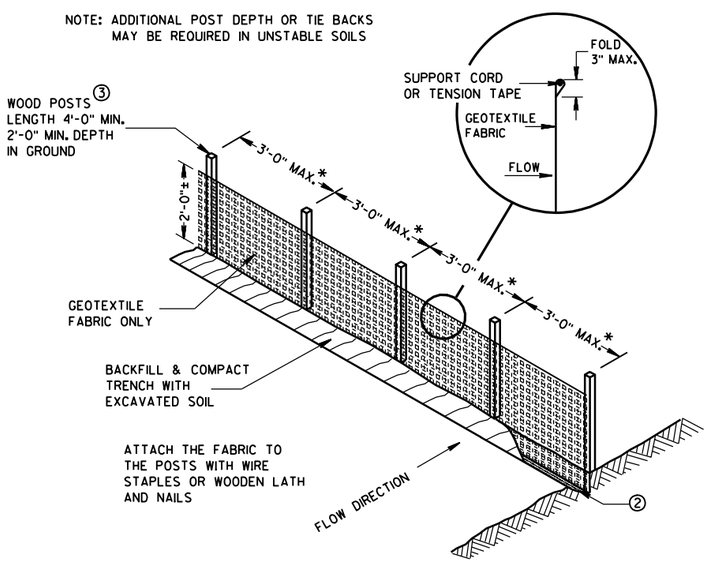

SILT FENCE

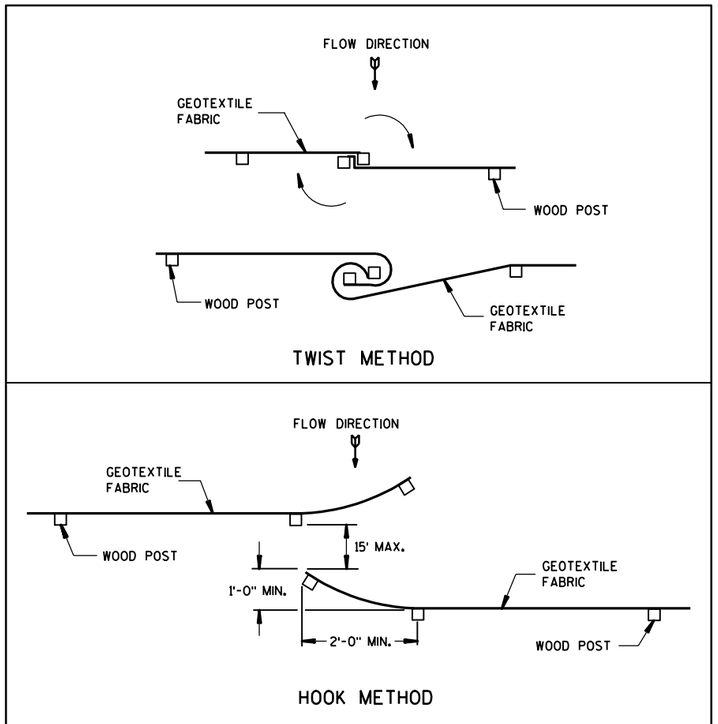

JOINING TWO LENGTHS OF SILT FENCE ⑤

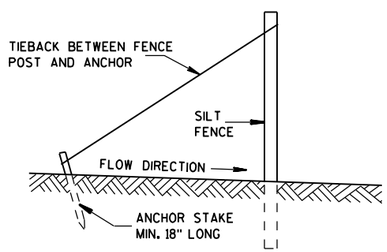

SILT FENCE TIE BACK

(WHEN REQUIRED BY THE ENGINEER)

6

SILT FENCE

STATE OF WISCONSIN
DEPARTMENT OF TRANSPORTATION

APPROVED
4-29-05
DATE
FHWA

CHIEF ROADWAY DEVELOPMENT ENGINEER

S.D.D. 8 E 9-6

S.D.D. 8 E 9-6

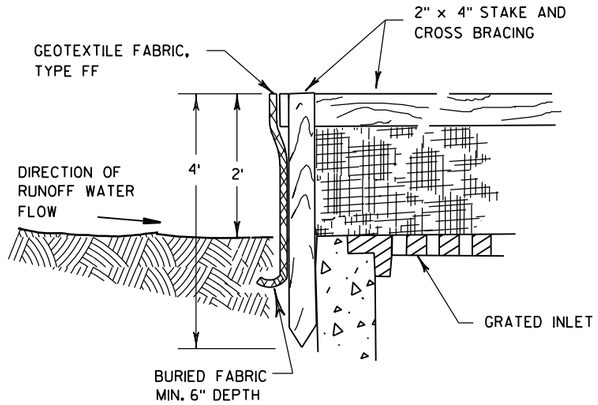

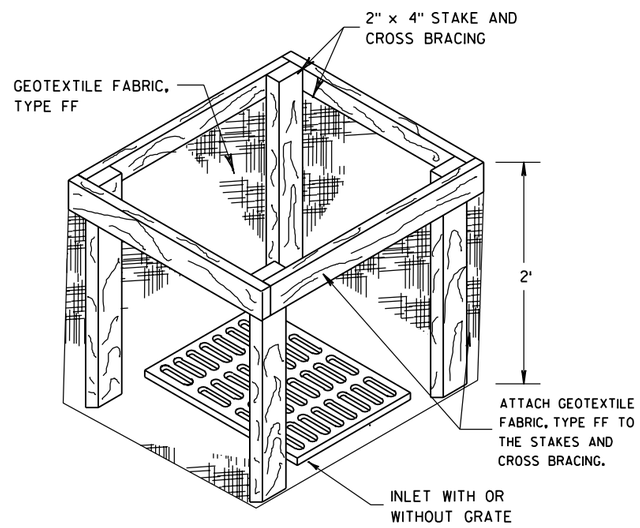

INLET PROTECTION, TYPE A

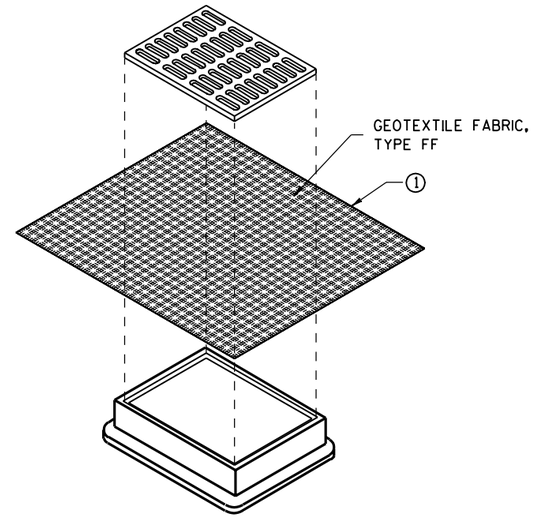

INLET PROTECTION, TYPE B (WITHOUT CURB BOX)

(CAN BE INSTALLED IN ANY INLET WITHOUT A CURB BOX)

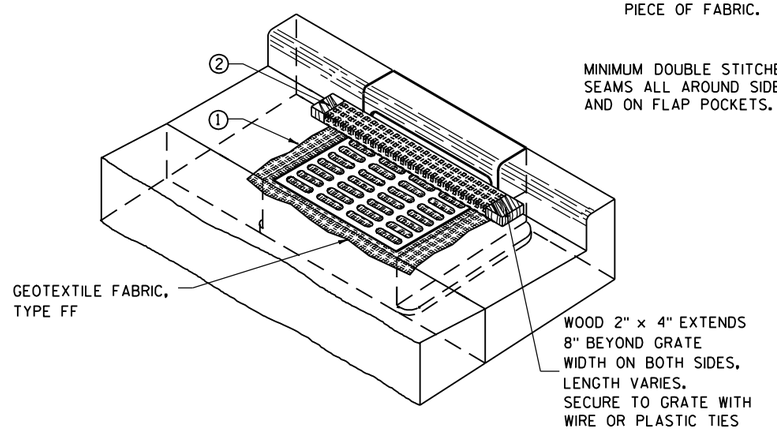

INLET PROTECTION, TYPE C (WITH CURB BOX)

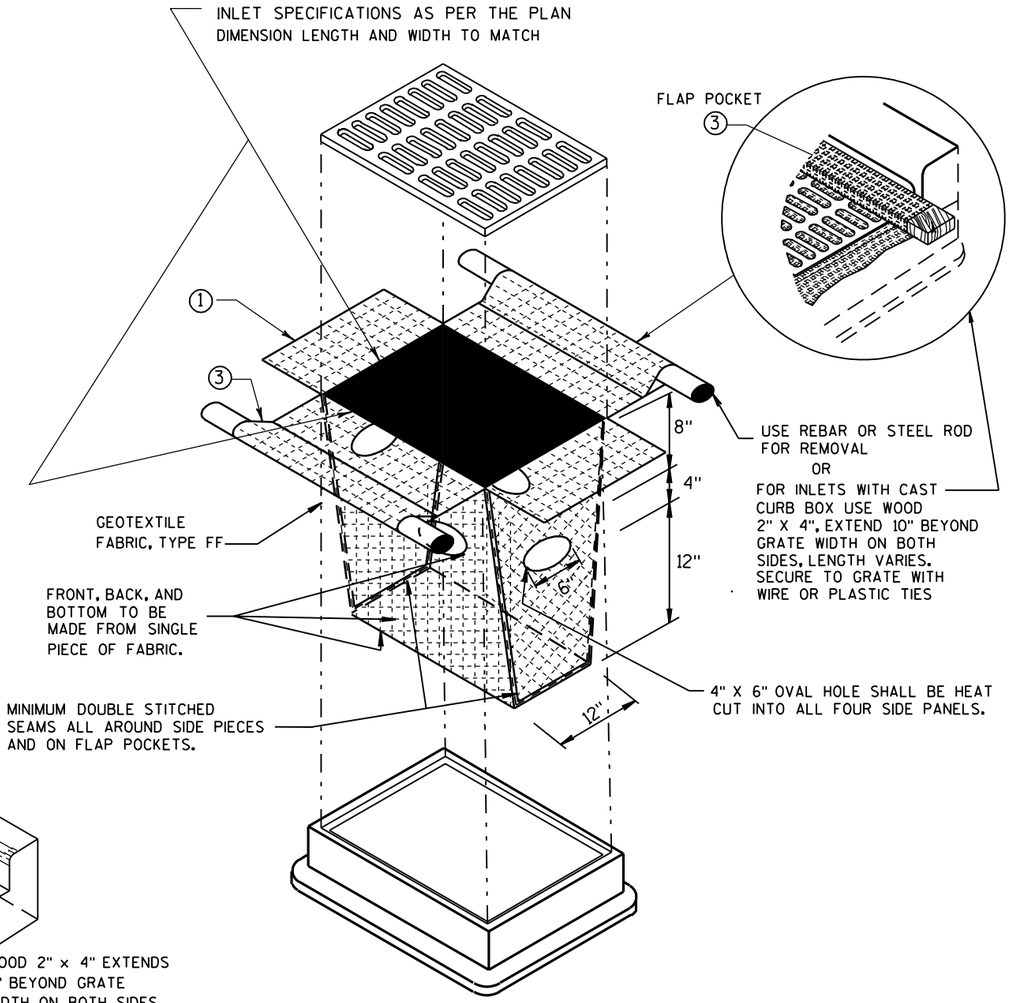

INLET PROTECTION, TYPE D

(CAN BE INSTALLED IN ANY INLET TYPE WITH OR WITHOUT A CURB BOX AS PER NOTE 2)

GENERAL NOTES

INLET PROTECTION DEVICES SHALL BE MAINTAINED OR REPLACED AT THE DIRECTION OF THE ENGINEER.

MANUFACTURED ALTERNATIVES APPROVED AND LISTED ON THE DEPARTMENT'S EROSION CONTROL PRODUCT ACCEPTABILITY LIST MAY BE SUBSTITUTED.

WHEN REMOVING OR MAINTAINING INLET PROTECTION, CARE SHALL BE TAKEN SO THAT THE SEDIMENT TRAPPED ON THE GEOTEXTILE FABRIC DOES NOT FALL INTO THE INLET. ANY MATERIAL FALLING INTO THE INLET SHALL BE REMOVED IMMEDIATELY.

1. FINISHED SIZE, INCLUDING FLAP POCKETS WHERE REQUIRED, SHALL EXTEND A MINIMUM OF 10" AROUND THE PERIMETER TO FACILITATE MAINTENANCE OR REMOVAL.
2. FOR INLET PROTECTION, TYPE C (WITH CURB BOX), AN ADDITIONAL 18" OF FABRIC IS WRAPPED AROUND THE WOOD AND SECURED WITH STAPLES. THE WOOD SHALL NOT BLOCK THE ENTIRE HEIGHT OF THE CURB BOX OPENING.
3. FLAP POCKETS SHALL BE LARGE ENOUGH TO ACCEPT WOOD 2X4.

INSTALLATION NOTES

TYPE B & C

TRIM EXCESS FABRIC IN THE FLOW LINE TO WITHIN 3" OF THE GRATE.

THE CONTRACTOR SHALL DEMONSTRATE A METHOD OF MAINTENANCE, USING A SEWN FLAP, HAND HOLDS OR OTHER METHOD TO PREVENT ACCUMULATED SEDIMENT FROM ENTERING THE INLET.

TYPE D

DO NOT INSTALL INLET PROTECTION TYPE D IN INLETS SHALLOWER THAN 30", MEASURED FROM THE BOTTOM OF THE INLET TO THE TOP OF THE GRATE.

TRIM EXCESS FABRIC IN THE FLOW LINE TO WITHIN 3" OF THE GRATE.

THE INSTALLED BAG SHALL HAVE A MINIMUM SIDE CLEARANCE, BETWEEN THE INLET WALLS AND THE BAG, MEASURED AT THE BOTTOM OF THE OVERFLOW HOLES, OF 3". WHERE NECESSARY THE CONTRACTOR SHALL CINCH THE BAG, USING PLASTIC ZIP TIES, TO ACHIEVE THE 3" CLEARANCE. THE TIES SHALL BE PLACED AT A MAXIMUM OF 4" FROM THE BOTTOM OF THE BAG.

INLET PROTECTION TYPE A, B, C, AND D

STATE OF WISCONSIN
DEPARTMENT OF TRANSPORTATION

APPROVED
10/16/02
DATE
FHWA

CHIEF ROADWAY DEVELOPMENT ENGINEER

6

S.D.D. 8 E 10-2

GENERAL NOTES

DETAILS OF CONSTRUCTION SHOWN ON THIS DRAWING SHALL CONFORM TO THE PERTINENT REQUIREMENTS OF THE STANDARD SPECIFICATIONS AND APPLICABLE SPECIAL PROVISIONS.

RUMBLE STRIPS ON EXPRESSWAYS

DO NOT INSTALL RUMBLE STRIPS ACROSS SIDE ROAD INTERSECTIONS, COMMERCIAL DRIVEWAYS OR ADJACENT TO RIGHT TURN LANES, LEFT TURN LANES OR TURN LANE TAPERS. THE ATTACHED STANDARD DETAIL DRAWING SHOWS THE LOCATION OF THE RUMBLE STRIPS AT INTERCHANGE AREAS.

(1) 2'-6" FOR MEDIAN SHOULDERS THAT HAVE A PAVED WIDTH OF 5'-0" OR MORE.

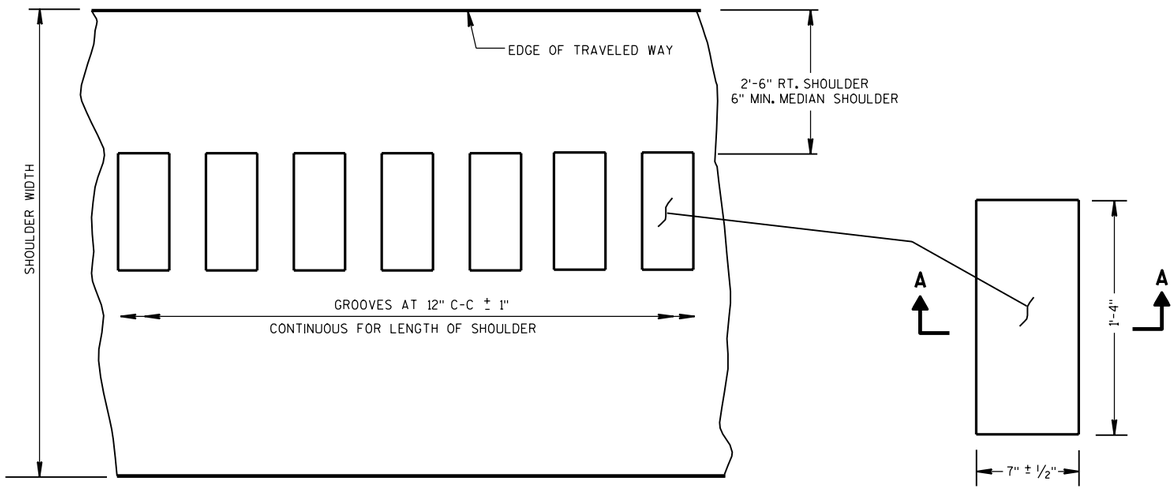

PLAN VIEW
SHOULDER WITH GROOVES

PLAN VIEW
(SINGLE GROOVE)

PLACEMENT DETAIL FOR MILLED RUMBLE STRIP

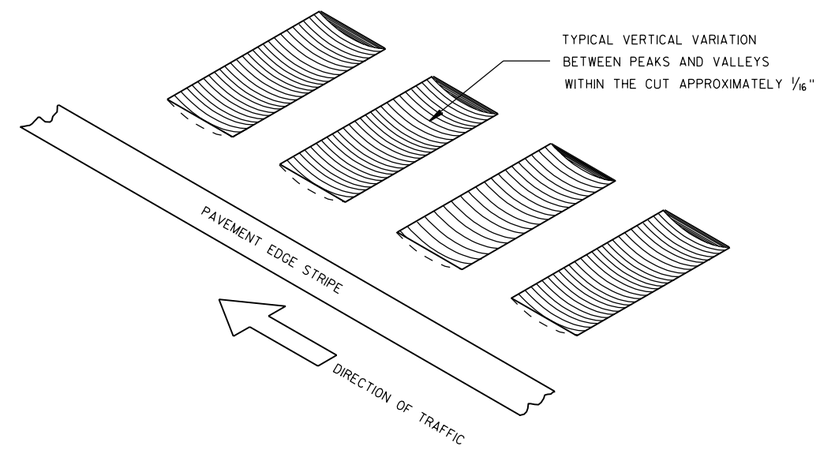

ISOMETRIC

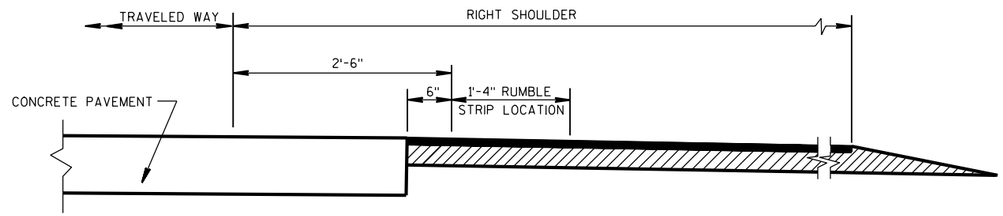

SECTION VIEW
CONCRETE PAVEMENT EXTENDS INTO RIGHT SHOULDER)

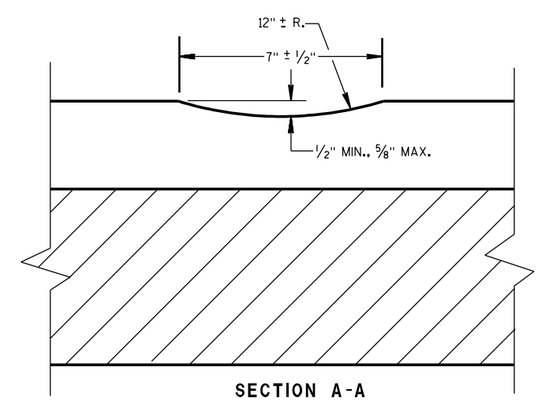

SECTION A-A

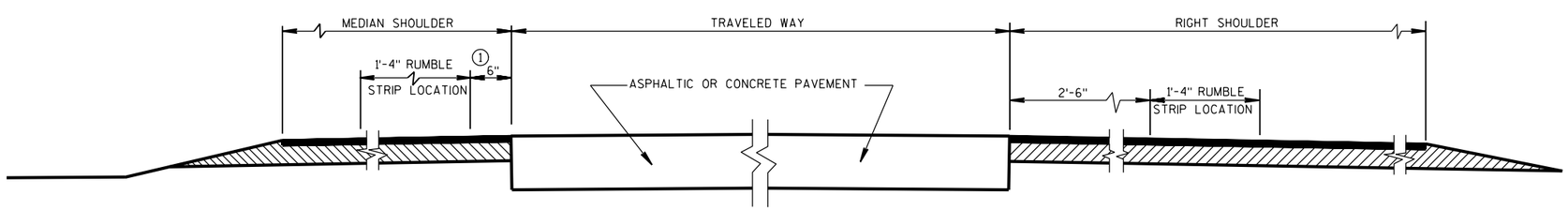

SECTION VIEW

TYPICAL LOCATIONS OF ASPHALTIC SHOULDER RUMBLE STRIPS
IN RURAL DIVIDED HIGHWAYS

(ONE ROADWAY IS SHOWN)

ASPHALTIC SHOULDER
RUMBLE STRIP, MILLING

STATE OF WISCONSIN
DEPARTMENT OF TRANSPORTATION

6

S.D.D. 13 A 5-3a

6

S.D.D. 13 A 5-3a

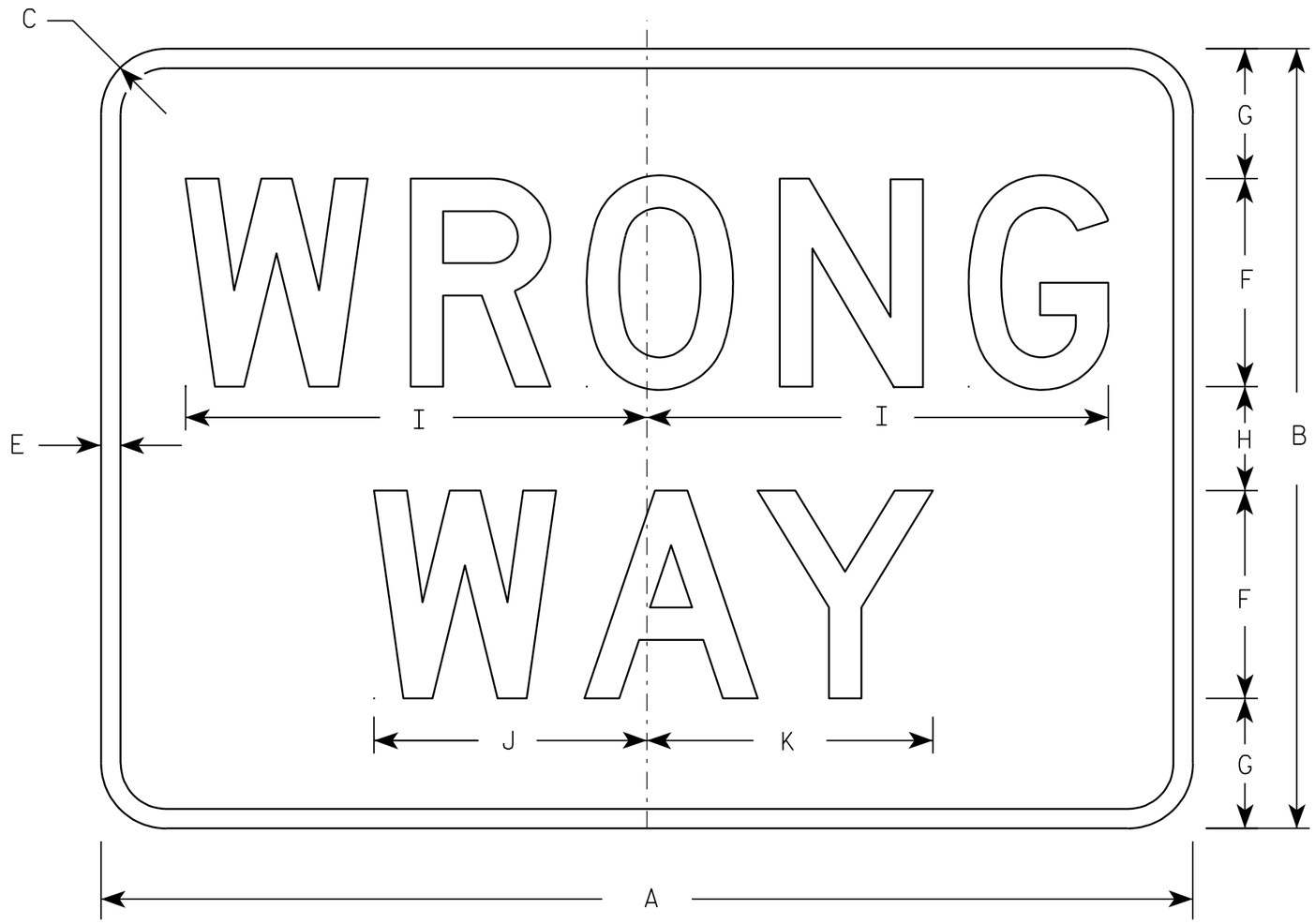

R5-1A

NOTES

1. Sign is Type II - Type H Reflective - reference WIS DOT Standard Specification for HIGHWAY and STRUCTURE CONSTRUCTION latest edition.
2. Color:
   Background - Red
   Message - White
3. Message Series - D
4. Corners may be square or rounded when base material is plywood but borders shall be rounded as shown. When base material is metal, the corners and borders shall be rounded.

Metric equivalent for this sign is:

SIZE	
1	750 mm X 450 mm
2	900 mm X 600 mm
3	1050 mm X 750 mm
4	1050 mm X 750 mm
5	1050 mm X 750 mm

SIZE	A	B	C	D	E	F	G	H	I	J	K	L	M	N	O	P	Q	R	S	T	U	V	W	X	Y	Z	Area sq. ft.	Area m2
1	30	18	1 1/2		1/2	5	3	2	11	6 1/2	6 7/8																3.75	0.34
2	36	24	2		5/8	6	4 1/2	3	13 1/4	7 7/8	8 1/4																6.00	0.54
3	42	30	2 1/2		3/4	8	5	4	17 3/4	10 1/2	11																8.75	0.79
4	42	30	2 1/2		3/4	8	5	4	17 3/4	10 1/2	11																8.75	0.79
5	42	30	2 1/2		3/4	8	5	4	17 3/4	10 1/2	11																8.75	0.79

STANDARD SIGN
R5-1A

WISCONSIN DEPT OF TRANSPORTATION

APPROVED Matthew R Rauch
for State Traffic Engineer

DATE 10/24/02 PLATE NO. R5-1A.1

PROJECT NO: | HWY: | COUNTY: | SHEET NO: 219 | E

STATE PROJECT NUMBER	SHEET NO.
1023-02-65	

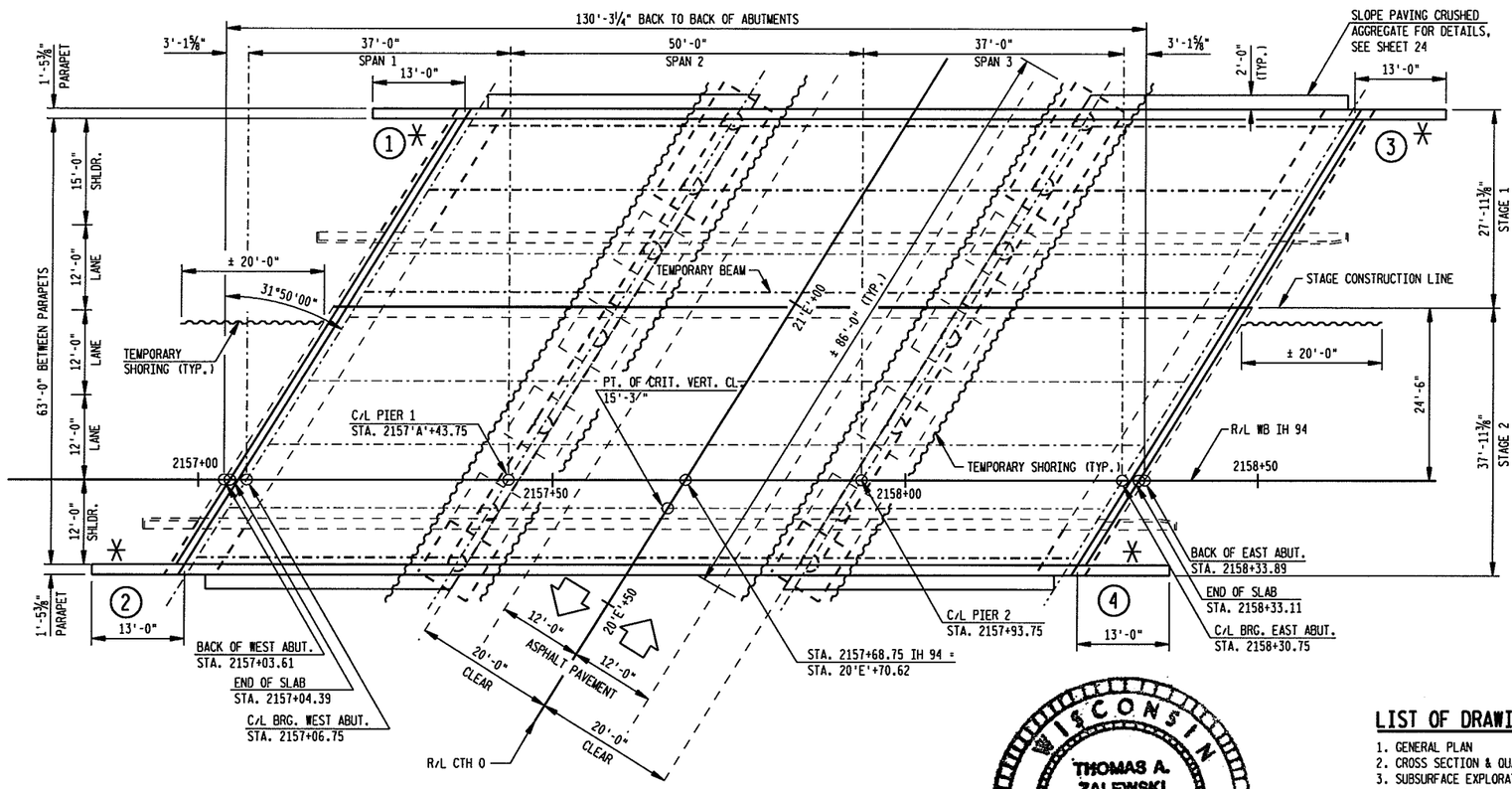

PLAN
3 SPAN - 27" STEEL GIRDERS

✳ PROVIDE FOR THRIE BEAM RAIL ATTACHMENT

(X) INDICATES WING NUMBER

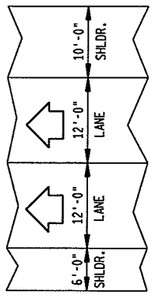

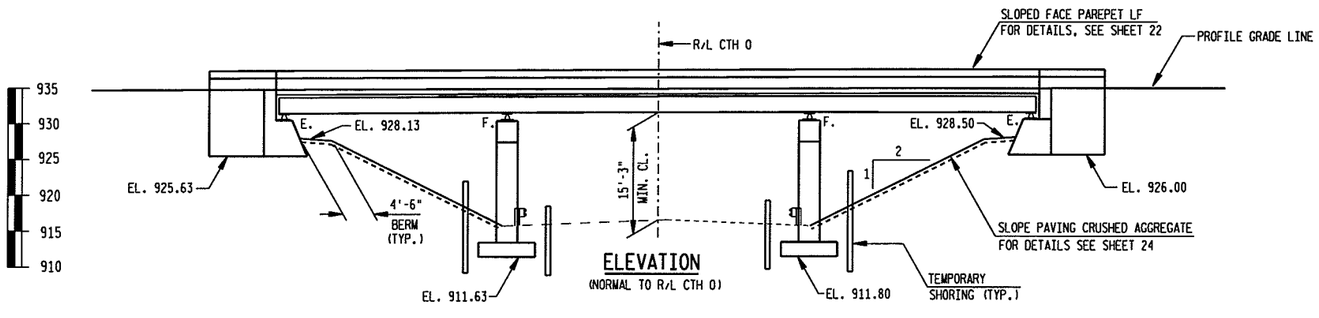

ELEVATION
(NORMAL TO R/L CTH O)

WISCONSIN THOMAS A. ZALEWSKI E-26972 Madison WI PROFESSIONAL ENGINEER
8/1/08

LIST OF DRAWINGS

1. GENERAL PLAN
2. CROSS SECTION & QUANTITIES
3. SUBSURFACE EXPLORATION
4. CONSTRUCTION STAGING
5. CONSTRUCTION STAGING
6. WEST ABUTMENT
7. WEST ABUTMENT DETAILS
8. EAST ABUTMENT
9. EAST ABUTMENT DETAILS
10. PIERS
11. PIER DETAILS
12. BEARING DETAILS
13. CONCRETE SHIM DETAILS
14. GIRDER DETAILS
15. FRAMING PLAN
16. DIAPHRAGMS
17. SUPERSTRUCTURE
18. SUPERSTRUCTURE
19. SUPERSTRUCTURE
20. EXPANSION DEVICE
21. EXPANSION DEVICE
22. SLOPED FACE PARAPET 'LF'
23. BAR COUPLER DETAILS
24. SLOPE PAVING DETAILS

NOTE

STAGE 1 = STAGE 3 IN THE ROADWAY PLANS
AND STAGE 2 = STAGE 5 IN THE ROADWAY PLANS

BENCH MARK TABLE

NO.	STATION	DESCRIPTION	ELEV.
1	2158+63.43	SQUARE ON SW CORNER, STR B-27-60 35.17' RT	936.54
2	2156+43.53	DISK ON NW CORNER, STR B-27-59 95.04' RT	937.52

DESIGN DATA

LIVELOAD

DESIGN RATING: HS20
INVENTORY RATING: HS24
OPERATIONAL RATING: HS40
WAX. STANDARD PERMIT VEHICLE LOAD: 250 KIPS
STRUCTURE IS DESIGNED FOR A FUTURE WEARING SURFACE OF 20 PSF

ULTIMATE DESIGN STRESSES

CONCRETE MASONRY - SLAB ——— f'c = 4,000 PSI
- ALL OTHER ——— f'c = 3,500 PSI

HIGH-STRENGTH BAR STEEL REINFORCEMENT, GRADE 60 ——— fy = 60,000 PSI

STRUCTURAL CARBON STEEL (A.S.T.M. A709 GRADE 36) ——— fy = 36,000 PSI

HIGH STRENGTH STRUCTURAL STEEL (A.S.T.M. A709 GRADE 50) ——— fy = 50,000 PSI

EXISTING ULTIMATE DESIGN STRESSES

CONCRETE MASONRY - ABUTS/PIERS ——— f'c = 2,500 PSI

BAR STEEL REINFORCEMENT ——— fy = 40,000 PSI

STRUCTURAL CARBON STEEL ——— f'c = 33,000 PSI

FOUNDATION DATA

ABUTMENTS TO BE FOUNDED ON SPREAD FOOTINGS AT A MINIMUM VALUE OF 3500 PSF.

PIERS TO BE FOUNDED ON SPREAD FOOTINGS AT A MINIMUM VALUE OF 5000 PSF.

ALL EXCAVATED SURFACES ABUTMENTS AND PIERS SHALL BE THOROUGHLY COMPACTED PRIOR TO PLACING CONCRETE TO AT LEAST 95% OF MAXIMUM DRY DENSITY IN ACCORDANCE WITH AASHTO TEST DESIGNATION T180.

TRAFFIC DATA

WB IH 94
A.D.T. (2008) = 32,000
A.D.T. (2028) = 42,000
DESIGN SPEED = 70 MPH

BRIDGE OFFICE CONTACT:
BILL DREHER (608) 261-8205

EARTH TECH, INC.
1210 FOURIER DRIVE, SUITE 100
MADISON, WISCONSIN 53717
(608) 836-9800
EARTH TECH PROJECT NO. 100761

No.	Date	Revision	By

EarthTech
A TYCO International Ltd. Company

STATE OF WISCONSIN
DEPARTMENT OF TRANSPORTATION

STRUCTURE B-27-60

IH 94 OVER CTH O

County JACKSON		Town MILLSTON	
Design Spec. A.A.S.H.T.O. 2002		Load HS25	Const. Spec. WIS. 2009
Designed By ETP	Design Checked TAZ	Drawn By EJT	Plans Checked TAZ
Approved		State Bridge Engineer	8-26-08 Date

GENERAL PLAN

SHEET 1 OF 24

8

8

PRINTER DRIVER: L:\library\TPNLCADstds\Workspace-Clients\WisDOT\Microstation\Resources\WS_Printing\Printer_Drivers\EI_PDF_11 x 17.plt
PEN TABLE: L:\work\projects\10076\Cadd\V8\B-27-60\01-060-GENPLAN1.tbl
FILE NAME: L:\work\projects\10076\Cadd\V8\B-27-60\01-060-GENPLAN1.dgn
PLOT DATE: 7/30/2008 PLOT TIME: 10:08:50 AM
BATCH PRINT SHEET OF

STATE PROJECT NUMBER	SHEET NO.
1023-02-65	

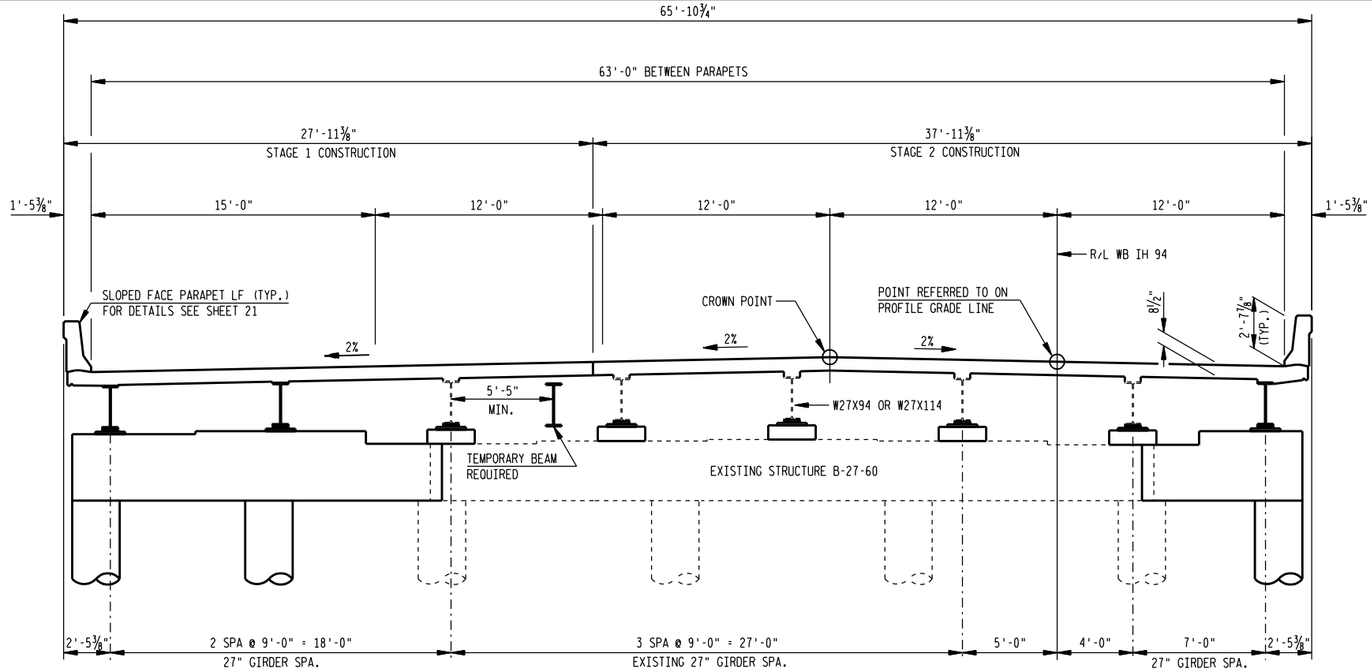

CROSS SECTION THRU ROADWAY - IH 94 (WB)

(LOOKING EAST)

TOTAL ESTIMATED QUANTITIES

BID ITEM	UNIT	WEST ABUTMENT	PIER 1	PIER 2	EAST ABUTMENT	SUPER.	TOTAL
REMOVING OLD STRUCTURE, STATION 2157'A'+68.75	LS	—	—	—	—	—	1
DEBRIS CONTAINMENT STRUCTURE B-27-60	LS	—	—	—	—	—	1
EXCAVATION FOR STRUCTURES BRIDGES B-27-60	LS	—	—	—	—	—	1
TEMPORARY SHORING	SF	200	1,290	1,290	200	—	2,980
BACKFILL STRUCTURE	CY	160	100	100	160	—	520 ★
CONCRETE MASONRY BRIDGES	CY	70	40	40	70	260	480
MASONRY ANCHORS TYPE L NO. 6 BARS	EACH	28	30	30	28	—	116
MASONRY ANCHORS TYPE S 5/8-INCH	EACH	54	—	—	54	—	108
BAR STEEL REINFORCEMENT HS BRIDGES	LB	2,630	4,850	4,850	2,710	—	15,040
BAR STEEL REINFORCEMENT HS COATED BRIDGES	LB	2,352	—	—	2,372	63,240	67,964 ★
BAR COUPLERS NO. 5	EACH	5	—	—	5	432	442
STRUCTURAL STEEL CARBON	LB	—	—	—	—	11,460	11,460
STRUCTURAL STEEL HS	LB	—	—	—	—	40,670	40,670
WELDED STUD SHEAR CONNECTORS 7/8 X 4-INCH	EACH	—	—	—	—	384	384
WELDED STUD SHEAR CONNECTORS 7/8 X 5-INCH	EACH	—	—	—	—	384	384
WELDED STUD SHEAR CONNECTORS 7/8 X 6-INCH	EACH	—	—	—	—	256	256
BEARING ASSEMBLIES FIXED STRUCTURE B-27-60	EACH	—	3	3	—	—	6
BEARING ASSEMBLIES EXPANSION STRUCTURE B-27-60	EACH	3	—	—	3	—	6
BEARING REPLACEMENT STRUCTURE B-27-60	EACH	5	5	5	5	—	20
CONCRETE SURFACE REPAIR	SF	—	—	—	—	—	10
RUBBERIZED MEMBRANE WATERPROOFING	SY	9	—	—	9	—	17
PREPARATION AND COATING OF TOP FLANGES	LS	—	—	—	—	—	1
SLOPE PAVING CRUSHED AGGREGATE	SY	189	—	—	189	—	378
PIPE UNDERDRAIN 6-INCH	LF	100	—	—	100	—	200
PIPE UNDERDRAIN UNPERFORATED 6-INCH	LF	20	—	—	20	—	40
ANCHOR ASSEMBLIES FOR STEEL PLATE BEAM GUARD	EACH	2	—	—	2	—	4
GEOTEXTILE FABRIC TYPE DF SCHEDULE A	SY	83	—	—	83	—	166
CONSTRUCTION STAKING STRUCTURE LAYOUT B-27-60	LS	—	—	—	—	—	1
CONCRETE SHIMS ABUTMENTS (B-27-60)	EACH	4	—	—	4	—	8
CONCRETE SHIMS PIERS (B-27-60)	EACH	—	5	5	—	—	10
ADJUSTING DIAPHRAMS	EACH	—	—	—	—	32	32
TEMPORARY BEAM	LF	—	—	—	—	125	125
PAINTING EPOXY SYSTEM STRUCTURE B-27-60	LS	—	—	—	—	—	1
RESEAL CRUSHED AGGREGATE SLOPE PAVING	SY	101	—	—	101	—	202
NON-BID ITEMS							
FILLER	SIZE	—	—	—	—	—	1/2" & 3/4"

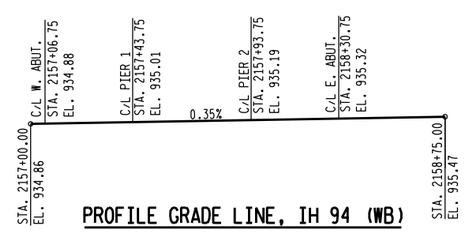

PROFILE GRADE LINE, IH 94 (WB)

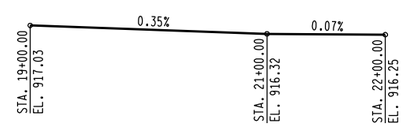

PROFILE GRADE LINE, CTH O

GENERAL NOTES

DRAWINGS SHALL NOT BE SCALED.

BAR STEEL REINFORCEMENT SHALL BE EMBEDDED 2" CLEAR UNLESS SHOWN OR NOTED OTHERWISE.

FILLER SHALL CONFORM TO THE REQUIREMENTS OF A.A.S.H.T.O. DESIGNATION M153, TYPES I, II, OR III OR M213.

THE FIRST DIGIT OF THE THREE DIGIT AND THE FIRST TWO DIGITS OF A FOUR DIGIT BAR MARK SIGNIFIES THE BAR SIZE.

THE EXISTING GROUND LINE SHALL BE THE UPPER LIMITS OF EXCAVATION FOR STRUCTURES.

AT ABUTMENTS, ALL EXCAVATED VOLUME NOT OCCUPIED BY THE NEW STRUCTURE SHALL BE BACKFILLED WITH BACKFILL STRUCTURE.

ALL STATIONS AND ALL ELEVATIONS ARE IN FEET.

DIMENSIONS SHOWN ARE BASED ON THE ORIGINAL STRUCTURE PLANS.

CLEAN, STRAIGHTEN, AND EXTEND EXISTING BAR STEEL REINFORCEMENT INTO NEW CONSTRUCTION WHERE SHOWN.

ROUGHEN SURFACE OF CONCRETE ¼" DEEP MIN. ALL AREAS OF NEW TO EXISTING CONCRETE CONTACT AT ABUTMENTS AND PIER CAPS.

THE MINIMUM CONCRETE HAUNCH SHALL BE 1¼" FOR DESIGN CALCULATION AND THE HAUNCH CONCRETE QUANTITY IS BASED ON AN AVERAGE DEPTH OF 2½" WHICH IS THE MAXIMUM HAUNCH QUANTITY FOR WHICH THE CONTRACTOR WILL BE PAID.

VARIATIONS TO THE NEW GRADE LINE OVER ¼" MUST BE SUBMITTED BY THE FIELD ENGINEER TO THE STRUCTURES DESIGN FOR REVIEW.

THE EXISTING ABUTMENTS AND PIERS TO REMAIN IN PLACE ARE SHOWN AND INCORPORATED INTO NEW CONSTRUCTION.

CONCRETE SURFACE REPAIR SHALL BE UNDISTRIBUTED AND DETERMINED BY THE ENGINEER.

THE EXISTING STRUCTURE (B-27-60) IS A 3 SPAN 27" STEEL GIRDER BRIDGE, 130.3'± LONG x 42'± WIDE.

THE SUBSTRUCTURE AND SUPERSTRUCTURE SHALL BE WIDENED BY ADDING TWO GIRDER LINES TO THE OUTSIDE SHOULDER SIDE, ONE GIRDER LINE TO THE INSIDE SHOULDER SIDE OF THE BRIDGE AND THE ENTIRE DECK AND PARAPETS SHALL BE REPLACED.

CONTRACTOR SHALL DESIGN TEMPORARY BEAM.

THE TEMPORARY BEAM SHALL PROVIDED FOR THE CONCRETE SLAB DURING STAGE I CONSTRUCTION UNTIL THE SLAB FOR STAGE II CONSTRUCTION HAS BEEN POURED AND SUFFICIENTLY CURED.

ALL STRUCTURAL STEEL FOR THE GIRDERS AND SPLICE PLATES SHALL BE HIGH STRENGTH STRUCTURAL STEEL CONFORMING TO THE REQUIREMENTS OF A.S.T.M. A709, GRADE 50. ALL OTHER STRUCTURAL STEEL SHALL BE STRUCTURAL CARBON STEEL, A.S.T.M. A709, GRADE 36.

THE QUANTITY FOR BID ITEM "CONCRETE SURFACE REPAIR" IS UNDISTRIBUTED. THE ENGINEER WILL DETERMINE THE LOCATIONS FOR THIS BID ITEM.

★ THE CONCRETE AND BARS OF THE PARAPET ON THE WINGWALLS ARE INCLUDED IN THE ABUTMENT QUANTITIES. SUPERSTRUCTURE QUANTITIES INCLUDE THE CONCRETE AND REINFORCEMENT OF THE PARAPET ON THE DECK.

No.	Date	Revision	By

STATE OF WISCONSIN
DEPARTMENT OF TRANSPORTATION

STRUCTURE B-27-60

Const. Spec.	WIS. 2009	Drawn By	EAS	Plans Checked	TAZ

CROSS SECTION & NOTES

SHEET 2 OF 24

PRINTER DRIVER: L:\library\TPN_CADstds\Workspace-Clients\WisDOT\Microstation\Resources\WS_Printing\Printer_Drivers\ET_PDF_11 x 17.plt
PEN TABLE: L:\work\projects\100761\Cadd\V8\B-27-60\WS_Printing\Pen_Tables\ET_WisDOT.tbl
FILE NAME: L:\work\projects\100761\Cadd\V8\B-27-60\02-060-GENPLAN2.dgn
PLOT DATE: 8/1/2008 PLOT TIME: 4:06:31 PM
BATCH PRINT SHEET OF
8
8

BORINGS PERFORMED BY:
SOILS & ENGINEERING SERVICES, INC.
1102 STEWART STREET
MADISON, WI 53713

BORING 1 DRILL DATE: 7/13/07
BORING 2 DRILL DATE: 7/16/07
BORING 3 DRILL DATE: 7/16/07
BORING 4 DRILL DATE: 7/12/07

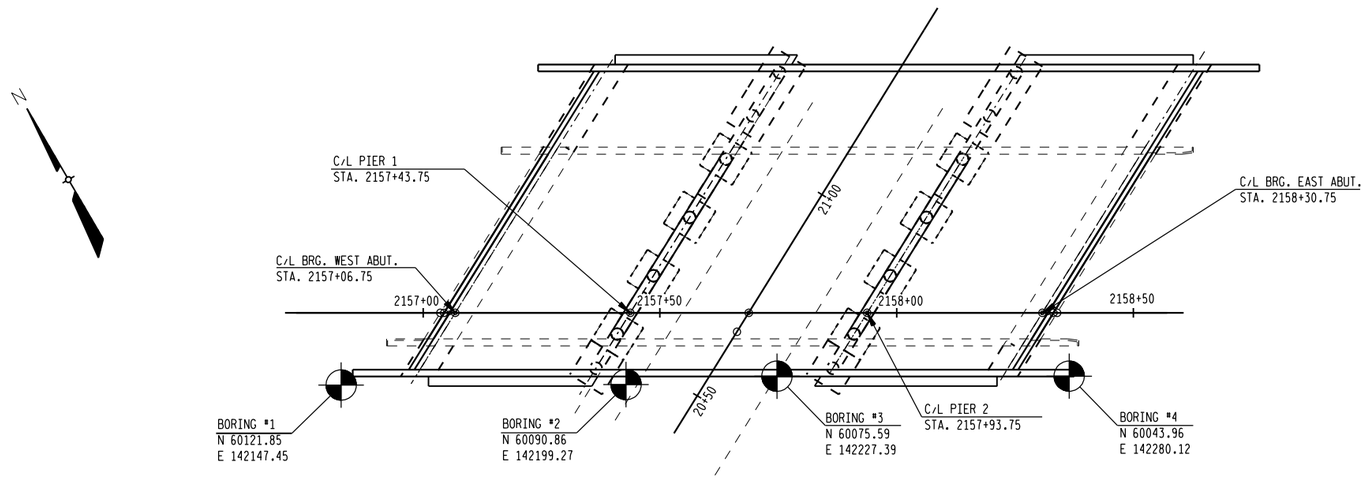

B-27-60

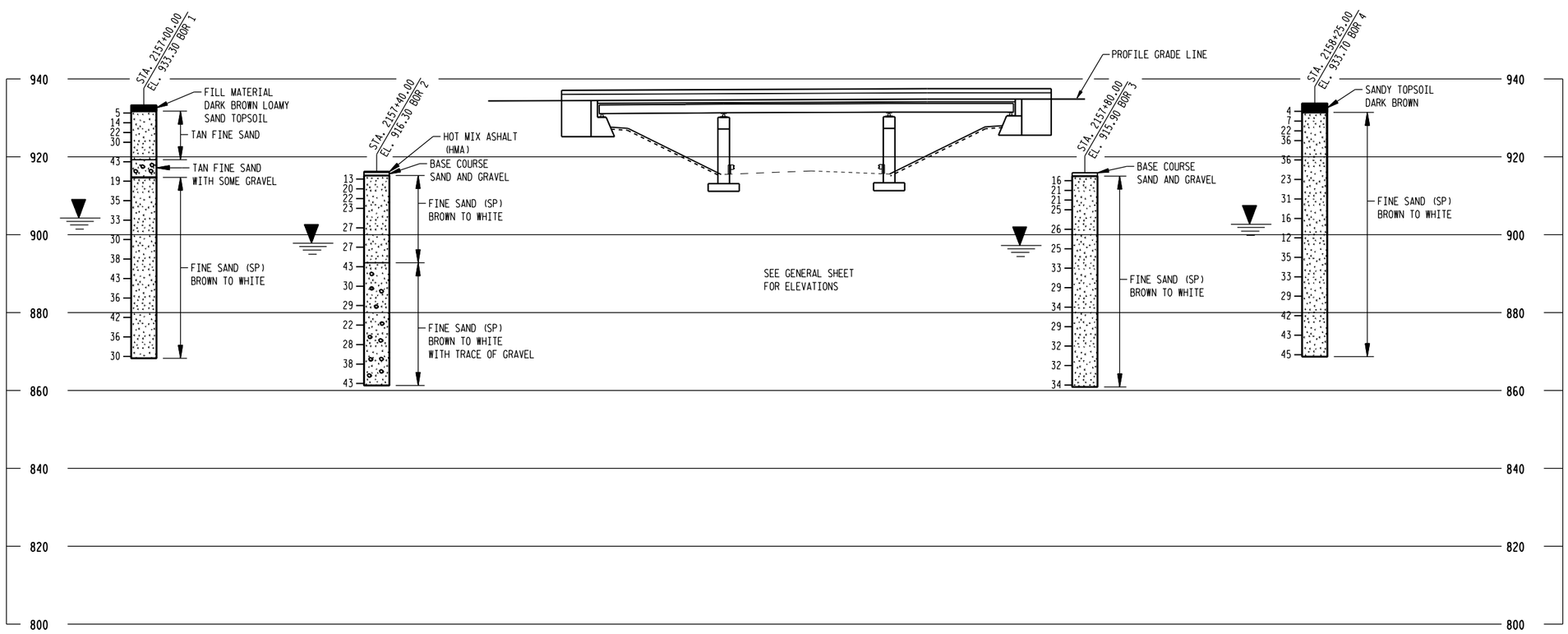

STATE PROJECT NUMBER	SHEET NO.
1023-02-65	

ABBREVIATIONS

F — Fine M — Medium C — Coarse
Ws — Weathered So — Sound

MATERIAL SYMBOLS

Topsoil, Sand, Gravel, Silt, Peat, Clay, Sandstone, Limestone, Igneous Rock

LEGEND OF PROBING

95/6 = 95 Blows for 6" Penetration
Probing taken with a 350# Wt. Falling 18" on a 2" O.D. Point

Probing No.
Sta.
Elevation
7 Average Blows Per Foot
Refusal 95/6

LEGEND OF BORING

Unconfined Strength — 7.7 7
Blows Per Ft. Using 140# Wt. Falling 30"
Wash Sample
Shelby Tube — S.T.
Ground Water Elevation
No Ground Water Observed Above This Elevation

Boring No.
Sta.
Elev.
Sandy Gravel
F.
Boulders or Cobbles
Sand
Silty Clay
So Limestone

Unless otherwise specified, the blows per foot at the locations indicated are based on driving a 2" O.D. x 1.4" I.D. split spoon sampler with a 140# hammer having a free fall of 30". The blow count is taken in undisturbed soil immediately below a cased or open hole eliminating side friction on the drive pipe.

SUBSURFACE EXPLORATION FOR FOUNDATION DESIGN AND BIDDERS INFORMATION

To obtain relative data concerning the character of materialin and upon which the foundation might be built, borings and/or soundings were made at points approximately as indicated on this drawing. The data presented herein represents the findings of the subsurface explorations made. However, because the depths investigated are limited and the area of the borings and/or soundings is very small in relation to the entire area, the Division of Highways does not warrant conditions below the depths investigated or that the classification of material encountered in these investigations is necessarily typical of the entire site.

No.	Date	Revision	By

STATE OF WISCONSIN
DEPARTMENT OF TRANSPORTATION

STRUCTURE B-27-60

Const. Spec.	WIS. 2009	Drawn By	BGB	Plans Checked	TAZ

SUBSURFACE EXPLORATION

SHEET 3 OF 24

PRINTER DRIVER: L:\library\TPLCADstds\Workspace-Clients\WisDOT\Microstation\Resources\WS_Printing\Printer_Drivers\ET_PDF_11 x 17.plt
PEN TABLE: L:\work\projects\100761\Cadd\V8\B-27-60\WS_Printing\Pen_Tables\ET_WisDOT.tbl
FILE NAME: L:\work\projects\100761\Cadd\V8\B-27-60\03-060-SOILS.dgn
PLOT DATE: 7/28/2008 PLOT TIME: 1:07:25 PM
BATCH PRINT SHEET OF

8

STATE PROJECT NUMBER	SHEET NO.
1023-02-65	

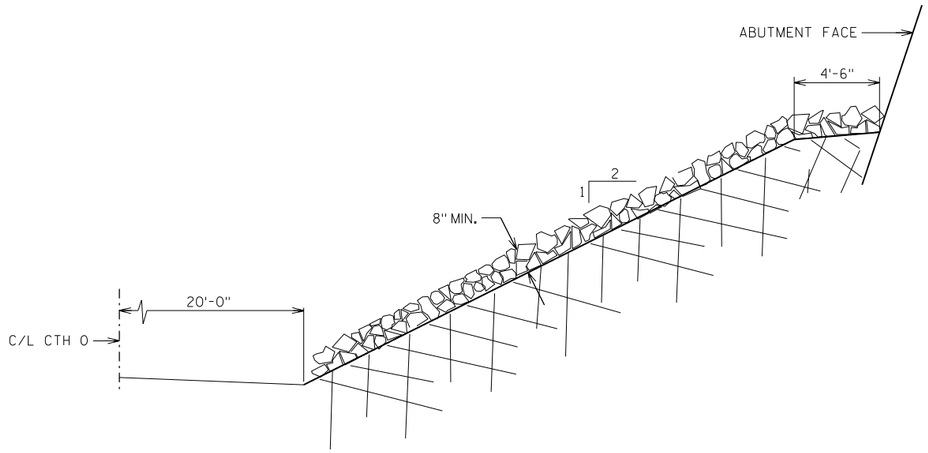

CROSS SECTION THRU SELECT CRUSHED MATERIAL

ASPHALTIC MATERIAL SHALL NOT BE APPLIED TO THE SURFACE OF SELECT CRUSHED MATERIAL.

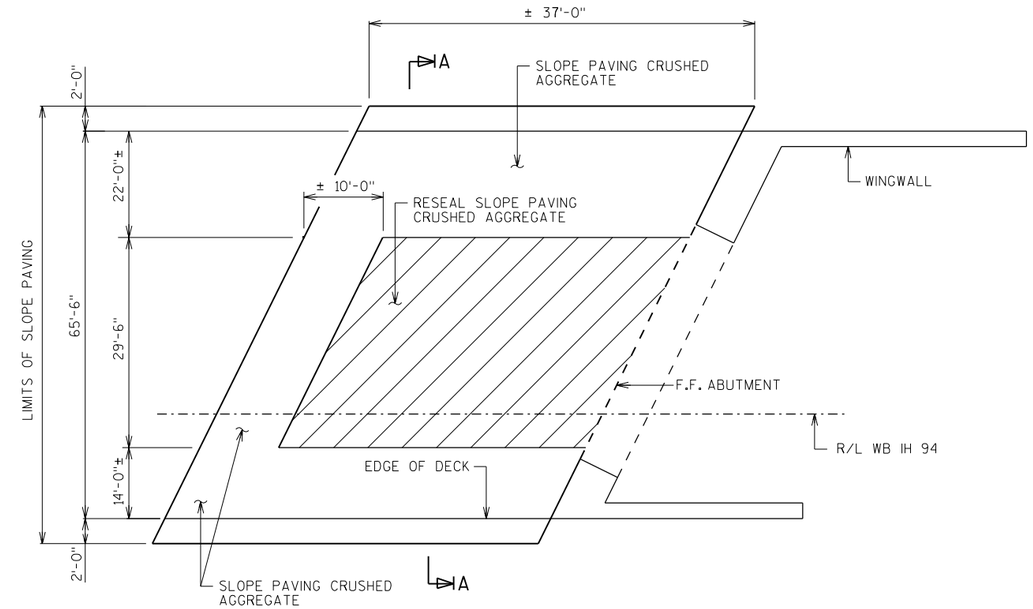

PLAN

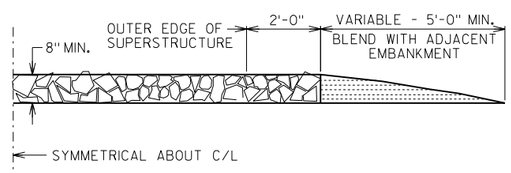

SECTION A-A

SELECT CRUSHED MATERIAL

GENERAL NOTES

DETAILS OF CONSTRUCTION, MATERIALS AND WORKMANSHIP NOT SHOWN ON THIS DRAWING SHALL CONFORM TO THE PERTINENT REQUIREMENTS OF THE STANDARD SPECIFICATIONS.

WOOD FORMS MAY BE LEFT IN PLACE WHEN OF A QUALITY ACCEPTABLE TO THE ENGINEER.

8

8

No.	Date	Revision	By

STATE OF WISCONSIN
DEPARTMENT OF TRANSPORTATION

STRUCTURE B-27-60

Const. Spec.	WIS. 2009	Drawn By	EJT	Plans Checked	TAZ

SLOPE PAVING DETAILS

SHEET 24 OF 24

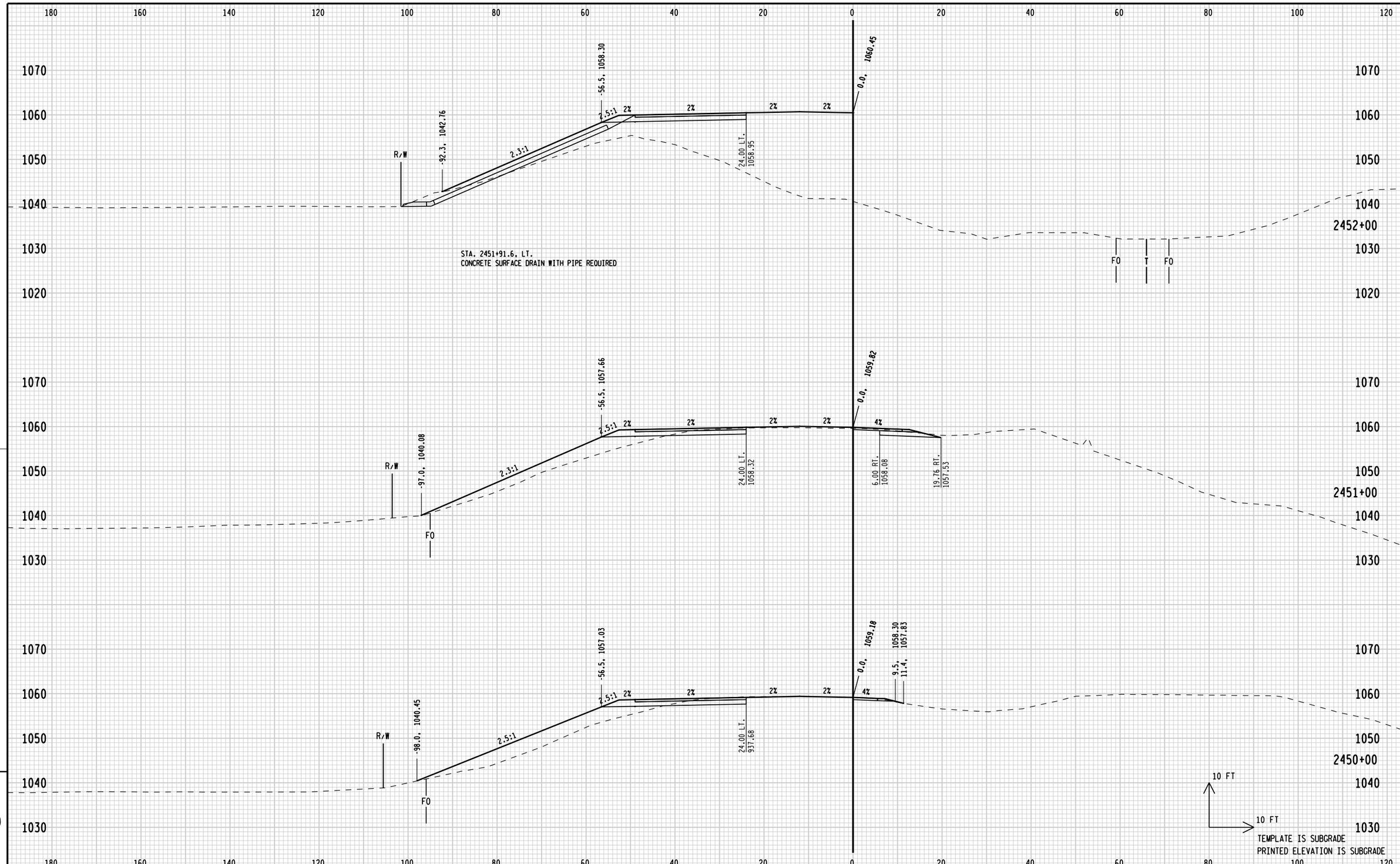

PROJECT NO.: 1023-05-75 & 1023-02-65	HWY: IH 94	COUNTY: JACKSON & MONROE	CROSS SECTIONS: IH 94 (AT UNION PACIFIC RR & ASPEN AVE.)	SHEET 327	E

FILE NAME: L:\work\projects\100761\Cadd\V8\090201_xs_IH_94_CP_RR_Aspen_Ave.dgn
BATCH PRINT SHEET 4 OF 12
PRINTER DRIVER: L:\library\TPN_CADstds\Workspace-CLIENTS\WisDOT\MicroStation\Resources\MS_Printing\Printer_Drivers\ET_PDF_11 x 17.plt
PEN TABLE: L:\work\projects\100761\Cadd\V8\MS_Printing\Pen_Tables\ET_WisDOT.tbl
PLOT DATE: 8/1/2008
PLOT TIME: 1:40:57 PM
PLOT SCALE: 1:20

WISDOT/CADDS SHEET 21A

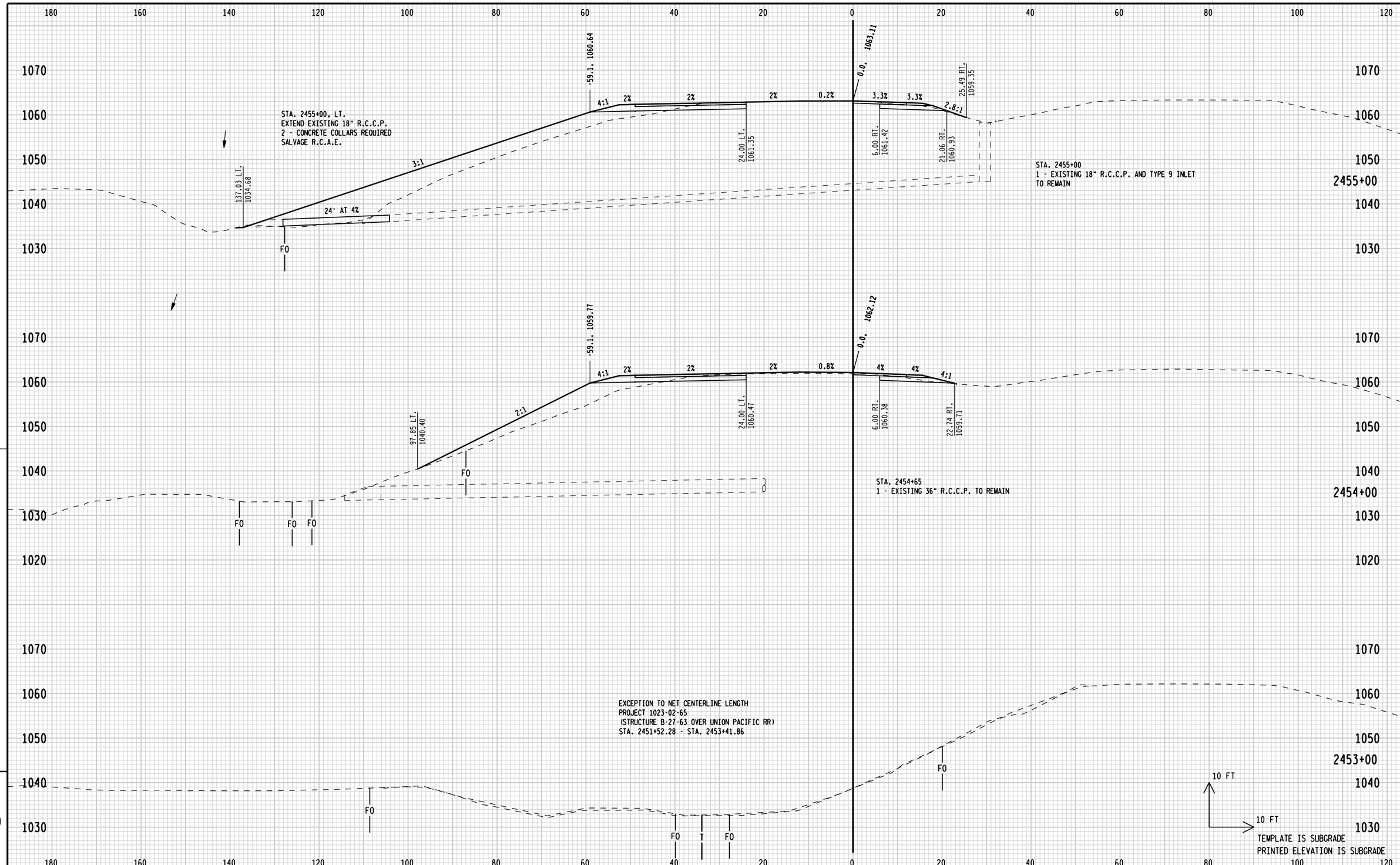

9

9

PROJECT NO.: 1023-05-75 & 1023-02-65	HWY: IH 94	COUNTY: JACKSON & MONROE	CROSS SECTIONS: IH 94 (AT UNION PACIFIC RR & ASPEN AVE.)	SHEET 328	E

FILE NAME: L:\work\projects\100761\Cadd\V8\090201_xs_IH_94_CP_RR_Aspen_Ave.dgn
BATCH PRINT SHEET 5 OF 12

PRINTER DRIVER: L:\library\TPN_CADstds\Workspace-CLIENTS\WisDOT\MicroStation\Resources\MS_Printing\Printer_Drivers\ET_PDF_11 x 17.plt
PEN TABLE: L:\work\projects\100761\Cadd\V8\MS_Printing\Pen_Tables\ET_WisDOT.tbl

PLOT DATE: 8/1/2008
PLOT TIME: 1:40:59 PM

PLOT SCALE: 1:20

WISDOT/CADDS SHEET 21A

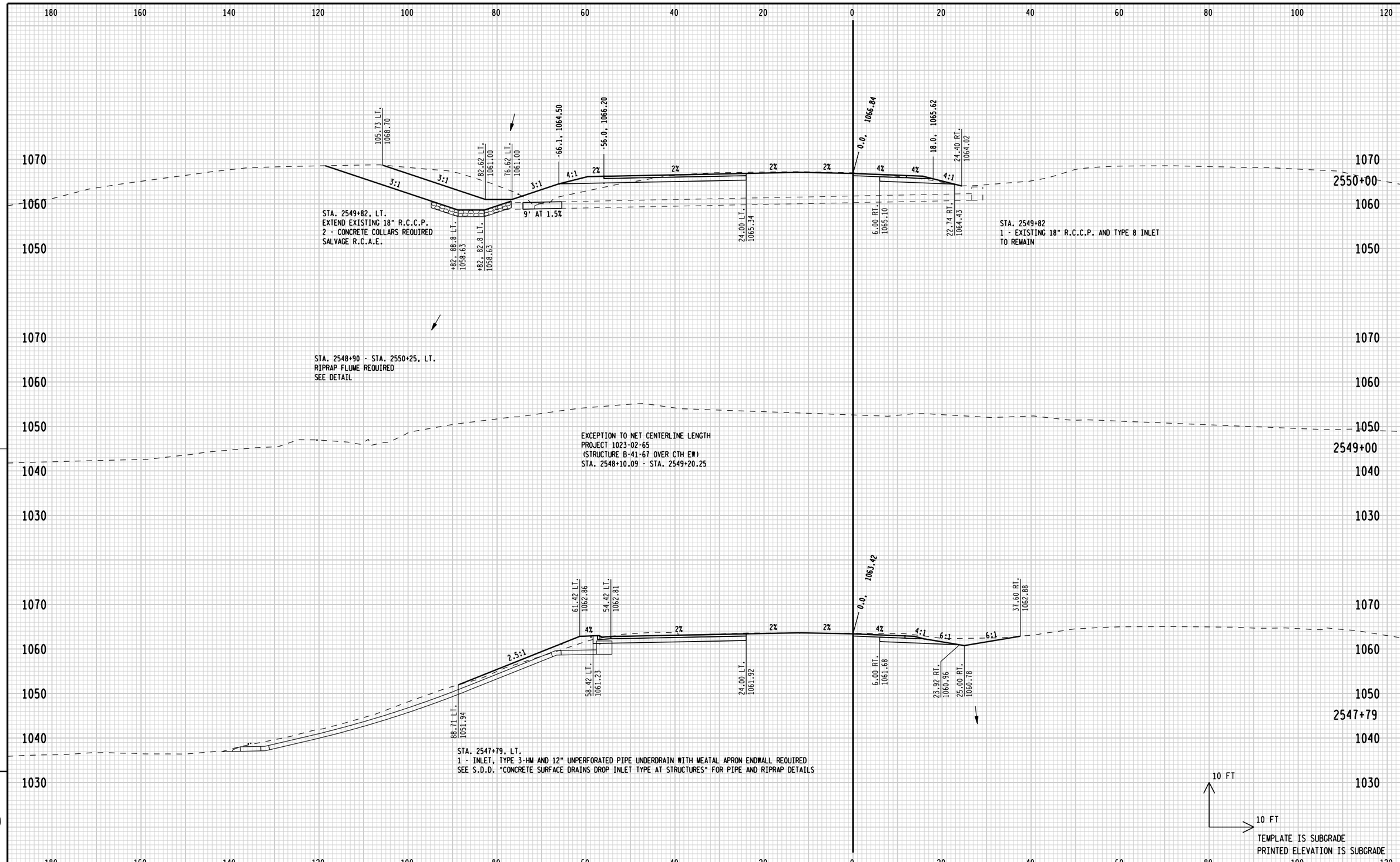

9

9

PROJECT NO.: 1023-05-75 & 1023-02-65	HWY: IH 94	COUNTY: JACKSON & MONROE	CROSS SECTIONS: IH 94 (AT CTH EW)	SHEET 340	E

FILE NAME: L:\work\projects\100761\Cadd\V8\090201_xs_IH_94_CTH_EW.dgn
BATCH PRINT SHEET 5 OF 13

PRINTER DRIVER: L:\library\TPN_CADstds\Workspace-CLIENTS\WisDOT\MicroStation\Resources\MS_Printing\Printer_Drivers\ET_PDF_11 x 17.plt
PEN TABLE: L:\work\projects\100761\Cadd\V8\MS_Printing\Pen_Tables\ET_WisDOT.tbl

PLOT DATE: 8/1/2008
PLOT TIME: 1:42:02 PM

PLOT SCALE: 1:20

WISDOT/CADDS SHEET 21A