October 6, 2016

Mr. Terry L. O'Clair, P.E.
Director, Division of Air Quality
North Dakota Department of Health
918 East Divide Avenue
Bismarck, North Dakota 58501

Dear Mr. O'Clair:

On behalf of Meridian Energy Group, Inc., I am pleased to submit the attached Permit Application for Air Contaminant Sources pursuant to obtaining a Permit to Construct for the proposed Davis Refinery Project in Billings County, just west of Belfield, North Dakota. This application and related documents includes our estimate of federally enforceable limits of CO, NOx, PM10, PM2.5, O3 (as VOCs), SO_2 and HAPs, for the proposed facility.

The Application and supporting documentation has been prepared by Vepica USA, Inc. and Zia Engineering and Environmental Consultants, LLC in accordance with requirements outlined within the Division of Air Quality's stationary source category designation in Section 33-15-14-01 and related National Ambient Air Quality Standards (NAAQS) for new sources. The process description information provided is based on the engineering design presently being developed by Vepica specifically for the complex, high-conversion crude oil refinery system proposed for the Project. The estimated Emissions Inventory for the Project was calculated in accordance with Environmental Protection Agency (EPA) guidelines, and EPA's Emission Estimation Protocol for Petroleum Refineries, Version 3, utilizing the Emission Factors compiled in AP-42, Fifth Edition, Volume I: Stationary Point and Area Sources, including applicable published updates and supplements. The physical and operational design of the proposed Davis Refinery is reflected in the emissions inventory and in the selection of related control technologies and operational constraints proposed for the project. These add-on pollution control technologies and operational constraints result in emissions levels that allow the facility to qualify as a Synthetic Minor Source in accordance with the Division of Air Quality's requirements.

The emissions modeling and air quality impact analysis will follow under separate cover and will be contained in Exhibit D. The modeling was conducted by Vepica/ZIA on behalf of Meridian. The modeling was conducted in accordance with the Division of Air Quality Criteria Pollutant Modeling Requirements for a Permit to Construct, Site Specific Guidance issued by the Department for the Davis Refinery and other Departments and EPA guidance and policy

MERIDIAN ENERGY GROUP, INC.
Thomas Williams, Executive Vice President, Planning and Permitting
Corporate Offices: 151 Kalmus Drive, Suite E-140, Costa Mesa, California 92626
707.299.0182 (c) 949.207.3815 (o) 949.579.2875 (f)
www.meridianenergygroupinc.com

documents, and the pre-application dispersion modeling protocol dated August 2016 and related comments of the Department received in memo dated September, 16, 2016. In conducting their analysis, Vepica/ZIA used EPA approved computer models appropriate for the type of source, projected emissions, and local area topography and meteorology to determine the ambient air quality impact consistent with the Department's guidance. The modeling results indicate that the potential Project emissions do not exceed significance levels for impacts to adjacent properties and will therefore not cause an exceedance of the Ambient Air Quality Standards (AAQS) or the PSD Class I increment levels and Air Quality Related Values (AQRVs) for the Theodore Roosevelt Memorial National Park.

Meridian Energy Group has on several occasions discussed the proposed Project with representatives of the Division of Air Quality prior to submitting this Application. The information and advice received during each of those discussions has been extremely helpful, and has been incorporated into this Application and its exhibits. Meridian plans to continue to work closely with your Agency during your review of this Application. Meridian will be coordinating with NDDoH personnel this week regarding the transfer of electronic files of calculation notes and airshed modeling. A digital master disk of the entire Application (including Exhibit D) will be delivered to the Department under separate cover.

It is Meridian's intention to meet with you and other members of your staff, at your convenience, in the near future to discuss the Project in greater detail and address any questions concerning the Project that you may have based upon your review of the Application. Please call if you have any questions or comments in the interim.

Sincerely,
MERIDIAN ENERGY GROUP, INC.

Tom Williams
Vice President, Planning & Permitting

MERIDIAN ENERGY GROUP, INC.

submits the

PERMIT TO CONSTRUCT APPLICATION
&
PERMIT APPLICATION FOR AIR CONTAMINANT SOURCES

for the

DAVIS REFINERY PROJECT

SUBMITTED TO THE NORTH DAKOTA DEPARTMENT OF HEALTH
DIVISION OF AIR QUALITY

Permit to Construct Application for
Davis Refinery

TABLE OF CONTENTS

SUBJECT

1 INTRODUCTION 1
2 OVERALL PROJECT DESCRIPTION 2
2.1 THE COMPANY 2
2.2 INDUSTRY AND MARKET 3
2.3 THE DAVIS REFINERY 4
2.4 THE REFINERY 4
2.5 OVERALL PROGRAM SCHEDULE 4
3 REFINERY OVERVIEW 6
4 PROCESS DESCRIPTION 8
4.1 Overview 8
4.2 Atmospheric Distillation Units (ADUs) 10
4.3 Gas Plant 10
4.4 Heavy Naphtha Hydrotreater 11
4.5 Light Naphtha Hydrotreater 11
4.6 Catalytic Reforming Units 11
4.7 Benzene Saturation unit 12
4.8 Kerosene Sweetening 12
4.9 Kerosene Hydrotreater 13
4.10 Diesel Hydrotreater 13
4.11 VacUum Distillation Unit (VDU) 14
4.12 Fluid Catalytic Cracking Unit 14
4.13 Isomerization Unit 15
4.14 FCC LPG Sweetening Unit 15

4.15 Alkylation Unit 15
4.16 FCC Naphtha Hydrotreater Unit 16
4.17 Sour Water Stripper 16
4.18 Sulfur Recovery Unit (SRU) 17
4.19 Utilities and Industrial Services 17
4.19.1 Storage 17
4.19.2 Loading / Unloading Facilities 18
4.19.3 Fuel Gas System 19
4.19.4 Raw and potable water system 19
4.19.5 Fire water system 20
4.19.6 Cooling Water System 20
4.19.7 Steam Generation and Boiler Feed Water Treatment 21
4.19.8 Instrument Air System 21
4.19.9 Nitrogen System 22
4.19.10 Oily Water Treatment System 22
4.19.11 Blowdown and Flare System 23
4.19.12 Emergency Power Generation 23
4.20 OPERATING SCENARIOS 23
5 SUMMARY OF AIR POLLUTANT EMISSIONS 25
5.1 Davis Refinery Emission Units 27
5.2 Davis Refinery Emissions Inventory 28
6 CRITERIA POLLUTANTS –AMBIENT AIR QUALITY STANDARDS 39
7 HAZARDOUS AIR POLLUTANTS AND THE AIR TOXICS POLICY 41
7.1 State Air Toxics Policy 42
8 PREVENTION OF SIGNIFICANT DETERIORATION APPLICABILITY (40 CFR 52) - NEW SOURCE REVIEW (NSR) 43
8.1 North Dakota Air Quality Construction Permits 45
9 TITLE V APPLICABILITY 48
10 REGULATORY FRAMEWORK 49
10.1 SUMMARY OF STATE AND FEDERAL RULE APPLICABILITY: 49
10.2 State of North Dakota Air Quality Rules 51
10.2.1 General Provisions (33-15-01) 51
10.2.2 Ambient Air Quality Standards (33-15-02) 52
10.2.3 Restriction of Emission of Visible Air Contaminants (33-15-03) 52
10.2.4 Emissions of Particulate Matter Restricted (33-15-05) 52

10.2.5 Emissions of Sulfur Compounds Restricted (33-15-06) 53
10.2.6 Control of Organic Compounds Emissions (33-15-07) 53
10.2.7 Control of Air Pollution from Internal Combustion Engines (33-15-08) 53
10.2.8 Prevention of Air Pollution Emergency Episodes (33-15-11) 53
10.2.9 Standards of Performance for New Stationary Sources (33-15-12)..... 54
10.2.10 Emission Standards for Hazardous Air Pollutants (33-15-13)..... 54
10.2.11 Designated Air Contaminant Sources, Permit to Construct, Minor Source Permit to Operate, Title V Permit to Operate (33-15-14) 55
10.2.12 Prevention of Significant Deterioration of Air Quality (33-15-15)..... 55
10.2.13 Restriction of Odorous Air Contaminants (33-15-16) 56
10.2.14 Restriction of Fugitive Emissions (33-15-17)..... 56
10.2.15 Stack Heights (33-15-18) 56
10.2.16 Visibility Protection (33-15-19) 56
10.2.17 Acid Rain Program (33-15-21)..... 57
10.2.18 Emissions Standards for Hazardous Air Pollutants for Source Categories (33-15-22)..... 57
10.2.19 Fees (33-15-23) 57
10.2.20 Standards for Lead-Based Paint Activities (33-15-24) 57
10.2.21 Regional Haze Requirements (33-15-25)..... 57
10.3 Code of Federal Regulations..... 58
10.3.1 National Ambient Air Quality Standards 58
10.3.2 New Source Performance Standards 58
10.3.3 National Emission Standards for Hazardous Air Pollutants (40 CFR 61) 61
10.3.4 National Emission Standards for Hazardous Air Pollutants for Source Categories (40 CFR 63)..... 62
10.3.5 Chemical Accident Prevention Provisions (40 CFR Part 68) 64
10.3.6 Compliance Assurance Monitoring (40 CFR Part 68) 64
10.3.7 Acid Rain provisions (40 CFR PARTS 72-78)..... 65
10.3.8 Mandatory Greenhouse Gas Reporting (40 CFR 98)..... 65
11 COMPLIANCE WITH THE AIR TOXICS POLICY 66
11.1 Ambient Air Quality Standards (33-15-02) 66
11.2 Opacity Limits (NDAC 33-15-03)..... 67
11.3 Particulate Matter Restrictions (Chapter 33-15-05)..... 67
11.4 Sulfur Compounds Restrictions (Chapter 33-15-06) 67

11.5 Control of Air Pollution from Vehicles and Other Internal Combustion Engines (Chapter 33-15-08) ... 68
11.6 Control of Organic Compounds Emissions (33-15-07) ... 68
11.7 New Source Performance Standards (NDAC 33-15-12) ... 69
11.7.1 Standards of Performance for Small Industrial-Commercial-Institutional Steam Generating Units (40 CFR 60 Subpart Dc) ... 69
11.7.2 Standards of Performance for Equipment Leaks of VOC in Petroleum Refineries for Which Construction, Reconstruction, or Modification Commences after November 7, 2006 (40 CFR Subpart GGGa) ... 69
11.7.3 Standards of Performance for Petroleum Refineries for Which Construction, Reconstruction, or Modification Commenced After May 14, 2007 (40 CFR 60 Subpart Ja) ... 71
11.7.4 Standards of Performance for Volatile Organic Liquid Storage Vessels (Including Petroleum Liquid Storage Vessels) for Which Construction, Reconstruction or Modification Commenced After July 23, 1984 (40 CFR 60 Subpart Kb) ... 80
11.7.5 Standards of Performance for VOC Emissions from Petroleum Refinery Wastewater Systems (40 CFR 60 Subpart QQQ) ... 82
11.7.6 Standards of Performance for Stationary Compression Ignition Internal Combustion Engines (40 CFR 60 Subpart IIII) ... 82
11.8 Restriction of Hazardous Air Pollutants Emissions (Chapter 33-15-13) ... 83
11.8.1 National Emissions Standards for Equipment Leaks (Fugitive Emission Sources) of Benzene (40 CFR 61 Subpart J) ... 83
11.8.2 National Emissions Standards for Equipment Leaks (Fugitive Emission Sources) (40 CFR 61 Subpart V) ... 83
11.8.3 National Emissions Standards for Benzene Waste Operations (40 CFR 61 Subpart FF) ... 84
11.9 Permitting Requirements (Chapter 33-15-14) ... 87
11.10 Restriction of Odorous Air Contaminant emissions (Chapter 33-15-16) ... 87
11.11 Restriction of Fugitive Emissions (Chapter 33-15-17) ... 87
11.12 Restriction of Hazardous Air Pollutants Emissions from Source Categories (Chapter 33-15-22) ... 88
11.12.1 Emission Standards for Hazardous Air Pollutants for Gasoline Distribution Bulk Terminals, Bulk Plants, and Pipeline Facilities (40 CFR 63 Subpart BBBBBB) ... 88
11.13 Shutdown/Malfunction and/or Deviation from Permit Requirements (NDAC 33-15-01-13.2 & 3) ... 89
11.14 Recordkeeping (NDAC 33-15-14) ... 90
11.15 Reporting (NDAC 33-15-14) ... 91

11.16 Fees (NDAC 33-15-23) 91
12 DISPERSION MODELING REQUIREMENTS FOR CRITERIA POLLUTANTS AND AIR TOXICS 92
12.1 Summary of Criteria Pollutant modeling Analysis 92
12.2 Summary of Toxics Analysis 93
Exhibit A: Application Forms
Exhibit B: Emissions Inventory
Exhibit C: Controls Technology Review
Exhibit D: Emissions Dispersion Modeling and Air Quality Impact Analysis
Exhibit E: Process Block Diagrams
Exhibit F: Site Plan

1 INTRODUCTION

Meridian Energy Group, Inc. ***("Meridian")*** is requesting approval from the North Dakota Department of Health ***("NDDH")***, Division of Air Quality, for the construction of a new crude oil refinery, the Davis Refinery, with a nominal processing capacity of 55,000 barrels per day, located west of Belfield, ND in Billings County. The proposed refinery is being designed to produce refined products including gasoline, diesel fuel, jet fuel and fuel oil, as well as liquefied petroleum gas ***("LPG")***.

After careful evaluation of applicable emission thresholds and conducting design optimization of the proposed Davis Refinery, Meridian has concluded that under applicable regulations, the proposed Davis Refinery, as it is being engineered and designed, will require a Synthetic Minor Permit to Construct ***("PTC")*** prior to beginning construction. Design optimization conducted during the early phases of engineering has been aimed at the reduction of air emissions through process technology choices and definition of operating conditions, in conjunction with, the selection of the proper emission controls after a pollutant-by-pollutant analysis of available control technologies. The PTC subject to this permit action application therefore includes federally enforceable limits of regulated air contaminants from the proposed facilities, to effectively limit emissions from the proposed Davis Refinery to below Major Source thresholds.

This application for a Synthetic Minor PTC was prepared in accordance with North Dakota's Permit to Construct requirements in NDAC Chapter 33-15-14-02, the NDDH's Criteria Pollutant Modeling Requirements for a Permit to Construct, Site Specific Guidance issued by the Department for the Davis Refinery and other Department's guidance and policy documents, including the pre-application dispersion modeling protocol developed in consultation with the Department. Therefore, Meridian is presenting a complete Air Pollution Permit Application (AP 100) and a HAP Permit Application (AP-117) for the proposed Davis Refinery, in order to request approval from the NDDH for the installation of a 55,000 BPD Oil Refining Facility near the town of Belfied in the western part of North Dakota. Meridian will submit any additional information needed by the NDDH to evaluate the potential risk to human health or the environment from HAP emissions.

2 OVERALL PROJECT DESCRIPTION

2.1 THE COMPANY

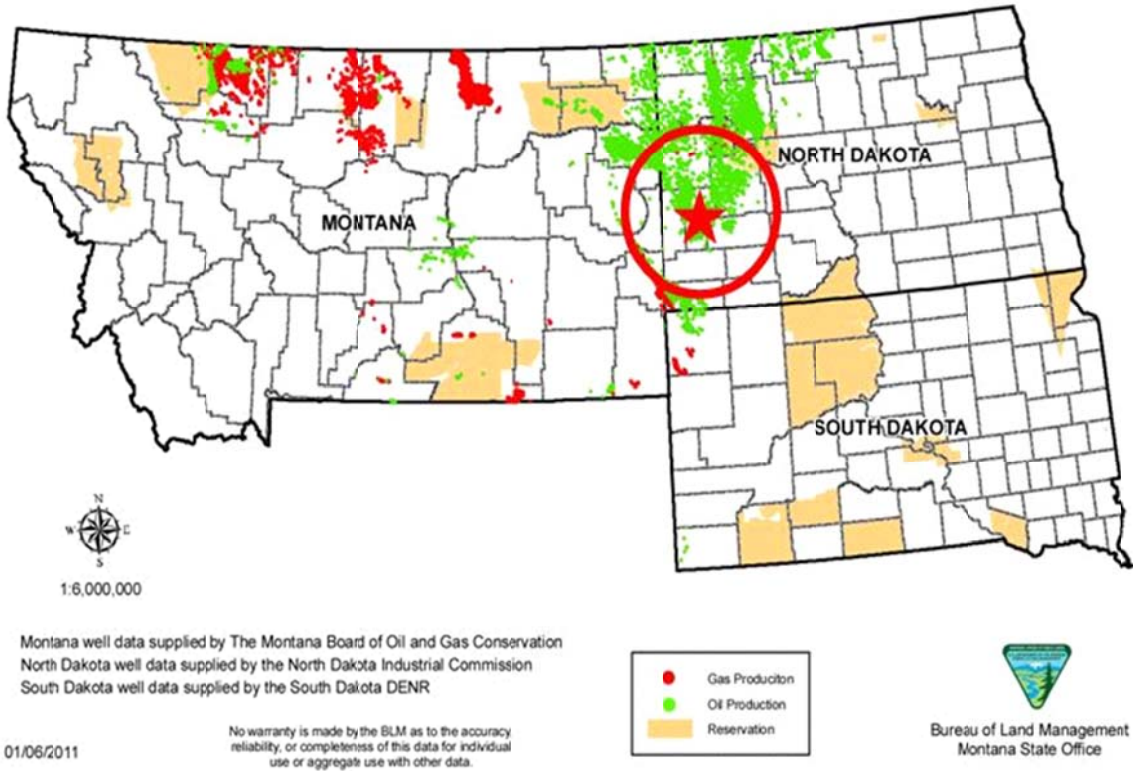

Figure 1. Montana/Dakota Oil Gas Producing Areas.

Meridian Energy Group, Inc. ***("Meridian" or the "Company")*** is a closely-held South Dakota corporation formed to build and operate the Davis Refinery ***(also "Davis" or the "Refinery")***, a 55,000 bpd high conversion crude oil refinery, in Billings County, North Dakota, in the heart of the Bakken Formation (see Figure 1 and Figure 2). The vast majority of the oil being produced in the Bakken is transported to distant refineries, and refined products consumed in the North Dakota markets are transported back for distribution. By building the Refinery near the source of crude oil, the Company can take advantage of low-cost sources of crude oil as feedstock and natural gas as refinery fuel. The Refinery will also benefit from a transportation cost advantage for its refined products.

Meridian will build and operate the Refinery on a 620-acre site in Billings County, North Dakota, just west of the town of Belfield ***(the "Site")***. The Site is located near the major oil and gas producing operations of the Bakken, is in close proximity to major north-south and

east-west highways, adjacent to oil & gas pipeline systems and the Burlington Northern Santa Fe ***("BNSF")*** main rail line that runs through the property. The Site will benefit from straightforward local and state permitting requirements and a favorable job-creation policy expressed by local and state governmental agencies. Meridian is designing the Refinery to be a 55,000 bpd high-conversion facility, having a 7.5 - 8.5 Nelson Complexity Index and producing a complete product slate including gasoline, diesel, jet fuel, fuel oil and LPG.

The Davis Refinery will be built near the source of Bakken crude oil production, where the Company can take advantage of low-cost sources of crude oil as feedstock and natural gas as refinery fuel. Abundant low-cost natural gas in the Bakken allows the Refinery to operate at low emissions levels and maximize efficient usage of crude feedstock. The Refinery also benefits from a transportation cost advantage that will be enjoyed by its refined products. Crude oil refineries can be configured to produce a wide variety of petroleum based products, from those commonly known like gasoline, jet and diesel fuels, to lubricants, asphalt base, plastics, waxes and lesser known specialty chemicals. The Refinery design will take full advantage of the particular nature of the Bakken Crude, which is a light-sweet crude, to produce a complete product slate responsive to the market and the needs of its tolling partners.

2.2 INDUSTRY AND MARKET

Shale oil was first discovered in the area of western North Dakota known as the Bakken formation several decades ago. However, until recently, oil and gas E&P companies found it cost prohibitive to produce. In 2007, companies returned to the Bakken with new techniques and began to produce significant amounts of crude oil from the shale formations, and by 2009, a full-blown oil boom was underway. North Dakota became a major U.S. domestic producer, forever changing the dynamics of the oil & gas industry. In recent years, North Dakota surpassed both Alaska and California to become the nation's second largest oil producing state. Over 1.1 million barrels per day of crude oil are produced in the Bakken, and most oil is shipped out of state for refining. Crude oil in its raw state is not a useful product. Refineries separate the crude oil into several categories of useful products through fractional distillation. These products are typically grouped into

three categories: Light Distillates such as gasoline and naphtha; Middle Distillates, such as diesel fuel and kerosene used as jet fuel; and, Heavy Distillates such as lubricants, fuel oil, wax and asphalt. Transportation fuels are the primary product category produced by refineries in the U.S. In 2013, according to the U.S. Energy Information Administration ***("EIA")***, one 42-gallon barrel of crude oil is converted by reporting refineries into 19 gallons of gasoline and 14 gallons of diesel fuel.

2.3 THE DAVIS REFINERY

The Company will build and operate the Davis Refinery on a 620-acre site in Billings County, North Dakota (*see Figure 2)* ***(the "Site")*** where the Company has entered into an option-purchase agreement with the owner. As of July 5th, 2016 the Billings County Board of Commissioners unanimously approved a rezoning permit to industrial use that will allow the construction of the Davis Refinery on this property. The Site is located near the major oil and gas producing operations of the Bakken, the Site is in close proximity to major north-south and east-west highways, to oil and gas pipeline systems, the Burlington Northern Santa Fe ***("BNSF")*** primary rail line runs through the property, and the site is adjacent to the BakkenLink pipeline and rail terminal.

2.4 THE REFINERY

The Davis Refinery will be an approximately 55,000 barrels per standard day ***("bpsd")*** high-conversion crude refinery that will produce a full slate of refined products and specialty chemicals. Meridian has initiated engineering plans and the Refinery design is based upon the availability of process equipment that will shorten the schedule and reduce costs while ensuring environmental compliance.

2.5 OVERALL PROGRAM SCHEDULE

The Company has initiated engineering and detailed design will proceed in parallel with the project financing activities, which Meridian hopes to result in financial closing on or about the end of the third quarter of 2016. If that schedule is maintained, the initial phase of the Refinery will achieve Mechanical Completion in late 2017 or early 2018. A detailed project schedule is being developed by Vepica, and will be available in several weeks.

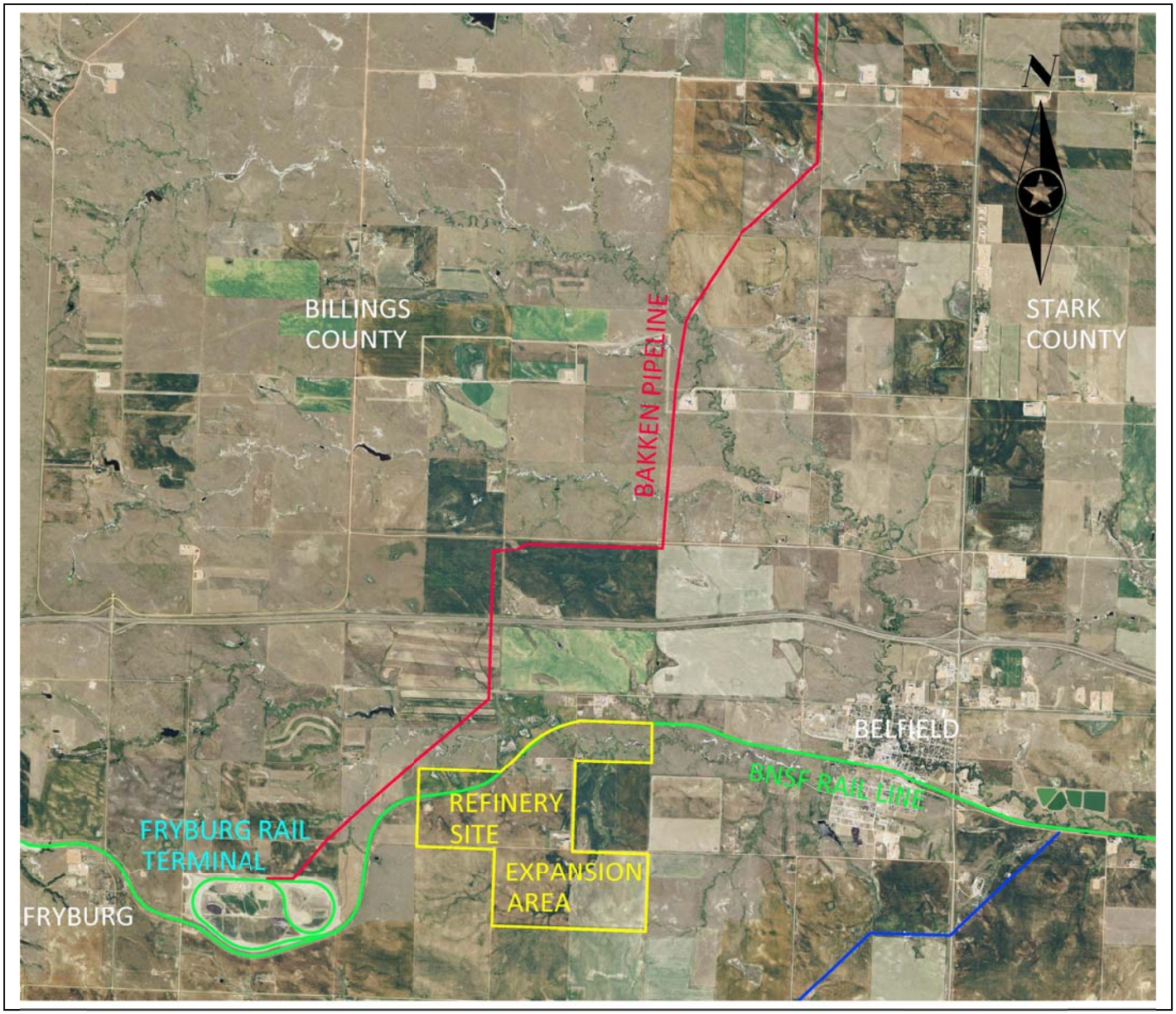
N
BILLINGS
COUNTY
STARK
COUNTY
BAKKEN PIPELINE
BELFIELD
BNSF RAIL LINE
REFINERY
SITE
EXPANSION
AREA
FRYBURG RAIL
TERMINAL
FRYBURG

3 REFINERY OVERVIEW

The proposed refinery scheme when fully installed will utilize conventional distillation and high-conversion technology to process up to 55,000 bpd of feedstock crude oils into a full slate of refined products including LPG, Gasoline, Jet Fuel, Auto Diesel, and Fuel Oil.

Feedstock to the refinery will be delivered via a combination of pipeline and rail and pumped into storage tanks. From the storage tanks crude oil will be fed to the Crude ADUs to separate feedstock into Naphtha, Kerosene and Diesel which will be sent to other units for further processing. Propane and Butane will be obtained from the overhead hydrocarbon liquid product of the atmospheric units Fuel Gas. Butanes from the ADUs will undergo further processing in the Isomerization and Alkylation units to obtain alkylate for the gasoline blending stock. Crude residues from the ADUs will be sent to a vacuum distillation unit for further fractionation.

Intermediates from the vacuum distillation are sent to a Fluid Catalytic Cracking ***("FCC")*** Unit for conversion into lighter products such as LPG, gasolines, light cycle oil, and decant oil. Naphtha from the FCC Unit will be further treated prior to being sent to the gasoline blending stock.

Light and Heavy Naphtha from the ADUs will undergo desulphurization prior to feeding the Catalytic Reforming Units ***("CRUs")*** that will process the low-octane components to obtain higher octane reformate to meet gasoline blending specifications. The Kerosene cut from the ADUs will be further processed to meet Jet Fuel product specifications. The Diesel cut will be sent through a desulphurization unit to produce Ultra Low Sulfur Diesel ***("ULSD")***.

To support the plant's main processes, a sulfur recovery system will remove H_2S from plant off-gas streams that can be used as refinery fuel gas, while converting removed H_2S to elemental sulfur. Ancillary equipment for the refinery will include utilities such as Raw Water Treatment, Fire Water, Cooling Water, Steam Generation, Condensate, Plant Air, Instrument Air, Electrical Distribution and Emergency Power Generation, and Waste Water Treatment.

A tank farm will include storage for incoming feedstock as well as refined products. Loading facilities will include accommodations for both truck and rail transportation. Refinery buildings will include the main control room, administrative offices, and maintenance shop and warehousing.

4 PROCESS DESCRIPTION

4.1 OVERVIEW

The proposed refinery scheme at full capacity includes a conventional distillation unit, naphtha hydrotreater, catalytic reforming units, kerosene hydrotreater, diesel hydrotreater, iC4 desulphurization, isomerization, alkylation, vacuum distillation, fluid catalytic cracking unit, gasoline desulphurization, and C3/C4 desulphurization to process up to 55,000 BPD of Bakken crude oil into a full slate of refined products including LPG, low and mid-grade Gasolines, Jet Fuel, Ultra Low Sulfur Diesel, Heating Diesel, and Fuel Oil.

The selected configuration for the Davis Refinery corresponds to a cracking refinery (see Davis Refinery Block Flow Diagram in Exhibit E) having substantial capability for yield and quality improvement, but at the same time producing heavy residual fuel oil. Product sulfur levels are controlled by various desulphurization methods to meet sulfur product specifications.

Feedstock to the refinery will be delivered via a combination of pipeline and rail and pumped into storage tanks. From the storage tanks crude oil will be fed to two Crude Atmospheric Distillation Units ***("ADUs")*** to separate feedstock into Overhead Gas plus Naphtha, Kerosene and Diesel cuts which will be sent to other units for further processing. To increase the production of high-value petroleum products, atmospheric residue will be run through a Vacuum Distillation Unit ***("VDU")*** to further refining.

Heavy and Light Naphtha from the Gas Plant is fed to the corresponding Naphtha Hydrotreater to remove sulfur and nitrogen, among others impurities, that would otherwise poison the catalyst used in the downstream catalytic reforming processes. Hydrotreated Naphtha is fed to two Catalytic Reforming Units that convert the low-octane components into higher octane reformate to be used in gasoline blending. As a byproduct, hydrogen rich gas is produced to supply the requirements of the hydrotreater units.

Straight kerosene from crude ADUs is sent to the Kerosene Hydrotreater unit where sulfur and nitrogen are removed to meet product specifications for jet fuel during summer operations or for blending into winter diesel to meet required cold flow properties. The

diesel cut from the ADUs is sent through the Diesel Hydrotreater Unit where sulfur and nitrogen are removed to produce ultra-low sulfur diesel.

Combined gasoil feed from the VDU, are combined and fed to the FCC Unit for conversion into lighter products such as LPG, catalytic naphtha, light cycle oil, and heavy cycle oil. Cracking of large hydrocarbon molecules into smaller molecular hydrocarbons take place in this unit under the presence of the catalyst. The rich olefins light ends from the FCC gas concentration unit and isobutenes from upstream processes are treated in the FCC LPG Sweetening Unit to remove mercaptans before being sent to the alkylation unit for further processing. The catalytic naphtha is further treated in a Hydrotreater Unit prior to being blended in the gasoline pool. Light cycle oil and heavy cycle oil produced in the FCC are blended with the residual fuel oil from the VDU.

The Alkylation Unit converts treated isobutane and olefins through an aliphatic alkylation processing to alkylate, a branched paraffin gasoline blending stock. The resulting high branched product is low vapor pressure and high octane blendstock for the gasoline pool. Since the ADUs do not produce enough isobutene for the alkylation process, an Isomerization Unit will convert feedstock normal butane into isobutene upstream of the Alkylation unit.

To support the plant's main processes, plant sour off-gas streams and acid gas from the sour water stripper will be routed to an adsorber for H_2S removal. The resulting sweet gas is sent to the fuel gas system. A sulfur recovery unit will convert removed H_2S to elemental sulfur.

The refinery includes utilities such as process water, fire water, cooling water, demineralized water, steam generation, condensate, plant air, instrument air, power distribution and emergency power generation, storm water, and waste water treatment.

The tank farm includes incoming feedstock tankage and intermediate and refined product storage. Loading facilities will include accommodations for both truck and rail transportation. Refinery buildings will include the main control room, administrative offices, maintenance shop, first aid services, and warehousing.

4.2 ATMOSPHERIC DISTILLATION UNITS (ADUS)

The ADUs separate the lighter hydrocarbons from the heavier hydrocarbons based on the differences in their boiling point. As lighter products are boiled off, the heavier parts, called residue, remain at the bottom.

Overhead vapors plus Naphtha from the ADUs will be sent to the Gas Plant. Kerosene and Diesel cuts from the ADUs will be sent to other units for further processing into specific products. To increase the production of high-value petroleum products, atmospheric residues will be run through a vacuum distillation column for further refining.

A single stage desalter will be included in the design of the ADU to reduce salts, suspended solids and other water soluble compounds to reduce heat exchangers and fractionator fouling and plugging due to salt deposition and reduced rate of corrosion in the overhead system. The effluent from the desalter will be sent to the oily water treatment system.

Emission point sources associated with the Atmospheric Distillation Unit include the refinery fuel gas fired heaters 101-H-0101 and 102-H-0201.

4.3 GAS PLANT

Overhead vapors and naphtha from the ADUs, are sent to the Gas Plant to separate them into fuel gas, propane, butane, and C5+.

The naphtha liquids coming off the ADUs will be routed to the debutanizer column, which will serve to stabilize the naphtha liquids. The stabilized naphtha will be fed to the Naphtha Hydrotreater and the overhead distillate from the debutanizer will be treated for mercaptans removal, heated and fed to a depropanizer column. The overhead stream of the depropanizer will be recovered as propane and the bottom product as butane. Additional butane shall be imported to meet the requirements of the gasoline pool.

Butanes from the Gas Plant undergo further processing in the Isomerization and Alkylation units to obtain alkylate for the gasoline blending stock.

There are no emission point sources associated with the Gas Plant.

4.4 HEAVY NAPHTHA HYDROTREATER

The Heavy Naphtha Hydrotreater will pretreat heavy naphtha to reduce sulfur (less than 1 weight ppm) and nitrogen contents, among other impurities, that would otherwise degrade the catalyst used in the downstream catalytic reforming process. Catalyst degradation would lead to excessive coking and rapid deactivation of the reformer catalyst.

The feed to the heavy naphtha hydrotreater will be preheated with the reactor effluent, mixed with recycle hydrogen and then brought to reactor inlet temperature by a refinery fuel gas fired charge heater. The reactor effluent goes through a separator from where the liquid phase flows to the product stripper to be stabilized and sent to the catalytic reformer. Vapors from a refinery fuel gas fired reboiler are used as the stripping medium in order to minimize water consumption and reduce sour water process. The off gas from the stripper is routed to the fuel gas system.

Emission point sources associated with the Heavy Naphtha Hydrotreater Unit include the refinery fuel gas fired heater 105-H-0501 and stripper reboiler. 105-H-0502

4.5 LIGHT NAPHTHA HYDROTREATER

The Light Naphtha Hydrotreater will treat the light naphtha from the Gas Plant to remove sulfur to produce a blendstock for the gasoline pool with less than 10 ppm sulfur content.

The feed to the light naphtha hydrotreater will be preheated with the reactor effluent, mixed with recycle hydrogen and then brought to reactor inlet temperature by a refinery fuel gas fired charge heater. The reactor effluent goes through a separator from where the liquid phase stream flows to the product stripper where direct steam injection is used as the stripping medium. Stabilized Naphtha from the product stripper is sent to the storage area. The off gas from the stripper is routed to the fuel gas system.

Emission point sources associated with the Light Naphtha Hydrotreater Unit include a refinery fuel gas fired heater 110-H-1101.

4.6 CATALYTIC REFORMING UNITS

Hydrotreated heavy naphtha is fed to two Catalytic Reforming Units (CRUs) that convert the low-octane components into higher octane reformate to be used in gasoline blending.

As a byproduct, hydrogen rich gas is produced to supply the requirements of the refinery's hydrotreater units.

The reaction section of each CRU consists of three heaters and three reactors. The feed to the CRU initial reactor is preheated with the reactors effluent and further heated to the reactor inlet temperature in a refinery fuel gas fired heater. The reforming reaction is endothermic therefore the effluent of each reactor is reheated in a fired heater before it passing through to the subsequent reactor.

The reactors effluent is cooled and separated into recycled gas and liquid which is further stabilized and separated into fuel gas, LPG and stabilized reformate with an octane of 98 RON.

Emission point sources associated with the CRUs include the refinery fuel gas fired heaters 106-H-0601 and 107-H-0701.

4.7 BENZENE SATURATION UNIT

In the CRUs, benzene precursors in the reformer feed are partially converted to benzene. The light reformate stream from the reformer splitter contains essentially all of the benzene generated in the CRUs.

The Benzene Saturation Unit processes the light reformate stream from the CRUs to convert the benzene into cyclohexane and achieve a maximum gasoline specification of 0.62 vol. % benzene. The unit utilizes a highly active catalyst that is operated in the liquid phase under mild conditions. The reactor effluent is stabilized in a stripper column and sent to the gasoline blending pool storage.

There are no emission point sources associated with the Benzene Saturation Unit.

4.8 KEROSENE SWEETENING

During the initial phase of the proposed Davis Refinery, the Kerosene fraction from the ADU is sent through a sweetening unit in order to be prewashed with caustic, water washed and filtered in order to dry and remove remaining impurities and adjust acidity to achieve the required jet fuel product specification. The treated kerosene is sent to the jet fuel blending storage.

There are no emissions point sources associated with the Phase 1 Kerosene Sweetening Unit.

4.9 KEROSENE HYDROTREATER

During Phase 2, the kerosene fraction will be treated in the Kerosene Hydrotreater Unit and the Kerosene Sweetening Unit will be repurposed. The Kerosene Hydrotreater will produce a final product with a sulfur content of 15 wppm which can be sent to jet fuel blending storage for summer stock production or to the low sulfur diesel blending pool to meet the cold flow properties of the product diesel during winter stock production.

The feed to the Kerosene Hydrotreater will be preheated with the reactor effluent, mixed with recycle hydrogen and then brought to reactor inlet temperature by a refinery fuel gas fired charge heater. The reactor effluent goes through a separator from where the liquid phase stream flows to the product stripper where direct steam injection is used as the stripping medium. Treated kerosene is sent to the storage and Wild Naphtha is sent to the Naphtha Hydrotreater. The off gas from the stripper is routed to a low pressure gas recovery system and sent to the fuel gas system.

Emission point sources associated with the Kerosene Hydrotreater Unit include the refinery fuel gas fired heater 125-H-2501.

4.10 DIESEL HYDROTREATER

In order to produce Ultra Low Sulfur Diesel, hydrotreating and dewaxing of intermediate distillates from the ADUs is needed. The Diesel cut is sent through the Diesel Hydrotreater Unit where sulfur, nitrogen and waxes are removed to produce low sulfur diesel with a final product sulfur content of 15 wppm.

The feed to the Diesel Hydrotreater will be preheated with the reactor effluent, mixed with recycle hydrogen and then brought to reactor inlet temperature by a refinery fuel gas fired charge heater. The reactor effluent goes through a separator from where the liquid phase stream flows to the product stripper where direct steam injection is used as the stripping medium. Treated diesel is sent to ULSD blending storage and Wild Naphtha is sent to the Naphtha Hydrotreater. The off gas from the stripper is routed to the fuel gas system.

Emission point sources associated with the Diesel Hydrotreater Unit include the refinery fuel gas fired heater 111-H-1101.

4.11 VACUUM DISTILLATION UNIT (VDU)

Crude residue from the ADUs is sent to the VDU for further fractionation. The crude residue is preheated through heat exchange with the gas oil products and finally brought to the vacuum distillation column inlet temperature by a refinery fuel gas fired heater. The column separates the vacuum gas oils under vacuum pressure to avoid product cracking and degradation at high temperature.

Light and Heavy vacuum gas oils are produced in the vacuum distillation unit, cooled and combined to feed the FCC Unit. Cooled residue from the VDU is sent to fuel oil storage.

Emission point sources associated with the VDU include the refinery fuel gas fired heaters 103-H-0301 and 103-H-0302.

4.12 FLUID CATALYTIC CRACKING UNIT

Light vacuum gas oil ***("LVGO")*** and Heavy vacuum gas oil ***("HVGO")*** from the VDU are combined and fed to the FCC Unit for conversion into lighter products. This feed is heated in a refinery fuel gas fired heater before entering the Fluid Catalytic Cracking reactor. In the reactor, the cracking of gas oils occurs immediately after vaporizing through contacting with the hot catalyst from the regenerator. The cracked products continue through a vapor line from the reactor to the FCC fractionator. Coke produced by the cracking reaction is deposited on the circulating catalyst in the reactor. The spent catalyst is circulated to the regenerator where coke is burned off by oxidation.

In the fractionation section, the hot reactor vapors are cooled and separated into wet gas unstabilized gasoline, light cracked gasoil ***("LCCO")*** and decant oil. Gasoline and gas are pumped and compressed into the FCC Gas Concentration Plant for further processing.

Emission point sources associated with the FCCU include the refinery fuel gas fired heater 112-H-1201 and flue gas from catalyst regeneration 112-VS-1201. Flue gas from the regenerator will be treated in a Wet Gas Scrubber to meet permissible emission limits.

4.13 ISOMERIZATION UNIT

The isomerization unit catalytically converts butane into isobutene for feed to the Alkylation Unit. Imported butane and butane rich gas and liquid streams from the refinery are initially fed to a depropanizer to remove light ends which are sent to the fuel gas system. Butane from the depropanizer is dried and fed to a deisobutanizer where separation of isobutene and normal butane occurs.

The normal butane stream from the deisobutanizer is converted to isobutene in a series of fixed bed reactors in the presence of hydrogen. Reactor effluent is cooled, separated from the hydrogen rich recycle gas and fed to the stabilizer from where butanes are recycled back to the deisobutanizer and the lighter ends are sent to the fuel gas system. The overhead isobutene stream from the deisobutanizer is sent for further sweetening together with olefins from the FCC prior to being fed to the Alkylation Unit.

Emission point sources associated with the Isomerization Unit include refinery fuel gas fired heaters 117-H-1701 and 117-H-1702.

4.14 FCC LPG SWEETENING UNIT

During Phase 2, the Kerosene Sweetening unit will be repurposed for FCC olefins and isobutane sweetening service involving the liquid/liquid extraction of the mercaptans in the feed stream. The combined flows from the FCC olefins and isobutanes from the isomerization unit are sent through the repurposed Phase 1 sweetening unit in order to be prewashed with caustic, water washed and filtered in order to dry and remove remaining impurities and adjust acidity. The mercaptide-rich caustic solution is regenerated by oxidation in the presence of a liquid catalyst, and the extracted mercaptans are oxidized to disulfides ***("RSSR")***. The disulfide oil and caustic solution are separated in the disulfide separator. Caustic is circulated back to the extractor and the disulfide oil is sent to the slop tank for reprocessing.

There are no emissions point sources associated with the FCC LPG Sweetening Unit.

4.15 ALKYLATION UNIT

The Alkylation Unit combines isobutene from the isomerization unit with olefins from the FCC Unit in the presence of an acid. The olefin feed is initially combined with the recycle

isobutene, cooled with the net effluent stream, dried and fed to the contactor reactor where olefins are essentially converted to alkylate. The resulting high branched paraffin gasoline blending stock has high RON and MON, low RVP, low sulfur content, and good drivability index.

Emission point sources associated with the Alkylation Unit include refinery fuel gas fired heater 118-H-1801.

4.16 FCC NAPHTHA HYDROTREATER UNIT

The FCC Naphtha Hydrotreater will treat naphtha produced in the FCC to remove sulfur and produce a blendstock for the gasoline pool with less than 10 ppm sulfur content and minimum octane loss.

The feed to the FCC naphtha hydrotreater will be preheated with the reactor effluent, mixed with recycle hydrogen and then brought to reactor inlet temperature by a refinery fuel gas fired charge heater. The reactor effluent goes through a separator from where the liquid phase stream flows to the product stripper where direct steam injection is used as the stripping medium. Treated FCC naphtha is sent to gasoline blending pool storage and the off gas from the stripper is routed to the fuel gas system.

Emission point sources associated with the FCC Naphtha Hydrotreater Unit include refinery fuel gas fired heater 114-H-1401.

4.17 SOUR WATER STRIPPER

The Sour Water Stripper will remove sour gases from sour water sources at the refinery. Sour water is produced from ADUs and Hydrotreating Units. During normal operation the sour water from the ADUs is recycled without treatment to the desalter but there is also the possibility to route this stream to the sour water stripper if treatment is required.

The treated water product is primarily used as wash water to the desalter system in the ADUs and the Hydrotreating Units. Any excess stripped water will be sent to WWTP. The resultant sulfur-laden sour gas is processed at the sulfur recovery unit.

There are no emissions point sources associated with the Sour Gas Unit.

4.18 SULFUR RECOVERY UNIT (SRU)

To handle the sulfur recovery needs of the proposed Davis Refinery the estimated required capacity of the SRU is 8 LTPD. At this level of sulfur recovery neither scavengers (effective for < 0.1 ton/day), nor Claus units (effective for >20 tons/day), are viable options. Treatment options that involve iron-redox are proven, effective sulfur recovery technologies for sulfur recovery needs in the intermediate (0.1-20 tons/day) range.

For the Davis Refinery, Meridian has chosen Merichem's LO-CAT technology for sulfur recovery. This patented liquid-redox system uses a proprietary chelated iron solution catalyst to convert H_2S to innocuous, elemental sulfur slurry inside an oxidizer vessel. The slurry passes through a sulfur filter to produce an elemental sulfur cake which is loaded onto trucks for offsite reuse or disposal. No hazardous waste byproducts are produced. The environmentally safe catalyst is continuously regenerated in the process. The Direct LO-CAT process allows 100% turndown in gas flow and H_2S concentrations and has an H_2S Removal efficiency of 99.9 %.

Emission point sources associated with the SRU include, a thermal oxidizer (122-H-2201) for complete combustion of tail gases from the LO-CAT oxidizer.

4.19 UTILITIES AND INDUSTRIAL SERVICES

The Davis Refinery will be designed to be a self-sufficient complex responsible for generating all the utilities and industrial services required except natural gas and electrical power.

4.19.1 Storage

The Storage Facilities are designed to store crude feedstock as well as, finished products, component blend stocks and intermediate stocks. The feedstocks and products handled in the Storage Area include:

Feedstock:	Bakken Crude
Intermediate products:	Light Naphtha
	Heavy naphtha
	Kerosene
	Diesel

	Light Slop
	Heavy Slop
	Vacuum Gasoil
	FCC Naphtha
Blend stocks:	Reformate
	Hydrotreated FCC Naphtha
	Butane
Final Products:	LPG
	Regular Gasoline
	Jet-Fuel
	ULSD
	Fuel Oil

Crude, Naphtha, Reformate and Gasoline storage tanks will be Internal Floating Roof type. Diesel, fuel oil and slop oil tanks will be cone roof. Butane and LPG will be stored in bullet type tanks. A vapor recovery system is contemplated to ensure emissions from the tank farm area do not exceed permissible levels.

4.19.2 Loading / Unloading Facilities

The Bakken crude will be initially shipped to the Davis Refinery by rail. Direct access from the refinery to the BNSF rail system, will allow the shipment or receipt of products or raw materials via rail tank car. To supply the local market with refined products, and accommodate raw material receipt from the nearby areas, the refinery will also have a tanker truck loading/unloading facility. During Phase II, a product pipeline system could be available to move product into common carrier pipeline systems in the Midwest.

Rail Loading/Unloading

A Rail Loading/Unloading Facility will be required for crude, gasoline, jet fuel, diesel and fuel oil. The loading/unloading rack is designed as a multispot area for the loading and unloading system.

The crude oil transfer station, designed to unload 55,000 BPSD of Bakken Crude, would include the rail car unloading rack, vent headers, a containment area, drain connections and

collection header, and tank car grounding. Two pumps, operating in parallel, would pump the crude oil from the unloading rack header to the Crude Tanks.

Gasoline, jet fuel, diesel and fuel oil would be shipped out via rail to markets in the Midwest and gulf coast. The products will be transferred from tanks to the loading rack using two loading pumps, operating in parallel, for each product.

Tanker Truck Loading/Unloading Facility

A Tank Truck Loading Facility will be required to ship LPG, gasoline, jet and diesel. Tank trucks will be loaded at island-type racks, equipped with several islands, each of which will have loading positions equipped with several product loading arms. A vapor recovery connection will be provided at each loading island for VOC control.

4.19.3 Fuel Gas System

The Davis Refinery heaters, boilers and thermal oxidizers will be designed to burn refinery fuel gas only. The fuel gas system will operate under pressure control and will be designed to collect light ends from the gas plant and off gases from the refinery processes and distribute treated fuel gas to low pressure consumers. Before being routed to the fuel gas distribution system, sour gas streams will be treated to remove H_2S. The totality of the fuel gas will be treated to meet hydrocarbon and water dew point required by the consumers.

All fuel gas streams will be sent to a central collection drum to dampen the effect of fluctuations in stream composition and thermal content. The drum is the pressure control point for the system. It provides volume to reduce pressure fluctuations and to disengage entrained liquid.

There are no emissions point sources associated with the Fuel Gas System. The H_2S removed from the fuel gas stream will be recovered as elemental sulfur in the Sulfur Recovery Unit.

4.19.4 Raw and potable water system

The main source of raw water for the Davis Refinery will be brackish groundwater from wells drawing from the Dakota formation located at a depth of approximately 5000 ft. Other potential source of water could be a treated effluent for industrial reuse.

The Raw Water Treatment System will be composed of two separate treatment trains: the Demineralized Water System ***("DWS")*** and the Service Water System ***("SWT")***. This segregation is to prevent mixing brine water with low salinity water with oil traces.

The SWS will receive recycled water from the Wastewater Treatment Plant and blowdowns from the cooling and boiler system and will provide water with the quality required by the cooling system and the process and utility water needs of the refinery. The DWS will receive water from the water wells and will provide water with the quality required by the Boiler Feed Water System. There are no emissions point sources associated with the Raw Water Treatment System.

4.19.5 Fire water system

The requirements for fire water are intermittent, but constitute a very large instantaneous flow. Raw water and/or stormwater collected from non-process areas will be used as a source for the plant's fire water system. Depending on the confirmed quality of the water source, it will be routed to the fire water tank with minimal treatment. Total fire water pump capacity requirements will be provided by three pumps, driven by 600-hp diesel engines. It is anticipated that diesel engines will be tested once a month to ensure operability of the firewater system. Annual hours of operation are not expected to exceed 100 hours. A jockey pump, installed in parallel with the main fire pumps, pressurizes the system when the latter are not in use.

4.19.6 Cooling Water System

The use of cooling water at the Davis Refinery will be minimized considering that water is scarce in this particular region. Air cooling will be the preferred cooling method in order to reduce the global import of raw water. Any requirement of cooling water will be supplied in a closed loop circuit.

The cooling water system will consist of multiple cooling water cells, cooling water pumps, chemical dosing packages, side stream filtration, blowdown facilities and distribution network. The system will be a recirculating type where the warm water returns to the cooling water system and is cooled in the cooling water towers. The system will have a continuous make-up and blowdown. The makeup is controlled by the cooling tower basin

liquid level to balance losses by evaporation, drift, blowdown and others. The blowdown controls the concentration of impurities and could be recycled to the RWTP if quality becomes an issue, it will be discharged to the waste water treatment facility. These towers are induced mechanical draft type with counter flow arrangement and drift eliminators (0.005% drift rate) built into the media.

The cooling water system will have three 50% capacity cells (215-C-1501A, 215-C-1501B and 215-C-1501C), two in operation and one stand-by, which are the emission point sources associated with the Cooling Water System.

4.19.7 Steam Generation and Boiler Feed Water Treatment

Onsite processes will use heat integration as much as possible to minimize steam requirements due to heating needs. Medium pressure steam will still be required at processing units to satisfy other needs such as stripping, purging, etc. To minimize steam tracing due to the limited water supply in the refinery site area electrical heat tracing will be maximized.

The steam needs of the refinery processing units beyond those that can be satisfied through heat integration/heat recovery will be generated in three standard package gas boilers () and through heat recovery in process units. To supply the operation needs of the refinery, two boilers will be in operation and one will be kept in hot stand-by. The system design will include condensate treatment for direct use as feed to the boiler system and will include bypass to the oily water treatment system in case of oil contamination.

Emission point sources associated with the Steam Generation and Boiler Feed Water Treatment include refinery fuel gas fired boilers 202-B-0201A, 202-B-0201B and 202-B-0201C.

4.19.8 Instrument Air System

Instrument and Plant Air to cover the refinery service and maintenance activities requirements for dry oil-free air service to operate pneumatic instruments, control valves, ESD valves and utility stations at the required temperature, pressure and water dew point will be supplied by two electrical motor driven Air Compressors. A Back Up Air

Compressor and a HP Air Receiver will comprise the backup system that will supply 20 minutes of instrument air in case of emergency.

There are no emissions units associated with the Instrument Air System.

4.19.9 Nitrogen System

The proposed Davis Refinery will use nitrogen for inerting equipment to prevent flammable atmospheres, blanketing tanks to prevent the ingress of air and snuffing fired heaters, preparing piping and equipment for maintenance by purging out hydrocarbons, and removing air/oxygen in equipment before startup. Nitrogen supply will be contracted out as a utility service. Liquid nitrogen will be stored in a liquid storage system.

There are no emissions units associated with the Nitrogen System.

4.19.10 Oily Water Treatment System

The oily water treatment system collects and treats oily wastewater generated in the refinery processes which contains oil, emulsified oil, or other hydrocarbons. Oily wastewater streams are generated mainly in the desalter units, process oily water drains, and from tanks bottom draws. Potentially oil-contaminated drainage will also be treated through the oily water treatment system. This will include precipitation runoff that falls directly on refinery areas that have a high potential for contact with oil, products and byproducts produced during refining operations. Potentially oil-contaminated drainage also includes other runoff generated during other routine and non-routine activities foreseen during design (e.g. maintenance, firewater).

This oily wastewater treatment system will include treatment to remove both free and emulsified oil from the water. The final treatment scheme will be dependent on the final reuse, recycle or disposal method of treated water. Following treatment, water will be recycled back as raw water to the refinery processes.

The Oily Water Treatment System is considered an area source of air emissions. To minimize emissions, the system will include tightly covered treatment units, blanketing gas and/or vapor recovery.

4.19.11 Blowdown and Flare System

The refinery will operate a vapor recovery system to capture vapors and return to product/processes instead of releasing through stacks or via flaring during normal operations. Flaring will be on an intermittent and as-needed basis.

To safely combust hydrocarbon relief flows during process upsets, and other times as needed during startups, shutdowns, or malfunctions the refinery will have a flare system comprised of a combination of an enclosed flare and elevated flares. The elevated flares will only operate during emergency cases in which the capacity of the enclosed flare is exceeded. A separate system with an elevated flare to handle acid gases in cases of SRU unavailability will be provided.

4.19.12 Emergency Power Generation

The proposed refinery design includes an emergency generator driven by a 4700 hp diesel engine. The emergency generator will operate in cases of complete blackout only, and normally it will operate less than 100 hours per year to account for monthly maintenance checks.

4.20 OPERATING SCENARIOS

The initial construction phase (Phase 1) of the proposed Davis Refinery corresponds to a 27,500 BPD Hydroskimming refinery (see Davis Refinery Phase 1 Block Flow Diagram in Exhibit E). The Phase 1 configuration will include one ADU and associated Gas Plant, a single Naphtha HDT, a single CRU and Benzene Saturation Unit to produce gasoline, a Kerosene Sweetening Unit to produce Jet Fuel, and a Diesel HDT, to produce ULSD. Additional distillation, hydrotreatment and conversion units will be added during subsequent construction in order to increase the crude feedstock processing capacity to 55,000 BPSD to augment the gasoline and middle distillates yields and reduce fuel oil production.

The ADU to be installed during Phase 1 will be designed to operate with only kerosene and intermediate distillate side streams while the heavy gasoil cut will be recovered through the atmospheric residue stream. Provisions for a future heavy gasoil side stream will incorporated into the design.

During Phase 1, the Benzene Saturation Unit and Diesel HDT will operate at reduced capacities to handle the Phase 1 gasoline pool and diesel production. At full refinery processing capacity, the Kerosene Sweetening Unit installed in Phase 1 will be repurposed into FCC LPG and isobutane sweetening service, the Diesel HDT Unit installed in Phase 1 will be repurposed into Kerosene HDT service to process the Kerosene cut and a new Diesel Hydrotreater will be installed to process the Diesel cut at full production.

During Phase 1, the full range naphtha produced in the Gas Plant associated with the Phase 1 ADU will be fed to the Naphtha Hydrotreater which will be operating at nameplate capacity to achieve a sulfur specification of less than 10 ppm in the gasoline product. At full refinery capacity, naphtha from both ADUs will be fractionated into Light and Heavy Naphtha streams. These streams will be hydrotreated in two separate hydrotreaters, the Naphtha HT installed during Phase 1 which will treat the heavy naphtha stream and the Light Naphtha HT which will treat the light naphtha required by the gasoline pool.

Winter Operations

Distillates from Bakken crude have high paraffin content and therefore poor cold-flow properties. For this reason, the kerosene and diesel cuts will be blended during wintertime fuel production, to produce ULSD with good cold flow operability at the expense of Jet Fuel production. In addition, the RVP of the gasoline produced by the proposed Davis Refinery will also be adjusted seasonally to meet market specifications during wintertime and summertime fuel production.

5 SUMMARY OF AIR POLLUTANT EMISSIONS

A detailed emissions inventory of the Emission Units associated with the refinery operations was prepared to assess the Potential to Emit ***("PTE")*** of air contaminants *"subject to regulation"* or *"regulated air contaminants"*, also known as *"regulated NSR pollutants"*.

"Emissions Unit" in accordance with NDAC 33-15-14-06 *"means any part or activity of a stationary source that emits or has the potential to emit any regulated air contaminant or any contaminant listed under section 112(b) of the Federal Clean Air Act."*

"Potential to emit" has the meaning given to it in NDAC 33-15-14-06: *"the maximum capacity of a stationary source to emit any air contaminant under its physical and operational design. Any physical or operational limitation on the capacity of a source to emit an air contaminant, including air pollution control equipment and restrictions on hours of operation or on the type or amount of material combusted, stored, or processed, shall be treated as part of its design if the limitation is enforceable by the administrator of the United States environmental protection agency and the department."* For a petroleum refinery, quantifiable fugitive emissions must also be included with point source emissions in the facility-wide PTE calculation.

"Fugitive emissions" as per NDAC 33-15-14-06 *"are those emissions which could not reasonably pass through a stack, chimney, vent, or other functionally equivalent opening."*

"Regulated air contaminant" has the meaning given to it in NDAC 33-15-14-06:

"(1) Nitrogen oxides or any volatile organic compounds.
(2) Any contaminant for which a national ambient air quality standard has been promulgated.
(3) Any contaminant that is subject to any standard promulgated under section 111 of the Federal Clean Air Act.
(4) Any class I or II substance subject to a standard promulgated under or established by title VI of the Federal Clean Air Act.

(5) Any contaminant subject to a standard promulgated under section 112 or other requirements established under section 112 of the Federal Clean Air Act, including sections 112(g), (j), and (r) of the Federal Clean Air Act, including the following:
(a) Any contaminant subject to requirements under section 112(j) of the Federal Clean Air Act. If the administrator fails to promulgate a standard by the date established pursuant to section 112(e) of the Federal Clean Air Act, any contaminant for which a subject source would be major shall be considered to be regulated on the date eighteen months after the applicable date established pursuant to section 112(e) of the Federal Clean Air Act; and
(b) Any contaminant for which the requirements of section 112(g)(2) of the Federal Clean Air Act have been met, but only with respect to the individual source subject to section 112(g)(2) of the Federal Clean Air Act requirement.

Regulated NSR Pollutant is defined at 40 CFR 51.166(b)(49) as:

"(i) Any pollutant for which a national ambient air quality standard has been promulgated and any constituents or precursors for such pollutants identified by the Administrator (e.g., volatile organic compounds are precursors for ozone); (ii) Any pollutant that is subject to any standard promulgated under section 111 of the Act; (iii) Any Class I or II substance subject to a standard promulgated under or established by title VI of the Act; or (iv) Any pollutant that otherwise is subject to regulation under the Act; except that any or all hazardous air pollutants either listed in section 112 of the Act or added to the list pursuant to section 112(b)(2) of the Act, which have not been delisted pursuant to section 112(b)(3) of the Act, are not regulated NSR pollutants unless the listed hazardous air pollutant is also regulated as a constituent or precursor of a general pollutant listed under section 108 of the Act". *"Regulated NSR pollutant"*, in accordance NDAC 33-15-15 and 33-15-16, does not include greenhouse gases as defined in 40 CFR 86.1818-12. Regulated NSR pollutants for petroleum refineries include particulate matter (PM), particulate matter with a diameter of 10 microns or less (PM_{10}), particulate matter with a diameter of 2.5 microns or less ($PM_{2.5}$), sulfur dioxide (SO_2), nitrogen oxides (NOx), carbon monoxide (CO), ozone (as VOCs), lead (Pb), hydrogen sulphide (H_2S) and reduced sulfur compounds.

5.1 DAVIS REFINERY EMISSION UNITS

Identification of the Emission Units of the proposed Davis Refinery was made based on the review of engineering data from process units, specifically: block and process flow diagrams ***("BFD" & "PFDs")***, process descriptions and engineering calculations. The main Emission Units and associated equipment of the proposed Davis Refinery which have the PTE regulated air contaminants through direct discharges to the atmosphere include the following:

Process Units

1. ADUs: heaters.
2. VDU: heaters.
3. Light Naphtha Hydrotreater: heaters.
4. Heavy Naphtha Hydrotreater: heaters.
5. Kerosene Hydrotreater Unit: heaters.
6. Diesel Hydrotreater Unit: heaters.
7. CRUs: heaters and regenerator vents.
8. FCCU (including gas concentrator): heaters and regenerator vent.
9. Isomerization Unit: heaters.
10. Alkylation Unit: heaters.
11. SRU: thermal oxidizer.
12. Tank Farm.
13. Flare System.

Main Utilities

14. Waste Water Treatment.
15. Cooling Water System: drift loss in cooling tower.
16. Product loading operations: Truck and Rail Loading stations
17. Fire water system: diesel engine driven back-up firewater pumps.
18. Emergency Power Generation: internal diesel combustion engine.

5.2 DAVIS REFINERY EMISSIONS INVENTORY

Emissions of regulated air contaminants were estimated using the Emission Factors presented in the EPA Emissions Estimation Protocol for Petroleum Refineries, unless noted otherwise. Where applicable, EPA AP-42 Compilation of Air Pollutant Emission Factors. Volume 1: Stationary Point and Area Sources, Fifth Edition, was consulted for specific criteria pollutant emission factors. As part of the development of the emissions inventory, a Controls Technology Review was conducted and efficiencies of selected controls were included in the controlled PTE calculations when the controls were proposed as part of design of the Davis Refinery. The detailed emissions inventory including assumptions, methodologies, and calculation are included Exhibit B.

Table 1 summarizes the Emissions Units of the proposed Davis Refinery at full capacity including emission controls that are inherent part of the equipment design (i.e. low NOx burners, floating roofs, etc.). Table 2 summarizes the Davis Refinery inventory of emissions at full capacity without considering add-on emissions controls. Table 3 summarizes the air emissions control technology proposed as part of the design of the Emission Units including proposed emissions controls efficiencies. Table 4 summarizes the Davis Refinery PTE at full capacity including the effect of add-on pollution controls. Table 5 summarizes the Davis Refinery PTE after construction of the Phase 1 of the Davis Refinery (27,500 BPD). Results summarized in Table 5 assume the installation of proposed add-on pollution controls for NOx or PM in heaters and boilers would be delayed until construction of the Phase 2 of the refinery to increase slate of refined products and refining capacity to 55,000 BPD.

Table 1. Davis Refinery Emissions Units

Unit Number	Unit Description	Emission Unit Description	TAG	Air Pollution Control Equipment
101	Atmospheric Distillation Unit #1	ADU #1 heater rated 72.00 MMBTU/h and fired on refinery fuel gas	101-H-0101	Best combustion practices. Ultra Low NOx Burner
102	Atmospheric Distillation Unit #2	ADU #2 heater rated 72.00 MMBTU/h and fired on refinery fuel gas	102-H-0201	Best combustion practices. Ultra Low NOx Burner
103	Vacuum Distillation Unit	VDU heater #1 rated 76.47 MMBTU/h and fired on refinery fuel gas	103-H-0301	Best combustion practices. Ultra Low NOx Burner
		VDU heater #2 rated 57.65 MMBTU/h and fired on refinery fuel gas	103-H-0302	Best combustion practices. Ultra Low NOx Burner
105	Heavy Naphtha Hydrotreater	HNHT heater #1 rated 13.75 MMBTU/h and fired on refinery fuel gas	105-H-0501	Best combustion practices. Ultra Low NOx Burner
		HNHT heater #2 rated 16.25 MMBTU/h and fired on refinery fuel gas	105-H-0502	Best combustion practices. Ultra Low NOx Burner
106	Catalytic Reformer Unit #2	CRU #2 heater with a combined rating of 41.73 MMBTU/h and fired on refinery fuel gas	106-H-0601	Best combustion practices. Ultra Low NOx Burner
107	Catalytic Reformer Unit #1	CRU #1 heater with a combined rating of 92.50 MMBTU/h and fired on refinery fuel gas	107-H-0701	Best combustion practices. Ultra Low NOx Burner
110	Diesel Hydrotreater	Diesel HDT heater rated 16.25 MMBTU/h and fired on refinery fuel gas	110-H-1001	Best combustion practices. Ultra Low NOx Burner
111	Light Naphtha Hydrotreater	LNHT heater rated 13.90MMBTU/h and fired on refinery fuel gas	111-H-1101	Best combustion practices. Ultra Low NOx Burner
112	Fluid Catalytic Cracking (FCC) Unit	Regenerator vent stack	112-VS-1201	Complete carbon burn regenerator design
		FCCU heater rated 28.35 MMBTU/h and fired on refinery fuel gas	112-H-1201	Best combustion practices. Ultra Low NOx Burner

Unit Number	Unit Description	Emission Unit Description	TAG	Air Pollution Control Equipment
114	FCC Naphtha Hydrotreater	FCC Naphtha HDT heater rated 17.48 MMBTU/h and fired on refinery fuel gas	114-H-1401	Best combustion practices. Ultra Low NOx Burner
117	Isomerization Unit	Isomerization heater #1 rated 1.65 MMBTU/h and fired on refinery fuel gas	117-H-1701	Best combustion practices. Ultra Low NOx Burner
		Isomerization heater #2 rated 3.75 MMBTU/h and fired on refinery fuel gas	117-H-1702	Best combustion practices. Ultra Low NOx Burner
118	Alkylation Unit	Alkylation heater rated 84.19 MMBTU/h and fired on refinery fuel gas	118-H-1801	Best combustion practices. Ultra Low NOx Burner
122	SRU Thermal Oxidizer	Thermal Oxidizer with a rated capacity of 1.58 MMBTU/h	122-H-2201	Two SRUs sized for the full refinery capacity. Emissions from both SRUs will be routed to a common Thermal Oxidizer.
125	Kerosene Hydrotreater	Kerosene HDT heater rated 12.50 MMBTU/h and fired on refinery fuel gas	125-H-2501	Best combustion practices. Ultra Low NOx Burner
202	Boiler 1	Boiler with a rated capacity of 60 MMBTU	202-B-0201A	Under normal operations 2 Boilers in service 1 in hot standby
202	Boiler 2	Boiler with a rated capacity of 60 MMBTU	202-B-0201B	
202	Boiler 3	Boiler with a rated capacity of 60 MMBTU	202-B-0201C	
203	Crude oil tank #1	Bakken crude oil storage tank #1 with a nominal 110,999 bbl capacity	203-T-0001	Dome with IFR (Internal Floating Roof) and Submerged Fill Pipe
203	Crude oil tank #2	Bakken crude oil storage tank #2 with a nominal 110,999 bbl capacity	203-T-0002	Dome with IFR (Internal Floating Roof) and Submerged Fill Pipe
203	Crude oil tank #3	Bakken crude oil storage tank #3 with a nominal 110,999 bbl capacity	203-T-0003	Dome with IFR (Internal Floating Roof) and Submerged Fill Pipe
203	Desulfurized Heavy Naphtha tank #1	Heavy Naphtha storage tank #1 with a nominal 64,996 bbl capacity	203-T-0005	Dome with IFR (Internal Floating Roof) and Submerged Fill Pipe

Unit Number	Unit Description	Emission Unit Description	TAG	Air Pollution Control Equipment
203	Reformate tank #1	Reformate storage tank #1 with a nominal 33,312 bbl capacity	203-T-0006	Dome with IFR (Internal Floating Roof) and Submerged Fill Pipe
203	Reformate tank #2	Reformate storage tank #2 with a nominal 33,312 bbl capacity	203-T-0007	Dome with IFR (Internal Floating Roof) and Submerged Fill Pipe
203	Gasoline tank #1	Regular Gasoline tank #1 with a nominal 64,996 bbl capacity	203-T-0008	Dome with IFR (Internal Floating Roof) and Submerged Fill Pipe
203	Gasoline tank #2	Regular Gasoline tank #2 with a nominal 64,996 bbl capacity	203-T-0009	Dome with IFR (Internal Floating Roof) and Submerged Fill Pipe
203	Mid Gasoline tank #1	Mid Gasoline tank #1 with a nominal 64,996 bbl capacity	203-T-0010	Dome with IFR (Internal Floating Roof) and Submerged Fill Pipe
203	Jet Fuel tank #1	Jet Fuel tank #1 with a nominal 33,312 bbl capacity	203-T-0011	Dome with IFR (Internal Floating Roof) and Submerged Fill Pipe
203	Jet Fuel tank #2	Jet Fuel tank #2 with a nominal 33,312 bbl capacity	203-T-0012	Dome with IFR (Internal Floating Roof) and Submerged Fill Pipe
203	Undesulphurized Diesel tank #1	Undesulphurized Diesel storage tank #1 with a nominal 33,312 bbl capacity	203-T-0013	Cone Roof, Submerged Fill Pipe
203	Undesulphurized Diesel tank #2	Undesulphurized Diesel storage tank #2 with a nominal 33,312 bbl capacity	203-T-0014	Cone Roof, Submerged Fill Pipe
203	Desulphurized Diesel tank #1	Desulphurized Diesel storage tank #1 with a nominal 64,996 bbl capacity	203-T-0015	Cone Roof, Submerged Fill Pipe
203	Desulphurized Diesel tank #2	Desulphurized Diesel storage tank #2 with a nominal 64,996 bbl capacity	203-T-0016	Cone Roof, Submerged Fill Pipe

Unit Number	Unit Description	Emission Unit Description	TAG	Air Pollution Control Equipment
203	UVGO tank	UVGO storage tank with a nominal 33,312 bbl capacity	203-T-0017	Cone Roof, Submerged Fill Pipe
203	FCC Naphtha tank #1	FCC naphtha storage tank #1 with a nominal 33,312 bbl capacity	203-T-0018	Dome with IFR (Internal Floating Roof) and Submerged Fill Pipe
203	FCC Naphtha tank #2	FCC naphtha storage tank #2 with a nominal 33,312 bbl capacity	203-T-0019	Dome with IFR (Internal Floating Roof) and Submerged Fill Pipe
203	Alkylate tank #1	Alkylate storage tank #1 with a nominal 33,312 bbl capacity	203-T-0020	Dome with IFR (Internal Floating Roof) and Submerged Fill Pipe
203	Alkylate tank #2	Alkylate storage tank #2 with a nominal 33,312 bbl capacity	203-T-0021	Dome with IFR (Internal Floating Roof) and Submerged Fill Pipe
203	Diluent tank	Diluent tank with a nominal 33,312 bbl capacity	203-T-0022	Cone Roof, Submerged Fill Pipe
203	Fuel Oil tank #1	Fuel Oil tank #1 with a nominal 64,996 bbl capacity	203-T-0023	Cone Roof, Submerged Fill Pipe
203	Fuel Oil tank #2	Fuel Oil tank #2 with a nominal 64,996 bbl capacity	203-T-0024	Cone Roof, Submerged Fill Pipe
203	Light Naphtha tank #1	Light Naphtha tank #1 with a nominal 33,312 bbl capacity	203-T-0031	Dome with IFR (Internal Floating Roof) and Submerged Fill Pipe
203	Light Naphtha tank #2	Light Naphtha tank #2 with a nominal 33,312 bbl capacity	203-T-0032	Dome with IFR (Internal Floating Roof) and Submerged Fill Pipe
203	Light Slops tank	Light slops tank with a nominal 2,620 bbl capacity	203-T-0033	Cone Roof, Submerged Fill Pipe
203	Heavy Slops tank	Heavy slops tank with a nominal 2,620 bbl capacity	203-T-0034	Cone Roof, Submerged Fill Pipe

Unit Number	Unit Description	Emission Unit Description	TAG	Air Pollution Control Equipment
206	Wastewater treatment plant	Oil/Separator Inlet from Benzene Waste Operations NESHAP (BWON) Compliant plant with a design capacity of 155,000 gal/d**	-	Wastewater treatment plant must comply with the design requirements of 40 CFR 60 Subpart QQQ
207	Enclosed HC Operating Flare	Enclosed flare with pilot at 100 SCFH average of fuel gas, for handling up to 24.4 MMSCFD (including purges and fuel gas blowdown)	207-FL-1701	High temperature, optimal balance between air flow, gas/pollutant loading and low heating value
207	Acid Flare	Acid gas flare with pilot at 100 SCFH average of fuel gas, for handling up to 15.8 MMSCFD of gas.	207-FL-1702	High temperature, optimal balance between air flow, gas/pollutant loading and low heating value
207	HC Emergency Flare #1	HC Emergency Flare at 100 SCFH average of fuel gas, for handling up to 74.6 MMSCFD (including purges and fuel gas blowdown)	207-FL-1703	High temperature, optimal balance between air flow, gas/pollutant loading and low heating value
207	HC Emergency Flare #2	HC Emergency Flare at 100 SCFH average of fuel gas, for handling up to 88.8 MMSCFD (including purges and fuel gas blowdown)	207-FL-1704	High temperature, optimal balance between air flow, gas/pollutant loading and low heating value
208	Truck Loading-Unloading System	Dedicated normal service of loading/unloading refinery products (Gasoline, Jet Kerosene, Diesel and Fuel Oil).	-	Submerged Loading and dedicated service.
209	Rail Loading-Unloading System	Dedicated normal service of loading/unloading refinery products (Gasoline, Jet Kerosene, Diesel and Fuel Oil).	-	Submerged Loading and dedicated service
212	Firewater Diesel Pumps	Combustion gases (flue gas) from 600 HP x2 diesel firewater pump.	212-P-1201A/B/C	Firewater pumps. Normal operation less than 100 hours per year
215	Cooling Tower	Induced draft - counter flow Cooling Tower. Design Cooling Water Circulation Rate: 1,500 gpm	215-CT-1501A/B/C	Drift Eliminators Inherent to Design. Under normal operations 2 in service 1 in standby

Unit Number	Unit Description	Emission Unit Description	TAG	Air Pollution Control Equipment
216	Diesel/Natural gas-fired emergency generator set***	Combustion gases (flue gas) from 4700-HP emergency generator stack.	216-EG-1601A/B/C	Operating for less than 100 hours per year. The engines shall be certified to emissions standards as outlined under 40 CFR 60, Subparts IIII and JJJ. The engines shall be manufactured with the appropriate control equipment to meet these emissions standards
FUGITIVE	Process equipment leaks in VOC and Natural Gas service	Fugitive (leaks) emissions from process units throughout the refinery.	-	Leak Detection and Repair (LDAR) Program Screen level at 500 ppm

Taken from Table 1, Exhibit B - EMISSIONS INVENTORY FOR DAVIS REFINERY.
VEPICA, 2016. Doc. N° P-5715043-01-001-18042-I001.

Table 2. Davis Refinery Summary of Emissions without Add-on Controls

	Criteria Pollutants										HAPs
Emissions Unit	CO	Pb	PM<10	Filerable PM <10	PM <2.5	Filterable PM <2.5	Condensable PM	NO_X (as NO_2)	SO_2	VOC	Total HAPs
Leaks	0.00	0.00	0.00	0.00	0.00	0.00	0.00	0.00	0.00	243.72	40.35
Tanks	0.00	0.00	0.00	0.00	0.00	0.00	0.00	0.00	0.00	21.79	14.95
Stationary Combustion Sources	91.42	1.60E-03	13.06	3.26	13.06	3.26	9.79	97.95	1.92	17.61	6.41
Fluid Catalytic Cracking Unit	0.00	2.03E-03	50.14	33.16	45.65	28.67	16.98	186.28	664.88	577.20	5.39
Catalytic Reforming Unit	0.00	0.00	0.00	0.00	0.00	0.00	0.00	0.00	0.00	0.04	0.79
Sulfur Recovery Plant	2.15	0.00	0.00	0.00	0.00	0.00	0.00	0.47	0.20	1.50	0.00
Vacuum Systems	0.00	0.00	0.00	0.00	0.00	0.00	0.00	0.00	0.00	0.00	0.00
Blowdown System	0.83	0.00	0.01	0.01	0.01	0.01	0.00	3.66	5.20	0.15	0.00
Flares	0.25	4.38E-06	0.04	0.01	0.04	0.01	0.03	0.27	0.005	0.05	0.00
Wastewater	0.00	0.00	0.00	0.00	0.00	0.00	0.00	0.00	0.00	210.41	23.28
Cooling Towers	0.00	0.00	24.83	0.00	0.00	0.00	0.00	0.00	0.00	4.73	0.00
Rail Product Loading	0.00	0.00	0.00	0.00	0.00	0.00	0.00	0.00	0.00	1,713.49	0.00
Truck Product Loading	0.00	0.00	0.00	0.00	0.00	0.00	0.00	0.00	0.00	366.76	0.00
Fugitive Dust	0.00	0.00	1.33	0.00	0.00	0.00	0.00	0.00	0.00	0.00	0.00
Total STPY	**94.65**	**0.004**	**89.40**	**36.44**	**58.75**	**31.95**	**26.80**	**288.62**	**672.20**	**3,157.45**	**91.17**

Taken from Table 2, Exhibit B- EMISSIONS INVENTORY FOR DAVIS REFINERY. VEPICA, 2016. Doc. N° P-5715043-01-001-18042-I001.

Table 3. Davis Refinery Summary of Proposed Emission Controls

Source/Unit	Target Pollutant	Pollution Control Technologies Used	Assumed % Control
Leaks (Fugitive Emissions)	VOC	LDAR (Leak, Detection and Repair) program with 500 ppmv leak definition, and including differential light absorption and ranging (DIAL) or optical gas imaging (OGI) technology.	97% (valves), 93% pumps, 97% flanges, 97% sample points, (30% heavies). Program baseline of 500 ppm
Tanks	VOC	Double Seal and Wipers on IFR Tanks (NESHAP std). Vapor Recovery to product recycle on select fixed roof tanks	95%
Stationary Combustion Sources (Heater and Boilers)	CO NOx VOC HAPs PM SO_2	CO – Best Comb. Practices w/ Ultra Low NOx Burners NOx – SCR's w/ Ultra Low NOx Burners VOC / HAPs – Best Comb. Practices with Ultra Low NOx Burners PM – Venturi Scrubbers on larger heaters	CO – 96% NOx – 75% VOCs / HAPs – 75% PM – 70%
Fluidized Catalytic Cracking (FCC) Regeneration Vent	CO NOx. SO_2	CO– Best Comb. Practices / complete carbon burn regenerator design NOx – COP-NP Combustion Promotor OR Tri-Mer SO_2 – Wet Scrubber OR Dri-Sorb Catalyst	CO – 100% NOx – 98% SO2 – 99%
Catalytic Reforming Unit	HAPs	NA – minor emissions levels	NA
Sulfur Recovery Plants	SO_2	Lo-CAT with vent gases routed to thermal oxidizer Other pollutants are considered minor	SO2 – 99.9%
Blowdown System	CO NOx SO_2	Vapor recovery to product capture and emergency flaring only for upsets	99.8%
Flares	CO NOx VOC HAPs	Lower heating value of feed gases, requirements specified by EPA and NDDoH regulations. Flares will only be used during upset conditions.	98% +
Wastewater Treatment System	VOC HAPs	Covered API/CPI oil/water separators and induced/dissolved air flotation units Equalization tanks instead of open ponds. Vapor Recovery System	VOC – 95% HAPs – 55%
Product Loading	VOC	Vapor recovery to product recycle with upsets to emergency flares	98%
Fugitive (on-site vehicular) emissions	PM	Paving of areas of routine vehicle traffic. Maintain vehicle speeds to < 15 mph	$PM_{2.5}$ - 0.00054 lb/vmt PM_{10} - 0.0022 lb/vmt Silt load = 2.15E-02
Spent Catalyst	PM	De-minimus	NA – de-minimus

Taken from Exhibit C - EMISSIONS INVENTORY – CONTROLS TECHNOLOGY REVIEW FOR DAVIS REFINERY. VEPICA, 2016. Doc. N° P-5715043-01-001-18035-I001.

Table 4. Davis Refinery Summary of Potential to Emit

	Criteria Pollutants										HAPs
Emissions Unit	CO	Pb	PM<10	Filerable PM <10	PM <2.5	Filterable PM <2.5	Condensable PM	NO_X (as NO_2)	SO_2	VOC	Total HAPs
Leaks	0.00	0.00	0.00	0.00	0.00	0.00	0.00	0.00	0.00	21.06	2.39
Tanks	0.00	0.00	0.00	0.00	0.00	0.00	0.00	0.00	0.00	9.17	4.48
Stationary Combustion Sources	91.42	1.60E-03	8.00	2.00	8.00	2.00	6.00	46.40	1.92	17.61	1.62
Fluid Catalytic Cracking Unit	0.00	2.03E-05	1.00	0.66	0.91	0.57	0.34	3.73	6.65	5.77	0.87
Catalytic Reforming Unit	0.00	0.00	0.00	0.00	0.00	0.00	0.00	0.00	0.00	0.04	0.79
Sulfur Recovery Plant	2.15	0.00	0.00	0.00	0.00	0.00	0.00	0.47	0.20	1.50	0.00
Vacuum Systems	0.00	0.00	0.00	0.00	0.00	0.00	0.00	0.00	0.00	0.00	0.00
Blowdown System	0.83	0.00	0.01	0.01	0.01	0.01	0.00	3.66	5.20	0.15	0.00
Flares	0.25	4.38E-06	0.04	0.01	0.04	0.01	0.03	0.27	0.005	0.05	0.00
Wastewater	0.00	0.00	0.00	0.00	0.00	0.00	0.00	0.00	0.00	10.52	0.52
Cooling Towers	0.00	0.00	1.86	0.00	0.00	0.00	0.00	0.00	0.00	0.35	0.00
Rail Product Loading	0.00	0.00	0.00	0.00	0.00	0.00	0.00	0.00	0.00	2.81	0.00
Truck Product Loading	0.00	0.00	0.00	0.00	0.00	0.00	0.00	0.00	0.00	0.73	0.00
Fugitive Dust	0.00	0.00	1.33	0.00	5.65E-04	0.00	0.00	0.00	0.00	0.00	0.00
Total STPY	**94.65**	**1.62E-03**	**12.24**	**2.68**	**8.96**	**2.59**	**6.37**	**54.53**	**13.97**	**69.78**	**10.67**

Taken from Table 4, Exhibit B- EMISSIONS INVENTORY. VEPICA, 2016. Doc. N° P-5715043-01-001-18042-I001.

Table 5. Davis Refinery Phase 1 Summary of Potential to Emit

	Criteria Pollutants										HAPs
Emissions Unit	CO	Pb	PM<10	Filerable PM <10	PM <2.5	Filterable PM <2.5	Condensable PM	NO_X (as NO_2)	SO_2	VOC	Total HAPs
Leaks	0.00	0.0000	0.00	0.00	0.00	0.00	0.00	0.00	0.00	7.24	0.37
Tanks	0.00	0.0000	0.00	0.00	0.00	0.00	0.00	0.00	0.00	6.32	2.24
Stationary Combustion Sources	33.82	0.0006	4.83	1.21	4.83	1.21	3.62	36.23	0.71	6.51	0.60
Fluid Catalytic Cracking Unit	0.00	0.0000	0.00	0.00	0.00	0.00	0.00	0.00	0.00	0.00	0.00
Catalytic Reforming Unit	0.00	0.0000	0.00	0.00	0.00	0.00	0.00	0.00	0.00	0.03	0.55
Sulfur Recovery Plant	2.15	0.0000	0.00	0.00	0.00	0.00	0.00	0.47	0.20	0.64	0.00
Vacuum Systems	0.00	0.0000	0.00	0.00	0.00	0.00	0.00	0.00	0.00	0.00	0.00
Blowdown System	0.41	0.0000	0.00	0.00	0.00	0.00	0.00	1.83	2.60	0.08	0.00
Flares	0.21	3.72E-06	0.03	0.01	0.03	0.01	0.02	0.23	0.004	0.04	0.00
Wastewater	0.00	0.0000	0.00	0.00	0.00	0.00	0.00	0.00	0.00	5.23	0.26
Cooling Towers	0.00	0.0000	0.93	0.00	0.00	0.00	0.00	0.00	0.00	0.18	0.00
Rail Product Loading	0.00	0.0000	0.00	0.00	0.00	0.00	0.00	0.00	0.00	1.17	0.00
Truck Product Loading	0.00	0.0000	0.00	0.00	0.00	0.00	0.00	0.00	0.00	0.28	0.00
Fugitive Dust	0.00	0.0000	0.00	0.00	3.13E-04	0.00	0.00	0.00	0.00	0.00	0.00
Total STPY	**36.59**	**0.0006**	**5.80**	**1.22**	**4.86**	**1.22**	**3.65**	**38.76**	**3.51**	**27.72**	**4.01**

6 CRITERIA POLLUTANTS –AMBIENT AIR QUALITY STANDARDS

The Clean Air Act ***("CAA")*** requires states to develop a general plan to attain and maintain the National Ambient Air Quality Standards ***("NAAQS")*** in all areas of the country and a specific plan to attain the standards for each area designated nonattainment for a NAAQS. The EPA has established in 40 CFR 50, the NAAQS for *"criteria pollutants"*: nitrogen dioxide (NO_2), CO, sulfur dioxide (SO_2), particles finer than 10 microns in size (PM_{10}), particles finer than 2.5 microns in size ($PM_{2.5}$), ozone (of which VOCs are a precursor) and airborne lead (Pb). The EPA has approved North Dakota's State Implementation Plan ***("SIP")***, and has delegated the authority for approval of permits for new stationary sources of air contaminants subject to regulation under the CAA to the NDDH.

The North Dakota SIP identifies the emissions control requirements the state will rely upon to attain and/or maintain the primary and secondary NAAQS. Consequently, the NDDH has adopted in NDAC 33-15-02, as mandated by North Dakota Century Code 23-25-03.2 and 23-25-03-3, Ambient Air Quality Standards affecting petroleum refineries which are equivalent to federal rules or standards under the CAA.

North Dakota and National Ambient Air Quality Standards (AAQS) Criteria Pollutants (µg/m^3)

Averaging Period	Sulfur Dioxide (SO_2) µg/m^3	Hydrogen Sulfide (H_2S) µg/m^3	Particulates (PM_{10}) µg/m^3	Particulates (PM_{10}) µg/m^3	Carbon Monoxide (CO) µg/m^3	Nitrogen Dioxide (NO_2)µg/m^3	Ozone[2] (O_3) µg/m^3
Annual	80	-	50	12	-	100	-
24-hour	365[1]	140	150[1]	35	-	-	-
8-hour	-	-	-	-	10,000[1]	-	147
3-hour	1,300[1]	-	-	-	-	-	-
1-hour	196	280	-	-	40,000[1]	188	235

[1] One exceedance per year is permitted.
[2] VOCs are a precursor.

The proposed Davis Refinery is a *"designated air contaminant source"* under NDAC 33-15-14-01; therefore, it is subject to the permitting requirements and emission limitations for new stationary source of air contaminants subject to regulation, also known as *"criteria pollutants"* or *"regulated NSR pollutants"*, to ensure compliance with North

Dakota's SIP. North Dakota's SIP classifies sources of regulated NSR pollutants in accordance with Section 112 of the CAA.

Major Sources are defined in NDAC 33-15-14-06 as:

"(1) A major source under section 112 of the Federal Clean Air Act, and (2) A major stationary source of air contaminants, that directly emits or has the potential to emit, one hundred tons [90.68 metric tons] per year or more of any air contaminant subject to regulation (including any major source of fugitive emissions of any such contaminant, as determined by rule by the administrator of the United States environmental protection agency). For purposes of this definition, air contaminant subject to regulation does not include greenhouse gases as defined in title 40, Code of Federal Regulations, 86.1818-12(a)."

As allowed under the provisions of 33-15-14-06, minor sources of NSR regulated pollutants are those that do not exceed the major source thresholds for criteria pollutants under their physical and operational design, including the effect of add-on pollution controls or restrictions on hours of operation that are proposed as part of the design.

Based on the PTE of regulated NSR pollutants from the proposed facilities, summarized in Section 5 above, the proposed Davis Refinery qualifies as a Minor Synthetic Source of regulated NSR pollutants.

7 HAZARDOUS AIR POLLUTANTS AND THE AIR TOXICS POLICY

Under the EPA approved North Dakota SIP, codified in the North Dakota Air Pollution Control Rules, the NDDH has authority to establish limits of HAP emissions in accordance with section 33-15-02-04(3) which states, *"The ambient air shall not contain air contaminants in concentrations that would be injurious to human health or well-being or unreasonably interfere with the enjoyment of property or that would injure plant or animal life. The Department may establish, on a case-by-case basis, specific limits of concentration for these contaminants."*

North Dakota's Air Toxics Policy delineates the NDDH policy with respect to the control of routine releases of HAPs. The Air Toxics Policy is compliant with the residual risk provisions of the Clean Air Act and is applicable to all new or modified air contaminant sources, as designated in NDAC 33-15-14-01 of the North Dakota Air Pollution Control Rules, which are required to submit an application for a PTC under NDAC 33-15-14-02.

The North Dakota Air Pollution Control Rules adopt in whole or in part the Federal standards that regulate for both large and small sources of HAPs, under the authority of Title I, part A, Section 112 of the CAA. As with the standards for criteria pollutant, the EPA has developed national requirements for emissions of HAPs known as "National Emission Standards for Hazardous Air Pollutants ***("NESHAP")***" codified in 40 CFR Part 61, and requirements for specific categories of HAP emitting stationary sources codified in 40 CFR Part 63 "National Emission Standards for Hazardous Air Pollutants for Source Categories", also known as Maximum Achievable Control Technology ***("MACT")*** standards. NDAC 33-15-13 identifies the applicable requirements of 40 CFR 61, and NDAC 33-15-22 identifies the applicable requirements of 40 CFR 63, that have been adopted by the State of North Dakota.

As with sources of air contaminants, North Dakota's SIP classifies sources of HAPs in accordance with Section 112 of the CAA. Major sources of HAPs are those stationary sources with a PTE any single HAP in excess of 10 TPY or combined HAPs in excess of 25 TPY. Minor sources of HAPs, also called "area sources" are those that do not exceed the major source thresholds under their physical and operational design.

Based on the PTE of HAPs from the proposed facilities, the proposed Davis Refinery qualifies as an Area Source of HAPs.

7.1 STATE AIR TOXICS POLICY

The Policy for the Control of Hazardous Air Pollutants in North Dakota (Air Toxics Policy) is applicable to the proposed Davis Refinery and must be followed to ascertain the health-related risks represented by proposed new source of HAP emissions. In order to determine compliance with the NDDH *"Policy for the Control of Hazardous Air Pollutant Emissions in North Dakota"*, dispersion modeling is used to determine the maximum off-property, ground-level ambient concentration of each HAP emitted.

HAP emissions are classified into one of three categories:

1. known human carcinogens,
2. suspected or reasonably anticipated human carcinogen, and
3. noncarcinogen or substance lacking sufficient data to determine carcinogenicity.

These classifications are identified as Group 1, Group 2, and Group 3 HAP emissions, respectively. The NDDH recommends a three-tiered approach of decreasing conservatism to calculate the maximum off-property, ground-level ambient concentration of each HAP. Three tiers of analyses are not required if compliance with the Maximum Individual Carcinogenic Risk ***("MICR")*** and Maximum Acceptable Ambient Levels ***("MAAL")*** can be shown through Tier I and/or II. Since modeling for compliance with Significant Impact Levels for Class I and Class II areas was undertaken by Meridian, we completed a Tier III analysis, for combined HAPs and utilized the weighted concentration of the HAP emissions to compare to MICR and MAAL results. Results of this analysis are included in the detailed Modeling Analysis Report for Meridian which is submitted under separate cover.

8 PREVENTION OF SIGNIFICANT DETERIORATION (PSD) APPLICABILITY (40 CFR 52) - NEW SOURCE REVIEW (NSR)

According to 40 CFR 81.335, Billings County in North Dakota is an attainment or unclassifiable area for all criteria pollutants. New sources of emissions located in an attainment or unclassifiable area must be reviewed for applicability under an EPA-approved Prevention of Significant Deterioration ***("PSD")*** program. North Dakota implements an EPA-approved PSD program in accordance with the provisions of NDAC 33-15-15 which adopt in whole or in part the Federal PSD regulations (40 CFR 52). Ambient impacts analyses specified by the PSD rules are required if the source is classified as a *"major stationary source"* under the rules.

Petroleum refineries are a listed source category in the PSD rules. For listed sources categories, like refineries, fugitive emissions must be counted toward major source applicability. The proposed Davis Refinery is a new stationary source, thus, the PSD applicability analysis herein focuses on the new source provisions of the North Dakota PSD program as they may apply to the facility.

Specifically, the facility-wide PTE of a pollutant is considered "significant" if it exceeds the annual emission rates known as significant impact levels ***("SILs")***. If emissions of all regulated NSR pollutants are less than the SILs, PSD review is not required.

Summary of Class I and Class II Significant Impact Levels (μg/m^3)

	1-hour		3-hour		8-hour		24-hour		Annual	
Pollutant	**Class I**	**Class II**	**Class I**	**Class II**	**Class I**	**Class II**	**Class I**	**Class II**	**Class I**	**Class II**
SO_2	--	7.8	1.0	25	--	--	0.2	5	0.1	1
NO_2	--	7.5	--	--	--	--	--	--	0.1	1
PM_{10}	--	--	--	--	--	--	0.2	5	0.1	1
$PM_{2.5}$	--	--	--	--	--	--	0.07	1.2	0.06	0.3
CO		2,000	--	--	--	500	--	--	--	--

The SIP also identifies the allowable increments in air pollution at Class I, and Class II areas. PSD increments prevent the air quality in clean areas from deteriorating to the level set by the AAQS. The AAQS is a maximum allowable concentration or *"ceiling,"* while a PSD increment, on the other hand, is the maximum allowable increase in concentration that is allowed to occur above a baseline concentration for a pollutant. Significant deterioration is said to occur when the amount of new pollution would exceed the applicable PSD increment.

North Dakota / National Prevention of Significant Deterioration (PSD)
Class II Increments Criteria Pollutants (μg/m^3)

Averaging Period	Sulfur Dioxide (SO_2) μg/m^3	Hydrogen Sulfide (H_2S) μg/m^3	Particulates (PM_{10}) μg/m^3	Particulates (PM_{10}) μg/m^3	Carbon Monoxide (CO) μg/m^3	Nitrogen Dioxide (NO_2)μg/m^3	Ozone[2] (O_3) μg/m^3
Annual	80	-	50	12	-	100	-
24-hour	365[1]	140	150[1]	35	-	-	-
8-hour	-	-	-	-	10,000[1]	-	147
3-hour	1,300[1]	-	-	-	-	-	-
1-hour	196	280	-	-	40,000[1]	188	235

[1] One exceedance per year is permitted.
[2] VOCs are a precursor.

North Dakota / National Prevention of Significant Deterioration (PSD)
Class I Areas PSD Increments and Significant Impact Levels (μg/m^3)

Pollutant / Averaging Time	Significant Impact Level (μg/m^3)	PSD Increment (μg/m^3)
PM_{10}; Annual	0.1/0.2[1]	4
PM_{10}; 24 hour	0.2/0.3[1]	8
SO_2; Annual	0.1	2
SO_2; 24 hour	0.2	5
SO_2; 3 hour	1.0	25
NO_2; Annual	0.1	2.5

[1] North Dakota vs. National

In accordance with NDAC 33-15-15, *"the Prevention of Significant Deterioration (PSD) program means a major source preconstruction permit program administered by the department that has been approved by the administrator of the United States environmental protection agency and incorporated into the state implementation plan*

pursuant to 40 CFR 51.166 to implement the requirements of that section. Any permit issued by the department under the program is a major NSR permit."

The requirements of the PSD program only apply to Major Sources. Based on the PTE of the proposed facilities under their physical and operational design, including the effect of add-on pollution controls, the proposed Davis Refinery qualifies as a Synthetic Minor Source.

Even though PSD review is not triggered for minor sources of air pollution, the PTE of all regulated NSR pollutants by the proposed Davis Refinery were reviewed to determine if the facility-wide PTE of any pollutant is considered "significant". The results of the airshed modeling conducted for the proposed Davis Refinery, in accordance with NDDH approved modeling protocols, indicates that emissions of all regulated NSR pollutants are less than the PSD significant emission rates; confirming that complete PSD review is not required for the proposed Davis Refinery. As a Synthetic Minor Source the facility is not subject to the ambient impacts analysis requirements of the PSD program.

8.1 NORTH DAKOTA AIR QUALITY CONSTRUCTION PERMITS

The provisions of NDAC 33-15-14 prohibits the construction, installation or establishment of a new stationary source unless the owner or operator has filed an application for and received a Permit to Construct in accordance this chapter. A Permit to Construct from the NDDH Air Quality Section is required for any new stationary source, or modification to an existing source, within a source category designated in Section 33-15-14-01. The proposed Davis Refinery is a "designated air contaminant source" under NDAC 33-15-14-01; therefore, it requires a Permit to Construct.

Construction Permitting is based on the facility's PTE for Criteria Pollutants (CO, Pb, NOx, PM_{10}, $PM_{2.5}$, O_3, SO_2) and HAPs. PTE also includes the effect of add-on emission control technology, if enforceable by permit. The level of PTE determines what type of permit a facility falls under.

North Dakota's Permits to Construct fall into two main groups: minor sources and major (Title V) sources. Within minor sources are true minor sources with no federally enforceable limits and synthetic minor sources where a source accepts a federally

enforceable operating limit to stay under major source limits. Within major sources there are those subject to the additional requirements of North Dakota's PSD program. The table below summarizes permit types with their corresponding PTE limits.

Permit Types and PTE Limits

Permit Type	Criteria Air Pollutant Limit [1]	Combined Hazardous Air Pollutant (HAP) Limit [2]	Single HAP Limit	Federally Enforceable Limits (Y/N)
Minor Source	<100 tons/yr	< 25 tons/yr	< 10 tons/yr	No
Synthetic Minor Source [3]	**<100 tons/yr**	**< 25 tons/yr**	**< 10 tons/yr**	**Yes**
Major (Title V) Source [4]	≥100 tons/yr	≥ 25 tons/yr	≥ 10 tons/yr	Yes
PSD Major (Title V) Source [4]	≥250 tons/yr	≥ 25 tons/yr	≥ 10 tons/yr	Yes

[1]Criteria Pollutant Criteria Air Pollutant limit applies to each individual pollutant and is not a combined total amount.

[2] List of Hazardous Air Pollutants

[3] Sources that have the potential to emit 100 ton/yr or greater of a criteria pollutant, 10 ton/yr or greater of any hazardous air pollutant, or 25 ton/yr or greater of any combination of hazardous air pollutants, and the permittee accepts a federally enforceable limit in the Permit to Operate that limits the potential to emit to the same criteria specified for a minor source.

[4] In addition, some sources will require a Title V permit because of applicability under the Prevention of Significant Deterioration (PSD) program; PSD levels apply to construction permits not to operating permits.

NDDH may impose any reasonable conditions upon a permit to construct, including:

a. Sampling, testing, and monitoring of the facilities or the ambient air or both.
b. Trial operation and performance testing.
c. Prevention and abatement of nuisance conditions caused by operation of the facility.
d. Recordkeeping and reporting.
e. Compliance with applicable rules and regulations in accordance with a compliance schedule.
f. Limitation on hours of operation, production rate, processing rate, or fuel usage when necessary to assure compliance with this NDAC 33-15-14.

In accordance with the allowable provisions of 33-15-14, and based on the PTE of regulated NSR pollutants from the proposed Davis Refinery, under its physical and operational design and including the effect of add-on air pollution control equipment, the

proposed facility can qualify as a Synthetic Minor Source. The proposed emissions controls to limit air contaminant emissions to levels below Major Source thresholds are proven technologies that have been successfully implemented at other refineries. Emissions controls will include but not be limited to Low NOx burner design and Selective Catalytic Reduction for gas fired equipment, selected tanks with internal floating roof, vapor recovery on certain tanks and at truck and rail loading facilities, automated leak detection systems, and continuous emissions monitoring on select equipment to ensure that there are no exceedances of "Emissions allowable under the permit".

"Emissions allowable under the permit" have the meaning given in NDAC 33-15-14-06 and "*means a federally enforceable permit term or condition determined at issuance to be required by an applicable requirement that establishes an emissions limit (including a work practice standard) or a federally enforceable emissions cap that the source has assumed to avoid an applicable requirement to which the source would otherwise be subject.*"

Meridian will accept federally enforceable limits in the Permit to Construct subject to this permit action, limiting the facility-wide PTE of CO, NOx, PM_{10}, $PM_{2.5}$, O_3 (as VOCs), SO_2 and HAPs to the proposed limits specified in Table 4 of Section 5 in order to ensure compliance with Ambient Air Quality Standards and the Air Toxics Policy.

9 TITLE V APPLICABILITY

The provisions of 40 CFR 70 provides for the establishment of comprehensive State air quality permitting programs consistent with the requirements of Title V of the 1990 Clean Air Act Amendments (CAAA): North Dakota's federally-approved Part 70 permit program is codified in NDAC 33-15-14-06.

The proposed Davis Refinery qualifies as a Synthetic Minor Source and as such requires a PTC under NDAC 33-15-14-02. The PTC subject to this permit action application, includes federally enforceable limits of CO, NOx, PM10, PM2.5, O3 (as VOCs), SO_2 and HAPs, from the proposed facilities, to effectively limit emissions from the proposed Davis Refinery to below Major Source thresholds. Therefore, the proposed Davis Refinery is not subject to Title V of the 1990 Clean Air Act.

In accordance with the Minor Source Permit to Operate provisions of NDAC 33-15-14-03: *"no person may operate or cause the routine operation of an installation or source designated in section 33-15-14-01 without applying for and obtaining, in accordance with this section, a permit to operate. Application for a permit to operate a new installation or source must be made at least thirty days prior to startup of routine operation. Those sources that received a permit to construct under section 33-15-14-02, need only submit a thirty-day prior notice of proposed startup to satisfy the requirement to apply for a permit to operate under this subdivision."*

A Minor Source Permit to Operate for sources that received a permit to construct under section 33-15-14-02, will only be granted by NDDH after *"the applicant can show to the satisfaction of the department that the source is in compliance…"* Compliance is demonstrated through performance testing, and the dates and periods of trial operation for the purpose of performance or emission testing must be approved in advance by NDDH. Once the permit to construct is granted, and in accordance with the provisions of 33-15-14-03, Meridian will apply for a Permit to Operate the proposed Davis Refinery at least thirty days prior to the start-up of routine operations. In order to satisfy the Minor Source Permit to Operate application requirements, Meridian need only submit a thirty-day prior notice of proposed startup and ensure performance testing is completed in accordance with NDDH requirements.

10 REGULATORY FRAMEWORK

This section summarizes the primary applicable air quality regulations for the proposed refinery. In this section, a comprehensive analysis of the regulatory framework applicable to the proposed Davis Refinery is presented, as well as the justification of the type of permit Meridian will be applying for the facility.

10.1 SUMMARY OF STATE AND FEDERAL RULE APPLICABILITY:

The table below summarizes the state and federal regulations applicability for the proposed project.

Summary of State and Federal Regulations Applicability

Program / Standard	Code	Applicability
NORTH DAKOTA AIR POLLUTION CONTROL RULES	NDAC 33-15	Yes
General Provisions	NDAC 33-15-01	Yes
Ambient Air Quality Standards	NDAC 33-15-02	Yes
Restriction of Emission of Visible Air Contaminants	NDAC 33-15-03	Yes
Emissions of Particulate Matter Restricted	NDAC 33-15-05	Yes
Emission of Sulfur Compounds Restricted	NDAC 33-15-06	No
Control of Organic Compounds Emissions	NDAC 33-15-07	Yes
Control of Air Pollution from Vehicles and Other Internal Combustion Engines	NDAC 33-15-08	Yes
Prevention of Air Pollution Emergency Episodes	NDAC 33-15-11	Yes
Standards of Performance for New Stationary Sources	NDAC 33-15-12	Yes
Emission Standards for Hazardous Air Pollutants	NDAC 33-15-13	Yes
Designated Air Contaminant Sources, **Permit to Construct,** Minor Source Permit to Operate, Title V Permit to Operate	NDAC 33-15-14	Yes
Prevention of Significant Deterioration (PSD) of Air Quality	NDAC 33-15-15	Yes
Restriction of Odorous Air Contaminants	NDAC 33-15-16	Yes
Restriction of Fugitive Emissions	NDAC 33-15-17	Yes
Stack Heights	NDAC 33-15-18	Yes
Visibility Protection	NDAC 33-15-19	No
Acid Rain Program	NDAC 33-15-21	No
Emission Standards for HAP for Source Cateogories	NDAC 33-15-22	Yes
Fees	NDAC 33-15-23	Yes
Standards for Lead-based Paint Activities	NDAC 33-15-24	No
Regional Haze Requirements	NDAC 33-15-25	No

Program / Standard	Code	Applicability
NATIONAL AMBIENT AIR QUALITY STANDARDS (NAAQS)	40 CFR 50	Yes
NEW SOURCE REVIEW (NSR)	40 CFR 52	Yes
STANDARDS OF PERFORMANCE FOR NEW STATIONARY SOURCES, known as New Source Performance Standards (NSPS)	40 CFR 60	Yes
SUBPART A - General Provisions	40 CFR 60	Yes
SUBPART Db — Standards of Performance for Industrial-Commercial-Institutional Steam Generating Units (§§ 60.40c - 60.48c)	40 CFR 60	No
SUBPART Dc — Standards of Performance for Small Industrial-Commercial-Institutional Steam Generating Units (§§ 60.40c - 60.48c)	40 CFR 60	Yes
SUBPART Ja — Standards of Performance for Petroleum Refineries for Which Construction, Reconstruction, or Modification Commenced After May 14, 2007 (§§ 60.100a - 60.109a)	40 CFR 60	Yes
SUBPART Kb – Standards of Performance for Volatile Organic Liquid (VOL) Storage Vessels (Including Petroleum Liquid Storage Vessels) for which Construction, Reconstruction or Modification Commenced after July 23, 1984 (§§ 60.110a - 60.115a)	40 CFR 60	Yes
SUBPART VVa - Standards of Performance for Equipment Leaks of VOC in the Synthetic Organic Chemicals Manufacturing Industry for Which Construction, Reconstruction or Modification Commenced After November 7, 2006 (§§ 60.480a - 60.489a)	40 CFR 60	Yes[1]
SUBPART GGGa — Standards of Performance for Equipment Leaks of VOC in Petroleum Refineries for Which Construction, Reconstruction, or Modification Commenced After November 7, 2006 (§§ 60.590a - 60.593a)	40 CFR 60	Yes
SUBPART IIII – Standards of Performance for Stationary Compression Ignition Internal Combustion Engines	40 CFR 60	Yes
SUBPART NNN – Standards of Performance for Volatile Organic Compound (VOC) Emissions From Synthetic Organic Chemical Manufacturing Industry (SOCMI) Distillation Operations	40 CFR 60	Yes[2]
SUBPART QQQ — Standards of Performance for VOC Emissions From Petroleum Refinery Wastewater Systems (§§ 60.690 - 60.699)	40 CFR 60	Yes
NATIONAL EMISSION STANDARDS FOR HAZARDOUS AIR POLLUTANTS (NESHAPs)	40 CFR 61	Yes
SUBPART A - General Provisions	40 CFR 61	Yes
SUBPART J — National Emission Standard for Equipment Leaks (Fugitive Emission Sources) of Benzene (§§ 61.110 - 61.112)	40 CFR 61	Yes
SUBPART V — National Emission Standard for Equipment Leaks (Fugitive Emission Sources) (§§ 61.240 - 61.247)	40 CFR 61	Yes
SUBPART FF — National Emission Standard for Benzene Waste Operations (§§ 61.340 - 61.359)	40 CFR 61	Yes
NATIONAL EMISSION STANDARDS FOR HAZARDOUS AIR POLLUTANTS FOR SOURCE CATEGORIES (also known as Maximum Achievable Control Technology -MACT- standards and Generally Available Control Technology -GACT- standards)	40 CFR 63	Yes[3]

Program / Standard	Code	Applicability
SUBPART A - General Provisions	40 CFR 63	Yes
SUBPART ZZZZ -National Emission Standards for Hazardous Air Pollutants for Reciprocating Internal Combustion Engines	40 CFR 63	No[4]
SUBPART BBBBBB - National Emission Standards for Hazardous Air Pollutants for Source Category: Gasoline Distribution Bulk Terminal, Bulk Plant and Pipeline Facilities	40 CFR 63	Yes
SUBPART JJJJJJ -National Emission Standards for Hazardous Air Pollutants for Industrial, Commercial, and Institutional Boilers at Area Sources	40 CFR 63	No[5]
Risk Management Programs for Chemical Accidental Release Prevention	40 CFR 68	Yes
Title V Operating Permit	40 CFR 70	No
Compliance Assurance Monitoring	40 CFR 64	No
Acid Rain Requirements	40 CFR 72	No
Stratospheric Ozone Protection Requirements	40 CFR 82	No
Mandatory Greenhouse Gas Reporting	40 CFR 98	Yes

[1] Applicable portions referenced in 40 CFR 60 Subpart GGGa .

[2] Applicable to process units in which LPG, light Naphtha and Gasoline range compounds are generated as a product, co-product, by-product or intermediate.

[3] Only those Subparts applicable to Area Sources of HAPs.

[4] NDAC 33-15-22 has only adopted those provisions applicable to major sources of HAPs. The proposed Davis Refinery qualifies as an Area Source of HAPs.

[5] NDAC 33-15-22 has only adopted those provisions applicable boilers with a heat input of ten million Btu per hour or more.

10.2 STATE OF NORTH DAKOTA AIR QUALITY RULES

This section details the applicability to the proposed Davis Refinery of the State of North Dakota Air Pollution Control Rules codified in NDAC Chapters 33-15-01 through 33-15-25. Refer to Section 11 of this permit application for compliance demonstration for the North Dakota Air Pollution Control Rules.

10.2.1 General Provisions (33-15-01)

The general provisions of chapter 33-15-01 addresses the following: entry onto premises, authority, variances, circumvention, severability, land use plans and zoning regulations, measurement of air contaminants, shutdown and malfunction of an installation, requirements for notification, time schedule for compliance, prohibition of air pollution, “confidentiality" of records, enforcement, and compliance certifications. Meridian will be subject to the provisions of this chapter and will comply with the provisions of the chapter after construction of the proposed Davis Refinery.

10.2.2 Ambient Air Quality Standards (33-15-02)

The purpose of the State of North Dakota Ambient Air Quality Standards ***("AAQS")*** is to establish levels of air quality for the maintenance of public health and welfare and to provide guidance to governmental and other parties interested in abating air pollution. The North Dakota SIP identifies the emissions control requirements the state will rely upon to attain and/or maintain the primary and secondary NAAQS. Consequently, NDDH has adopted in NDAC 33-15-02, as mandated by North Dakota Century Code 23-25-03.2 and 23-25-03-3, Ambient Air Quality Standards affecting petroleum refineries which are equal to NAAQS under the CAA.

10.2.3 Restriction of Emission of Visible Air Contaminants (33-15-03)

The provisions of this chapter prohibit new sources from producing visible emissions of greater than 20 percent opacity, with the exception that 40 percent opacity is permissible for not more than one 6-minute period per hour. As a new source, the proposed Davis Refinery is subject to the restrictions of 33-15-03.

10.2.4 Emissions of Particulate Matter Restricted (33-15-05)

The provisions of 33-15-05-01 regulate particulate matter from "*any operation, process, or activity from which particulate matter is emitted except the burning of fuel for indirect heating in which the products of combustion do not come into direct contact with process materials.*" The FCC reactor, catalyst handling and regeneration at the CRUs, elemental sulfur handling from the SRU, thermal oxidizer and flares, as well as the emergency diesel generator and the diesel engine driven backup firewater pumps will be subject to the provisions of 33-15-05-01.

The provisions of 33-15-05-02 regulate particulate matter from indirect heating equipment *"in which fuel, including any products or byproducts of the manufacturing process, is burned for the primary purpose of producing steam, hot water, hot air, or other indirect heating of liquids, gases, or solids and, in the course of doing so, the products of combustion do not come into direct contact with process materials."* However, it exempts fuel burning equipment in which a gaseous fuel is burned alone or in combination with other gaseous fuels. At the proposed Davis Refinery, the process heaters and boilers, meet

the definition of indirect heating units, however, since they are fired on refinery fuel gas, are exempt from the provisions of 33-15-05-02.

10.2.5 Emissions of Sulfur Compounds Restricted (33-15-06)

This chapter applies to any installation in which fuel is burned, in which the SO_2 emissions are substantial due to the sulfur content of the fuel burned, and in which the fuel is burned primarily to produce heat. This chapter is not applicable to installations which are subject to a SO_2 emission limit under Chapter 33-15-12, Standards of Performance for New Stationary Sources. The proposed Davis Refinery is subject to the requirements of 40 CFR 60 Subpart Ja at its process heaters, boilers, flares, thermal oxidizers, refinery process vents and sulfur recovery units, and the requirements of 40 CFR 60 Subpart IIII at its emergency diesel generator and firewater diesel backup pumps, therefore, it is not subject to the provisions of this chapter.

10.2.6 Control of Organic Compounds Emissions (33-15-07)

The provisions of this chapter establish requirements for the construction of facilities that generate organic compounds and vapors and the manner of organic compounds and vapors disposal. The proposed Davis refinery will be subject to requirements outlined this chapter for water treatment facilities, tanks, loading facilities, pumps and compressors, organic vapors and H_2S emission control (via vapor recovery or flaring).

10.2.7 Control of Air Pollution from Internal Combustion Engines (33-15-08)

The provisions of this chapter prohibit the operation of any internal combustion engine from any source which emits *"any unreasonable and excessive smoke, obnoxious or noxious gases, fumes or vapor"*. The emergency diesel generator and the firewater diesel backup pumps will be driven by internal combustion engines which are subject to compliance with this chapter.

10.2.8 Prevention of Air Pollution Emergency Episodes (33-15-11)

The provisions of this chapter pertain to the NDDH declaring an air pollution emergency and its effect on the operations of sources of regulated air contaminants. When an air pollution emergency episode is declared by the Department, Meridian shall comply with the requirements contained in this chapter.

10.2.9 Standards of Performance for New Stationary Sources (33-15-12)

The North Dakota Standards of Performance for New Stationary Sources adopt in whole or in part the Federal NSPS regulations in 40 CFR 60. NDAC 33-15-12 identifies the applicable requirements of the Federal NSPS regulations adopted by the State. Consequently, the proposed Davis Refinery will be subject to the following provisions of NSPS:

Subpart Dc – Standards of Performance for Small _Industrial-Commercial-Institutional Steam Generating Units

Subpart Ja – Standards of Performance for Petroleum Refineries

Subpart Kb – Standards of Performance for Volatile Organic Liquid Storage Vessels (Including Petroleum Liquid Storage Vessels) for Which Construction, Reconstruction, or Modification Commenced After July 23, 1984

Subpart GGGa – Standards of Performance for Equipment Leaks of VOC Emissions in Petroleum Refineries

Subpart IIII – Standards of Performance for Stationary Compression Ignition Internal Combustion Engines

Subpart QQQ – Standards of Performance for VOC Emissions from Petroleum Refinery Wastewater Systems.

10.2.10 Emission Standards for Hazardous Air Pollutants (33-15-13)

The North Dakota Emission Standards of Hazardous Air Pollutants adopt in whole or in part the Federal NESHAPs in 40 CFR 61. NDAC 33-15-13 identifies the applicable requirements of the Federal NESHAP regulations adopted by the State. Consequently, the proposed Davis Refinery will be subject to the following provisions of 40 CFR 61:

Subpart J – National Emissions Standards for Equipment Leaks (Fugitive Emission Sources) of Benzene

Subpart V – National Emissions Standards for Equipment Leaks (Fugitive Emission Sources)

Subpart FF – National Emissions Standards for Benzene Waste Operations

10.2.11 Designated Air Contaminant Sources, Permit to Construct, Minor Source Permit to Operate, Title V Permit to Operate (33-15-14)

The Davis Refinery is a *"designated air contaminant source"* under NDAC 33-15-14-01; therefore, a permit to construct a new stationary source of air contaminants subject to regulation or "regulated NSR pollutants". Major sources are defined in accordance with Section 112 of the Federal Clean Air Act as those with a PTE any air contaminant subject to regulation in excess of 100 TPY, or any single HAP in excess of 10 TPY or combined HAPs in excess of 25 TPY. In accordance with the definitions of 33-15-14-06, air contaminant subject to regulation does not include greenhouse gases as defined in 40 CFR 86.1818-12(a). As allowed under the provisions of 33-15-14-06 minor sources are those that do not exceed the major source thresholds under their physical and operational design, including the effect of add-on pollution controls.

In accordance with the allowable provisions of 33-15-14, and based on the PTE of regulated NSR pollutants from the proposed Davis Refinery, under its physical and operational design and including the effect of add-on air pollution control equipment, Meridian is pursuing a PTC for the proposed Davis Refinery which includes proposed synthetic minor emission limits for regulated air contaminants.

Once the permit to construct is granted, and in accordance with the provisions of 33-15-14-03, Meridian must apply for a permit to operate the proposed Davis Refinery at least thirty days prior to the start-up of routine operations. In order to satisfy this requirement, Meridian need only submit a thirty-day prior notice of proposed startup and satisfy compliance requirements for a Minor Source Permit to Operate.

10.2.12 Prevention of Significant Deterioration of Air Quality (33-15-15)

The North Dakota Prevention of Significant Deterioration ***("PSD")*** regulations adopt in whole or in part the Federal PSD regulations. NDAC 33-15-15 identifies the applicable requirements of the Federal PSD regulations adopted by the State. As previously discussed, the proposed Davis Refinery qualifies as a Synthetic Minor Source and thus the facility is not subject to the ambient impacts analysis requirements of the PSD program.

10.2.13 Restriction of Odorous Air Contaminants (33-15-16)

In areas located outside a city or outside the area over which a city has exercised extraterritorial zoning as defined in ND Century Code 40-47-01.1, a person may not discharge into the ambient air any objectionable odorous air contaminant that measures seven odor concentration units or higher outside the property boundary where the discharge is occurring. The Davis Refinery is subject to the provisions of chapter 33-15-07 for controls of organic compound and H2S emissions and furthermore is required to be well-controlled for emissions to meet the Minor Synthetic Source levels provisions of chapter 33-15-14, so odorous emissions from the proposed Davis Refinery are not anticipated.

10.2.14 Restriction of Fugitive Emissions (33-15-17)

This chapter restricts fugitive emissions from any source without taking reasonable precautions to prevent such emissions from causing air pollution. The proposed Davis Refinery is a designated source of air pollution, and as such, quantifiable fugitive emissions must be accounted for in the refinery-wide PTE estimation and must be controlled to ensure the proposed synthetic minor emission limits for CO, SO2, NOx, VOCs and HAPs are met.

10.2.15 Stack Heights (33-15-18)

The general provisions of this chapter restrict the use of stack heights above good engineering practices (GEP) as well as other dispersion techniques to affect the concentration of a pollutant in the ambient air. Stack heights at the proposed Davis Refinery will not exceed GEP or use other dispersion techniques described in 33-15-18-01 to affect the degree of emission limitation required.

10.2.16 Visibility Protection (33-15-19)

New major sources as defined in Chapter 33-15-15 are required to demonstrate to NDDH that the actual emissions of visibility-impairing pollutants from the source, including fugitive emissions, will not cause or contribute to adverse impact on visibility within any federal Class I area if such pollutants are emitted in significant quantities. The proposed

Davis Refinery qualifies as a Minor Synthetic Source and as such not subject to the provisions of this chapter.

10.2.17 Acid Rain Program (33-15-21)

The proposed Davis Refinery is not subject to the Acid Rain Program provisions of 40 CFR Part 72-28, and consequently, not subject to the provisions of North Dakota's Acid Rain Program.

10.2.18 Emissions Standards for Hazardous Air Pollutants for Source Categories (33-15-22)

The North Dakota Emission Standards for Hazardous Air Pollutants for Source Categories adopt in whole or in part the Federal MACT regulations in 40 CFR 63. NDAC 33-15-17 identifies the applicable requirements of the Federal MACT regulations adopted by the State. Considering the proposed Davis Refinery qualifies as a Minor Synthetic Source it will only be subject to the applicable Area Source provisions of 40 CFR 63:

BBBBBB – National Emission Standards for Hazardous Air Pollutants for Source Category: Gasoline Distribution Bulk Terminals, Bulk Plants, and Pipeline Facilities

10.2.19 Fees (33-15-23)

Meridian is responsible for a $350 filing fee for construction permit applications, plus any additional fees based on actual processing costs.

10.2.20 Standards for Lead-Based Paint Activities (33-15-24)

This chapter specifies requirements for activities related to lead -based paint. The proposed Davis Refinery does not include any lead-based paint activities and thus is not subject to these requirements.

10.2.21 Regional Haze Requirements (33-15-25)

This chapter contains requirements for Best Available Retrofit Technology ***("BART")***-eligible sources, namely, fossil-fuel-fired steam electric plants. The proposed Davis Refinery is not a BART-eligible source and therefore not subject to the requirements of this chapter.

10.3 CODE OF FEDERAL REGULATIONS

10.3.1 National Ambient Air Quality Standards

Primary NAAQS define levels of air quality that the US EPA deems necessary to protect the public health. Secondary NAAQS define levels of air quality that the US EPA judges necessary to protect the public welfare (i.e., wildlife, national monuments, vegetation, visibility, and property values) from any known, or anticipated adverse effects of a pollutant.

As part of the PSD analysis, major sources or modifications of air pollution are required to demonstrate compliance with the NAAQS for pollutants emitted in a significant amount. The proposed Davis Refinery the PTE for NSR pollutants is less than SERs, further analysis -is unnecessary.

10.3.2 New Source Performance Standards

An NSPS is applicable to certain categories of affected facilities that are constructed, modified, or reconstructed and that meet other applicability criteria on or after a compliance date upon which a relevant subpart applies. The following sections provide a summary of NSPS applicability and emission limits for petroleum refineries. Refer to Section 11 of this permit application for compliance demonstration for NSPS.

Subpart A – General Provisions

If an individual NSPS subpart is applicable to a project, the general provisions of NSPS Subpart A also apply.

Subpart Db – Standards of Performance for Industrial-Commercial- Institutional Steam Generating Units

No individual steam generating combustion unit at the proposed refinery will have a heat input capacity of 100 MMBtu/hr or greater; therefore, 40 CFR 60 Subpart Db does not apply.

Subpart Dc – Standards of Performance for Small Industrial-Commercial- Institutional Steam Generating Units

This subpart is only applicable to steam generating units that have a heat input capacity of 10-100 million Btu/hr and commence construction after June 9, 1989. The units subject to Subpart Dc include the refinery's Utility Steam Boilers.

Subpart Ja – Standards of Performance for Petroleum Refineries for Which Construction, Reconstruction, or Modification Commenced after May 14, 2007

This subpart applies to fuel gas combustion devices at petroleum refineries. Subpart Ja defines "petroleum refinery" as *"any facility engaged in producing gasoline, kerosene, distillate fuel oils, residual fuel oils, lubricants, asphalt (bitumen) or other products through distillation of petroleum or through redistillation, cracking, or reforming of unfinished petroleum derivatives."* Since the facility produces products through distillation of petroleum, it is subject to this subpart. The units subject to regulation under this subpart include refining units (ADUs, VDU, Hydrotreaters, CRUs, Isomerization, Alkylation) process heaters, flares, fluid catalytic cracking unit and the thermal oxidizer of the sulfur recovery unit.

Subpart Kb – Standards of Performance for Volatile Organic Liquid Storage Vessels (Including Petroleum Liquid Storage Vessels) for Which Construction, Reconstruction, or Modification Commenced After July 23, 1984

This subpart applies to each storage tank with a capacity greater than 75 cubic meters (approximately 19,800 gallons) used to store volatile organic liquids, except that the subpart does not apply to storage tanks with a capacity greater than or equal to 151 cubic meters (approximately 39,890 gallons) storing a liquid with a maximum true vapor pressure less than 3.5 kilopascals (kPa) or with a capacity greater than or equal to 75 cubic meters but less than 151 cubic meters storing a liquid with a maximum true vapor pressure less than 15.0 kPa. Based upon these criteria, tanks storing Crude Oil, are subject to Subpart Kb. Tanks associated with the Gasoline blending pool are regulated in accordance with 40 CFR 63 Subpart BBBBBB.

Subpart GGGa – Standards of Performance for Equipment Leaks of VOC in Petroleum Refineries for Which Construction, Reconstruction, or Modification Commences after November 7, 2006

Subpart GGGa applies to valves, pumps, pressure relief devices, etc. in VOC service at petroleum refineries. Therefore, equipment at the facility will be subject to this subpart. The subpart establishes standards for equipment as well as leak detection and repair requirements and references requirements in 40 CFR 60, Subpart VVa – Standards of Performance for Equipment Leaks of VOC in the Synthetic Organic Chemicals Manufacturing Industry for Which Construction, Reconstruction or Modification Commenced After November 7, 2006.

Subpart IIII – Standards of Performance for Stationary Compression Ignition Internal Combustion Engines

The provisions of this subpart are applicable to owners, and operators of stationary compression ignition ***("CI")*** internal combustion engines ***("ICE")***. The emergency generator engine and backup firewater pump engines are subject to the requirements of this subpart.

Subpart NNN – Standards of Performance for Volatile Organic Compound (VOC) Emissions From Synthetic Organic Chemical Manufacturing Industry (SOCMI) Distillation Operations

Subpart NNN applies to distillation units part of process units, that produce any of the chemicals listed in § 60.667 (e.g., Butanes, Pentanes, Benzene, Hexanes, Toluenes, Xylenes) as a product, co-product, by-product, or intermediate, for which construction, modification, or reconstruction commenced after December 30, 1983.

Distillation Unit has the meaning given is 40 CFR 60.661 *"device or vessel in which distillation operations occur, including all associated internals (such as trays or packing) and accessories (such as reboiler, condenser, vacuum pump, steam jet, etc.), plus any associated recovery system."*

Process unit has the meaning given is 40 CFR 60.661 *"equipment assembled and connected by pipes or ducts to produce, as intermediates or final products, one or more of*

the chemicals in 60.667. A process unit can operate independently if supplied with sufficient fuel or raw materials and sufficient product storage facilities."

This subpart establishes standards that limit the emissions from vent streams associated with the operation of the subject process units and include requirements for the monitoring of emissions. The process units within the proposed Davis Refinery which are associated with the generation of LPG, light naphtha and gasoline range compounds as a product, co-product, by-product, or intermediate, are subject to the applicable provisions of this subpart. These process units include Atmospheric and Vacuum Distillation, Hydrotreating, FCCU, CRU & Benzene Saturation, Isomerization and Alkylation.

Supbart QQQ – Standards of Performance for VOC Emissions from Petroleum Refinery Wastewater Systems

Subpart QQQ applies to wastewater systems at petroleum refineries for which construction, modification, or reconstruction is commenced after May 4, 1987. The affected facilities of the Davis Refinery to which Subpart QQQ applies are individual drain systems and oil-water separators. Each oil-water separator tank, slop oil tank, storage Stormwater sewer systems and wastewater treatment system ancillary equipment that does not come in contact with or store oily wastewater, is not subject to these requirements.

10.3.3 National Emission Standards for Hazardous Air Pollutants (40 CFR 61)

The National Emission Standards for Hazardous Air Pollutants (NESHAPs) are contained within 40 CFR 61. Part 61 applies to owners or operators of stationary sources for which a standard is prescribed under this part. Refer to Section 11 of this permit application for compliance demonstration with NESHAPs.

Subpart J – National Emissions Standards for Equipment Leaks (Fugitive Emission Sources) of Benzene

The provisions of this subpart apply to each of the following sources that are intended to operate in benzene service: pumps, compressors, pressure relief devices, sampling connection systems, open-ended valves or lines, valves, connectors, surge control vessels, bottoms receivers, and control devices or systems required by this subpart.

Subpart V – National Emissions Standards for Equipment Leaks (Fugitive Emission Sources)

The provisions of this subpart apply to each of the following sources that are intended to operate in volatile hazardous air pollutant (VHAP) service: pumps, compressors, pressure relief devices, sampling connection systems, open-ended valves or lines, valves, connectors, surge control vessels, bottoms receivers, and control devices or systems required by this subpart.

Subpart FF – National Emissions Standards for Benzene Waste Operations

Subpart FF applies to petroleum refineries and certain other industrial facilities and prescribes waste and water quality management to reduce benzene emissions from waste streams. The provisions of this subpart apply to individual drain systems used to convey process wastewater from a process unit, product storage tank, or waste management unit to a waste management unit. Individual drain systems include all process drains and common junction boxes, together with their associated sewer lines and other junction boxes, down to the receiving wastewater treatment system. Waste that is contained in a segregated stormwater sewer system and any gaseous stream from a waste management unit, treatment process, or wastewater treatment system routed to a fuel gas system, are exempt from compliance with the provisions of this subpart. The proposed wastewater treatment system is subject to these requirements.

10.3.4 National Emission Standards for Hazardous Air Pollutants for Source Categories (40 CFR 63)

40 CFR 63 establishes national emission standards for source categories that emit HAPs above major source thresholds. It also establishes national emission standards for area source which are defined as *"any stationary source of hazardous air pollutants that is not a major source as defined in this part"*. 40 CFR 63 is also known as Maximum Achievable Control Technology (MACT) standards for Major Sources and Generally Available Control Technology (GACT) standards for Area Sources. The major source thresholds are 10 TPY for any single HAP and/or 25 TPY of all combined HAPs. Based on its PTE the Davis Refinery qualifies as an area source of HAPs and thus only applicable GACT

standards have been reviewed. Refer to Section 11 of this permit application for compliance demonstration with GACT standards:

Subpart ZZZZ – National Emission Standards for Hazardous Air Pollutants for Reciprocating Internal Combustion Engines (RICE)

The RICE NESHAP requirements for an engine depend on whether the facility is a major source or an area source of HAP. The requirements also depend on factors including the engine size and type, construction date, and application (non-emergency or emergency). However, the State of North Dakota has only adopted in their Air Pollution Control Rules (NDAC Chapter 15) the requirements that are applicable to major sources of HAPs. Because the emergency generator and backup firewater pump will be driven by new emergency engines located at an Area Source of HAPs, the proposed Davis Refinery is not subject to the provisions of 40 CFR 63 Subpart ZZZZ.

Subpart BBBBBB – National Emission Standards for Hazardous Air Pollutants for Gasoline Distribution Bulk Terminals, Bulk Plants, and Pipeline Facilities

This subpart establishes national emission limitations and management practices for HAPs emitted from area source gasoline distribution bulk terminals, bulk plants, and pipeline facilities. This subpart also establishes requirements to demonstrate compliance with the gasoline handling facilities emission limitations and management practices. The proposed refinery is subject to 40 CFR 63 Subpart BBBBBB because the facility includes a gasoline bulk terminal.

Subpart JJJJJJ – National Emission Standards for Hazardous Air Pollutants for Industrial, Commercial, and Institutional Boilers at Area Sources

The provisions of this subpart apply to industrial, commercial, or institutional boiler as defined in § 63.11237, that is located at, or is part of, an area source of hazardous air pollutants (HAP). Only the requirements that are applicable to boilers with a heat input of ten million BTU per hour or more have been adopted by the State of North Dakota in its Emission Standards for HAPs for Source Categories (NDAC 33-15-22). Gas boilers are specifically excluded from the requirements of Subpart JJJJJJ. Since the boilers at the

proposed Davis Refinery are fired on gas (either refinery gas or natural gas), the requirements of this subpart are not applicable.

10.3.5 Chemical Accident Prevention Provisions (40 CFR Part 68)

The Risk Management Program (RMP) for Chemical Accidental Release Prevention applies to facilities that produce, process, store, or use any regulated toxic or flammable substance in excess of the thresholds listed in 40 CFR 68.130. The Davis Refinery will produce, process and store of LPG, gasoline and RMP-regulated flammable substances in amounts above threshold quantities. Meridian will comply with the provisions RMP applicable to the facility.

10.3.6 Compliance Assurance Monitoring (40 CFR Part 68)

The North Dakota Compliance Assurance Monitoring ("***CAM***") provisions adopt in whole or in part the Federal CAM requirements of 40 CFR 64. NDAC 33-15-14 applies to individual emission units located at major sources, on a pollutant by pollutant basis, termed pollutant specific emissions unit ("***PSEU***"). The CAM rule exempts the permittee from the additional monitoring requirements in situations in which continuous compliance monitoring is already specified in an operating permit.

In general, CAM applies to emission units meeting the following criteria:

- The emission unit is subject to an emission limit or standard (including limits and standards contained in the SIP) for an air pollutant regulated by Part 70;
- Compliance with the applicable limit or standard is achieved through the use of add-on control equipment; and
- The emission unit has pre-controlled potential emissions of the applicable regulated air pollutant that are equal to or greater than 100 percent of the Part 70 major source level for that pollutant.

While the proposed Davis Refinery would not be a Major Source, some PSEUs at the proposed refinery meet the three criteria subjecting an emission unit to the CAM provisions of 40 CFR Part 64. This includes the storage facilities, loading facilities and the FCCU. NSPS Subpart Ja already requires compliance monitoring of the FCCU

emissions, and 40 CFR 63 Subpart BBBBBB requires compliance monitoring of storage and loading facilities.

10.3.7 Acid Rain provisions (40 CFR PARTS 72-78)

The acid rain provisions of the Clean Air Act are applicable to utilities and other facilities that combust fossil fuel to generate electricity for wholesale or retail sale. The proposed Davis Refinery will not generate electricity for wholesale or retail sale, therefore the acid rain provisions are not applicable to the proposed facility.

10.3.8 Mandatory Greenhouse Gas Reporting (40 CFR 98)

A facility that contains any source category that is listed in Table A-3 of this subpart in any calendar year starting in 2010. For these facilities, the annual GHG report must cover stationary fuel combustion sources (40 CFR 98 Subpart C), miscellaneous use of carbonates (40 CFR 98 Subpart U), and all applicable source categories listed in Table A-3 and Table A-4 of this subpart.

Petroleum refineries are a source category subject to the Mandatory Greenhouse Gas Reporting rule regardless of the quantity of actual GHG emissions from the source. In accordance with 40 CFR Part 98.2, the proposed Davis Refinery will be subject to the monitoring, recordkeeping, and reporting requirements of actual CHG emissions from the FCC; the CRUs; blowdown systems; storage tanks; process equipment components (compressors, pumps, valves, pressure relief devices, flanges, and connectors) in gas service; tanker truck, and rail loading operations; flares; and sulfur recovery plants; as defined in 40 CFR Part 98, Subpart Y – Petroleum Refineries; in addition to the monitoring, recordkeeping, and reporting requirements of actual CHG emissions for General Stationary Fuel Combustion Sources (40 CFR Part 98 Subpart C), Industrial Wastewater Treatment (40 CFR Part 98, Subpart I), and Suppliers of Petroleum Products (40 CFR Part 98, Subpart MM).

11 COMPLIANCE WITH THE AIR TOXICS POLICY

The Air Toxics Policy is compliant with the residual risk provisions of the Clean Air Act and is applicable to all new or modified air contaminant sources, as designated in NDAC 33-15-14-01 of the North Dakota Air Pollution Control Rules, which are required to submit an application for a PTC under NDAC 33-15-14-02.

As detailed in Section 10 of this permit application, the proposed Davis Refinery is subject to certain State regulations and Federal regulations, as adopted by the State of North Dakota, that impose emission standards and operational limits from the refinery's processing units and equipment. The following sections detail the applicable emission standards and operational limit requirements and details Meridian's intended demonstration of compliance with the applicable regulations. Therefore, only the emissions standards of the applicable regulatory requirements are addressed in this section.

11.1 AMBIENT AIR QUALITY STANDARDS (33-15-02)

To determine compliance with AAQSs, air dispersion modeling of the emission sources associated to the proposed Davis Refinery was conducted. The modeling was conducted in accordance with the Division of Air Quality Criteria Pollutant Modeling Requirements for a Permit to Construct, Site Specific Guidance issued in June 2016 by the Department for the Davis Refinery and other Departments and EPA guidance and policy documents, and the pre-application dispersion modeling protocol dated August 2016 and related comments of the Department received in a memo dated September 16, 2016. The of the the Air Dispersion Modeling indicate that the potential emissions from the proposed Davis Refinery do not exceed significance levels for impacts to adjacent properties and will therefore not cause an exceedance of either the AAQS or the PSD Class I increment levels and Air Quality Related Values for the Theodore Roosevelt Memorial National Park. The results of the Air Dispersion Modeling are summarized in Section 12 of this permit application.

11.2 OPACITY LIMITS (NDAC 33-15-03)

Opacity limitations are provided for in State regulations through NDAC 33-15-03 which restricts emissions of visible air contaminants. It is expected that the proposed Davis Refinery will be compliant with the 20 percent opacity standard since emission units at will fire natural gas or refinery fuel gas, which are considered to not cause opacity concerns from combustion. Therefore, the proposed Davis Refinery will be considered to operate in compliance with the opacity standard, unless otherwise noted by visual observation.

In any case, Meridian will demonstrate compliance with the above State regulations by ensuring emission units at the proposed Davis Refinery are designed to meet the limitations imposed in NDAC 33-15-03, which apply at all times, except as allowed by NDAC 33-15-03-04. All non-flare sources will comply with an opacity limit of 20% except for one six-minute period per hour when 40% opacity is permissible. The refinery flares will comply with an opacity limit of 20% except for one six-minute period per hour when 60% opacity is permissible.

11.3 PARTICULATE MATTER RESTRICTIONS (CHAPTER 33-15-05)

Only the provisions of NDAC 33-15-05-01 are applicable to the proposed Davis Refinery. The FCC reactor, catalyst handling and regeneration at the CRUs, elemental sulfur handling from the SRU, thermal oxidizer and flares, as well as the emergency diesel generator and the diesel engine driven backup firewater pumps are subject to the emission limitations in Table 3 of NDAC 33-15-05-01. The equipment affected by these provisions will be designed to meet the most stringent limitations between NDAC 33-15-05-01 and the provisions of NSPS Subpart Ja.

11.4 SULFUR COMPOUNDS RESTRICTIONS (CHAPTER 33-15-06)

This chapter is not applicable to installations which are subject to an $S0_2$ emission limit under Chapter 33-15-12, Standards for Performance for New Stationary Sources, or to installations which burn pipeline quality natural gas. Refineries have $S0_2$ emission limits under 40 CFR Part 60 Subpart NSPS Ja; therefore, the proposed Davis Refinery is exempt from compliance with Chapter 33-15-06.

11.5 CONTROL OF AIR POLLUTION FROM VEHICLES AND OTHER INTERNAL COMBUSTION ENGINES (CHAPTER 33-15-08)

This chapter restricts the operation of internal combustion engines which emit from any source unreasonable and excessive smoke, obnoxious or noxious gas, fumes or vapor. The emergency generator and backup firewater pump engines are subject to this chapter's requirements, and will demonstrate compliance through designs compliant with the requirements of 40 CFR Part 60 Subpart NSPS IIII.

11.6 CONTROL OF ORGANIC COMPOUNDS EMISSIONS (33-15-07)

The provisions of this chapter establish requirements for organic compound facilities and the disposal of organic compounds. The proposed Davis refinery will be subject to requirements outlined this chapter for water treatment facilities, tanks, loading facilities, pumps and compressors, and emission control of organic vapors and H_2S (via vapor recovery or flaring). Meridian will comply with the provisions of this chapter through:

- Oily water treatment system compliant with 40 CFR 60 Subpart QQQ and 40 CFR 61 Subpart FF.
- Storage tanks meeting or exceeding the requirements of 40 CFR 60 Subpart Kb, even if not subject to the requirements of this subpart. Gasoline pool will be IFR tanks meeting the requirements of 40 CFR 63 Subpart BBBBBB. Crude oil, gasoline pool and jet fuel tanks will be IFR tanks fitted with double seals, and gasketed fittings, with access hatches that will be bolted down when closed. Fixed roof tanks storing diesel and light and heavy slops, will be connected to a closed vent system and control device to control emissions in accordance with §60.112b(3), even though diesel tanks and heavy slops are not subject to the provisions of Subpart Kb. All storage tanks with be fitted with and filled through a submerged fill pipe.
- Tank car and truck loading facilities compliant with 40 CFR 63 Subpart BBBBBB.
- Rotating pumps and compressors in VOC service compliant with 40 CFR 60 Subparts GGGa and VVa, and 40 CFR 61 Subparts J and V.
- Blowdown and flare system compliant with 40 CFR 60.18.

11.7 NEW SOURCE PERFORMANCE STANDARDS (NDAC 33-15-12)

As discussed in Section 10.3.2, the proposed Davis Refinery will be subject to NSPS. This section details compliance demonstration for NSPS that are applicable to the proposed Davis Refinery. Meridian will comply with all general provisions of NSPS (Subpart A), including all applicable recordkeeping and notifications requirements.

11.7.1 Standards of Performance for Small Industrial-Commercial-Institutional Steam Generating Units (40 CFR 60 Subpart Dc)

Subpart Dc applies to each steam generating unit, defined as a device that combusts any fuel or byproduct/waste and produces steam or heats any heat transfer medium, that commences construction, reconstruction, or modification after June 9, 1989, and has a heat input capacity of 100 MMBtu or less, but greater than or equal to 10 MMBtu/hr. The proposed Davis Refinery steam generation boilers (202-PK-0201A, 202-PK-0201B, 202-PK-0201C) will fire exclusively on refinery fuel gas. Therefore, only the recordkeeping requirements of Subpart Dc apply. Meridian will demonstrate compliance with the NSPS by using fuel certification records and maintaining records of the amount of fuel combusted by the steam boilers during each calendar month. No other emission standards of apply to these units.

11.7.2 Standards of Performance for Equipment Leaks of VOC in Petroleum Refineries for Which Construction, Reconstruction, or Modification Commences after November 7, 2006 (40 CFR Subpart GGGa)

Subpart GGGa applies to valves, pumps, pressure relief devices, etc. in VOC service at petroleum refineries. The subpart establishes standards for equipment as well as leak detection and repair requirements and references requirements in 40 CFR 60, Subpart VVa – Standards of Performance for Equipment Leaks of VOC in the Synthetic Organic Chemicals Manufacturing Industry. Meridian will demonstrate compliance with this subpart via implementation of pumps in VOC service with double mechanical seals, enhanced valve packing, no open ended lines and connection of pressure relief devices, sampling connecting systems, surge control vessels and bottoms receivers to closed-vent systems routed to fuel gas or flare in accordance with this subpart and 40 CFR 61 Subparts

J and V. Further, in order to meet or exceed the requirements of 40 CFR 60 Subpart VVa, and those of 40 CFR 61 Subparts J and V, Meridian has elected to comply with the more stringent leak definitions of 40 CFR 63 Subpart H through the implementation of an LDAR program with a screen value of 500 ppm as currently recommended by EPA instead of the 2,000 to 10,000 ppmv leak definitions of NSPS.

In EPA's estimations the implementation of a facility LDAR program can reduce emissions by at least 63% at Petroleum Refineries[1]. The implementation of any LDAR program is expected to alter not only the prevalence of leaks, but the relative magnitude of leaks above the action level. Furthermore, the lower the leak action level an LDAR program uses, the relative magnitude and number of leaks is expected to be much less than for facilities that use a higher screening level or do not have an LDAR program.

Meridian's proposed LDAR program assumes monitoring and directed maintenance with a maximum leak definition of 500 ppmv for all components other than compressors. Meridian's facility integrity management system for the Davis Refinery will include the use of advanced monitoring methods such as differential light absorption and ranging (DIAL) or optical gas imaging (OGI) technology that can visualize gas leaks using ultra-sensitive passive infrared sensing technology, as part of, and complementing, its proposed LDAR program to improve operational and safety practices so that leaks can be identified more efficiently and fixed soon as practicable.

Based on the level of LDAR program proposed for the Davis Refinery; the frequence of monitoring and the lower the leak action level, Meridian's proposed LDAR should achieve fugitive emissions reductions equivalent to those attainable under the Texas Commission on Environmental Quality (TCEQ) approved 28LAER program. Fugitive emissions control efficiencies under the TCEQ 28LAER program and leak detection thresholds are summarized in the following table.

[1] EPA's Leak Detection and Repair: A Best Practices Guide, October 2007. EPA-305-D-07-001

		LDAR Program equivalent to TCEQ 28LAER	Leak Threshold (ppmv/h)
Valves	Gas	97%	500
	Light Liquid	97%	500
	Heavy Liquid	0%	500
Pumps	Light Liquid	85%	500
	Heavy Liquid	85%	500
Compressors		85%	10000
Pressure Relief Gas Valves		97%	500
Flanges	Gas	97%	500
	Light Liquid	97%	500
	Heavy Liquid	30%	500
Sampling Connections		97%	500

11.7.3 Standards of Performance for Petroleum Refineries for Which Construction, Reconstruction, or Modification Commenced After May 14, 2007 (40 CFR 60 Subpart Ja)

Subpart Ja applies to fuel gas combustion devices at petroleum refineries. In the case of the proposed Davis Refinery, this subpart applies to:

- Fuel Gas Combustion Devices (process heaters from ADUs, VDU, Hydrotreaters, CRUs, Isomerization, Alkylation)
- SRU (process vents and thermal oxidizer)
- FCCU (process vents)
- Flares

A summary of requirements of NSPS Subpart Ja which will apply to the proposed Davis Refinery and the compliance demonstration methods proposed are included in the table below, and are further described in the text section that follows.

40 CFR 60 Subpart Ja Applicable Requirements

Source	Regulatory Citation	Emission/Work Practice Standard	Average Period	Compliance Demonstration
Fuel Gas Combustion Devices	40 CFR 60.102a(g)(1)	RSC: 20 ppmvd @ 0% 0_2 or H_2S: 162 ppmv[1]	3-hour rolling average basis	Operation of CEMS[1] per §60.107a(a) and methods/procedures per §60.104a(i)&(j)
		RSC: 8 ppmvd @ 0% 0_2 or H_2S: 60 ppmv[1]	365 successive calendar day rolling average basis	
	40 CFR 60.102a(g)(2)[2]	NOx[3]: 40 ppmvd @ 0% 0_2 or 0.040 lb/MMBtu HHV basis	30-day rolling average basis	Biennial performance testing and methods/procedures per §60.104a(i)(6)&(7)
		NOx[4]: 60 ppmvd @ 0% 0_2 or 0.060 lb/MMBtu HHV basis		
	40 CFR 60.103a(c)(2)	Root Cause Analysis / Corrective Action Analysis	N/A	40 CFR 60.103a(d)&(e)
Sulfur Recovery Unit	40 CFR 60.102a(f)(2)(i)	RSC: 2,500 ppmvd @ 0% 0_2	12-hr rolling average basis	Operation of RSC CEMS per §60.106a(a)(1) and methods/procedures per 60.104a(h)
	40 CFR 60.103a(c)(3)	Root Cause Analysis / Corrective Action Analysis	N/A	40 CFR 60.103a(d)&(e)
Flares	40 CFR 60.103a(h)	H_2S: 162 ppmv[5]	3-hour rolling average basis	Operation of CEMS[1] per §60.107a(e) and methods/procedures per §60.104a(j)
	40 CFR 60.103a(c)-(e)	Flow Monitoring	N/A	§60.107a(f)
	40 CFR: 60.103a(a)	Flare Monitoring Plan	N/A	40 CFR 60.103a(b)
	40 CFR 60.103a(c)(1)	Root Cause Analysis / Corrective Action Analysis	N/A	40 CFR 60.103a(d)&(e)

Source	Regulatory Citation	Emission/Work Practice Standard	Average Period	Compliance Demonstration
Fluid Catalytic Cracking Unit	40 CFR 60.102a(b)(1)	PM: 0.020 gr/dscf if a PM CEMS is used		Operation of PM CEMS per §60.105a(d)
		PM: 0.5 lb/1,000 lb coke burn-off @ 0% 0_2 if a CPMS and CO2 CEMS are used		Operation of CPMS and CO_2 CEMS per per §60.105a(b)(1)&(2)
	40 CFR 60.102a(b)(2)	NOx: 80 ppmvd @ 0% 0_2	7-day rolling average basis	Operation of NOx CEMS per §60.105a(f)
	40 CFR 60.102a(b)(3)	SO_2: 50 ppmvd @ 0% 0_2	7-day rolling average basis	Operation of NOx CEMS per §60.105a(f)
		SO_2: 25 ppmvd @ 0% 0_2	365-day rolling average basis	Operation of SO_2 CEMS per §60.105a(g)
	40 CFR 60.102a(b)(4)	CO: 500 ppmvd @ 0% 0_2	Hourly basis	Operation of CO CEMS per §60.105a(h)
	40 CFR 60.103a(c)	Root Cause Analysis / Corrective Action Analysis	*NIA*	40 CFR 60.103a(d)&(e)

1. Rule provides for different methods of CEMS, to be decided during detailed engineering.
2. Fuel Gas Combustion Devices greater than 40 MMBtu/hr
3. NOx limits for natural draft process heaters
4. NOx limits for forced draft process heaters
5. Process upset gases or fuel gas released to flare are exempt from this limit.

Fuel Gas Combustion Devices excluding Flares

For each fuel gas combustion device excluding flares, Meridian shall comply with all applicable limits established by 40 CFR 60.102a(g)(l). To this effect, Meridian will comply with either provision below.

a. Not discharge or cause the discharge of any gases into the atmosphere that contain $S0_2$ in excess of 20 ppmv (dry basis, corrected to zero percent excess air) determined on a 3-hour rolling average basis and $S0_2$ in excess of 8 ppmv (dry basis, corrected to zero percent excess air), determined on a 365-day successive calendar day rolling average basis; or

c. Not burn in any fuel gas combustion device any fuel gas that contains H_2S in excess of 162 ppmv determined hourly on a 3-hour rolling average basis and H_2S in excess of 60 ppmv determined daily on a 365 successive calendar day rolling average basis.

For each fuel gas combustion device excluding flares, with a capacity greater than 40 MMBtu/hr, Meridian shall comply with all applicable limits established by 40 CFR 60.102a(g)(l). To this effect, Meridian will comply with either provision below.

a. For natural draft process heaters:

- Not discharge to the atmosphere any emissions of NOx in excess of 40 ppmv (dry basis, corrected to zero percent excess air) determined daily on a 30-day rolling average basis
- Not discharge to the atmosphere any emissions of NOx in excess of 0.040 pounds per million British thermal units (lb/MMBtu) higher heating value basis determined daily on a 30-day rolling average basis.

b. For forced draft process heaters:

- Not discharge to the atmosphere any emissions of NOx in excess of 60 ppmv (dry basis, corrected to zero percent excess air) determined daily on a 30-day rolling average basis
- Not discharge to the atmosphere any emissions of NOx in excess of 0.060 pounds per million British thermal units (lb/MMBtu) higher heating value basis determined daily on a 30-day rolling average basis.

Meridian will comply with the following fuel fired heaters emission monitoring requirements of 40 CFR 60 Subpart Ja, including the applicable requirements of 40 CFR 60.107a(a) and (c):

a. Install, operate, calibrate and maintain an instrument for continuously monitoring and recording the concentration by volume (dry basis, zero percent excess air) of NOx emissions into the atmosphere. The monitor must include an 0_2 monitor for correcting the data for excess air. Monitoring of NOx emissions must also meet all applicable requirements of 40 CFR 60.107a(c)

b. For each fuel gas combustion device subject to an $S0_2$ or H_2S limit, Meridian will comply with either provision below.

- Install, operate, calibrate and maintain an instrument for continuously monitoring and recording the concentration (dry basis, zero percent excess air) of sulfur dioxide emissions into the atmosphere. The monitor must include an oxygen monitor for correcting the data for excess air. Monitoring of sulfur dioxide emissions must also meet all applicable requirements of 40 CFR 60 Subpart Ja, including the applicable requirements of 40 CFR 60.107a(a)(1).

- Install, operate, calibrate and maintain an instrument for continuously monitoring and recording the concentration by volume (dry basis) of hydrogen sulfide in the fuel gases before being burned in any fuel gas combustion device. Monitoring of hydrogen sulfide emissions must also meet all applicable requirements of 40 CFR 60 Subpart Ja, including the applicable requirements of 40 CFR 60.107a(a)(2).

Sulfur Recovery Unit

The SRU at the proposed Davis Refinery will be an affected facility and subject to Subpart Ja. The rated capacity of the SRU is approximately 10 long ton/day. For the purpose of applicability determination of the provisions of Subpart Ja, the SRU is considered to be a sulfur recovery plant with a capacity less than 20 long tons/day with a reduction control system followed by incineration. Therefore, Meridian shall comply with all applicable limits established by 40 CFR 60.102a(f)(2)(i) which require that the SRU not discharge or cause the discharge of any gases into the atmosphere in excess of 2,500 ppm by volume of reduced sulfur compounds calculated as ppm SO_2 by volume (dry basis) at zero percent excess air, determined on a 12-hour rolling average basis. In addition, Meridian will install, operate, calibrate, and maintain an instrument for continuously monitoring and recording the concentration (dry basis, zero percent excess air) of any SO_2 emissions into the atmosphere. The monitor will include an O_2 monitor for correcting the data for excess air.

Flare System

The proposed Davis Refinery Flare system will be designed and operated in accordance with the requirements of NDAC 33-15-12-02, and 40 CFR 60.18 (NSPS Subpart A).

a. The flares shall be operated with a flame present at all times when emissions may be vented to the flare. The presence of a flame will be monitored using a thermocouple or any other equivalent device approved by NDDH.

b. The flares shall be operated with no visible emissions except for periods not to exceed a total of five minutes during any two consecutive hours. Reference Method 22 of 40 CFR 60, Appendix A will be used to determine compliance with the visible emissions provision.

c. The flare system (enclosed flare 207-FL-0701, and emergency elevated flares 207-FL-0703 and 207-FL-0704) shall not bum any fuel gas that contains H_2S in excess of 162 ppmv determined hourly on a 3-hour rolling average basis. The combustion in a flare of process upset gases released to the flare as a result of relief valve leakage or other emergency malfunctions is exempt from this limit. Natural gas will be provided to the flare pilots to ensure H_2S limitations are met at any other time.

d. Emergency acid gas flare 207-FL0702 is being proposed to manage process upset gases or fuel gas that is released to the flare system as a result of relief valve leakage or other emergency malfunctions from the sour water unit and sulfur recovery unit. Since the intended operation of the sour gas flare meets the exemption requirements, it is exempt from the H_2S limit 162 ppmv determined hourly on a 3-hour rolling average basis. Natural gas will be provided to the flare pilots to ensure H_2S limitations are met at any other time.

For enclosed flare 207-FL-0701 and emergency acid flare 207-FL-0702 Meridian will comply with the emission monitoring requirements of 40 CFR 60 Subpart Ja, including the applicable requirements of 40 CFR 60.107a(e) and (f):

a. Install, operate, calibrate a continuous parameter monitoring system to measure and record the flow rate of gas discharged to the flare. Flare gas flow monitoring must

also meet all applicable requirements of 40 CFR 60 Subpart Ja, including the applicable requirements of 40 CFR 60.107a(f).

b. Install, operate, calibrate, and maintain an instrument for continuously monitoring and recording the concentration of H_2S in gas discharged flare according to the requirements of 40 CFR 60.107a(e)(2)(i) through (iii) and collect and analyze samples of the gas and calculate total sulfur concentrations as specified in 40 CFR 60.107a(e)(2)(iv) through (ix).

c. Install, operate, calibrate and maintain an instrument for continuously monitoring and recording the concentration of total reduced sulfur in gas discharged to the flare in 40 CFR 60.107a(e) for assessing the root cause analysis threshold for the flare.

In accordance with the emission monitoring requirements of 40 CFR 60 Subpart Ja flares 207-FL-0703 and 207-FL-0704 which are classified as secondary emergency flares are not required to be fitted with continuous flow monitors. Instead, Meridian will install, operate, calibrate and maintain, a CPMS to measure and record the pressure in the flare gas header between the knock-out pot and water seal and to measure and record the water seal liquid level in accordance with the emission monitoring provisions of 40 CFR 60.107a(g).

Meridian will develop and implement a written flare management plan upon startup of the proposed Davis Refinery listing all refinery process units, ancillary equipment, and fuel gas systems connected to each flare. The flare management plan will include a flare minimization assessment that at a minimum will consider the minimization alternatives in 40 CFR 60.103a(a)(2) and/or the procedures in 40 CFR 60.103a(a)(5) though (a)(7), with the exception of those that cannot reasonably be implemented by the start-up date, and which will be implement in accordance with a proposed schedule provided in the flare management plan. Additionally, the plan will include the information described in 40 CFR 60.103a(a)(l) through (a)(7).

In addition to work practice standards including a flare management plan and a root cause analysis and corrective action analysis for certain discharges, the flare system will be subject to an H_2S limit of 162 ppm (3-hr rolling avg. basis). The PTE calculation provided in this application are based on this standard.

Root Cause Analysis and Corrective Action Analysis

Each fuel gas combustion device, flare, and sulfur recovery plant shall conduct a root cause analysis and corrective action analysis for each of the conditions specified in 40 CFR 60.103a(c)(l) through (c)(3). The root cause analysis and corrective action analysis must be completed by the schedule provided in 40 CFR 60.103a(d) and shall implement the corrective actions in accordance with 40 CFR 60.103a(e).

The rated capacity of the SRU is approximately 10 long ton/day. For the purpose of applicability determination of the provisions of Subpart Ja, the SRU is considered to be a sulfur recovery plant with a capacity less than 20 long tons/day with a reduction control system followed by incineration. Therefore, Meridian shall comply with all applicable limits established by 40 CFR 60.102a(f)(2)(i) which require that the SRU not discharge or cause the discharge of any gases into the atmosphere in excess of 2,500 ppm by volume of reduced sulfur compounds calculated as ppm SO_2 by volume (dry basis) at zero percent excess air, determined on a 12-hour rolling average basis. In addition, Meridian will install, operate, calibrate, and maintain an instrument for continuously monitoring and recording the concentration (dry basis, zero percent excess air) of any SO_2 emissions into the atmosphere. The monitor will include an O_2 monitor for correcting the data for excess air.

Fluid Catalytic Cracking Unit

The FCCU at the proposed Davis Refinery will be an affected facility and subject to the emission limitations of Subpart Ja:

Citation	Summary of Requirement
§60.102a(b)(1)(ii)	Particulate Matter limit of 0.5 gram per kilogram (g/kg) of coke burn-off (0.5 lb PM/1,000 lb coke burn-off) or, if a PM CEMS is used, 0.020 gr/dscf corrected to 0 percent excess air .
§60.102a(b)(2)	Nitrogen oxides limit of 80 parts per million by volume (ppmv), dry basis corrected to 0 percent excess air, on a 7-day rolling average basis.
§60.102a(b)(3)	Sulfur dioxide limit of 50 ppmv dry basis corrected to 0

	percent excess air, on a 7-day rolling average basis and 25 ppmv, dry basis corrected to 0 percent excess air, on a 365-day rolling average basis.
§60.102a(b)(4)	Carbon monoxide limit of 500 ppmv, dry basis corrected to 0 percent excess air, on an hourly average basis.

For the FCCU Meridian shall comply with all applicable limits established by 40 CFR 60.102a(b)(1) through (4). To this effect, Meridian will comply with the monitoring provisions below:

a. For PM monitoring:

- Install, operate, calibrate, and maintain an instrument for continuously monitoring and recording the concentration (0 percent excess air) of PM in the exhaust gases prior to release to the atmosphere in accordance with the applicable requirements of 40 CFR 60.105a(d). The monitor must include an O_2 monitor for correcting the data for excess air.

Or,

- Install, operate and maintain continuous parameter monitor systems (CPMS) to measure and record operating parameters for each control device in accordance with the applicable requirements of 40 CFR 60.105a(b)(1), and
- Install, operate, calibrate, and maintain an instrument for continuously monitoring the concentrations of CO2, O2 (dry basis), for use in determining the coke burn-off rate of the FCCU in accordance with the provisions of 40 CFR 60.105a(b)(2)

b. For NOx monitoring, install, operate, calibrate, and maintain an instrument for continuously monitoring and recording the concentration by volume (dry basis, 0 percent excess air) of NOx emissions into the atmosphere in accordance with the applicable requirements of 40 CFR 60.105a(f). The monitor must include an O_2 monitor for correcting the data for excess air.

d. For SO2 monitoring, install, operate, calibrate, and maintain an instrument for continuously monitoring and recording the concentration by volume (dry basis, corrected to 0 percent excess air) of SO2 emissions into the atmosphere in accordance with the applicable requirements of 40 CFR 60.105a(g). The monitor shall include an O_2 monitor for correcting the data for excess air.

e. For CO monitoring, install, operate, calibrate, and maintain an instrument for continuously monitoring and recording the concentration by volume (dry basis, corrected to 0 percent excess air) of CO emissions into the atmosphere in accordance with the applicable requirements of 40 CFR 60.105a(h). The monitor shall include an O_2 monitor for correcting the data for excess air.

NSPS- Subpart Ja - Emissions Testing

The initial performance tests required by 40 CFR 60.8 for Subpart Ja limits will be conducted within 60 days after achieving the maximum production rate at which the affected facility will be operated, but no later than 180 days after start-up of each affected facility.

11.7.4 Standards of Performance for Volatile Organic Liquid Storage Vessels (Including Petroleum Liquid Storage Vessels) for Which Construction, Reconstruction or Modification Commenced After July 23, 1984 (40 CFR 60 Subpart Kb)

Meridian will have new storage vessels subject to Subpart Kb as follows:

"storage vessel either with a design capacity greater than or equal to 151 m 3 containing a [volatile organic liquid] VOL that, as stored, has a maximum true vapor pressure equal to or greater than 5.2 kPa but less than 76.6 kPa or with a design capacity greater than or equal to 75 m 3 but less than 151 m 3 containing a VOL that, as stored, has a maximum true vapor pressure equal to or greater than 27.6 kPa but less than 76.6 kPa. This subpart does not apply to storage vessels with a capacity greater than or equal to 151 m 3 storing a liquid with a maximum true vapor pressure less than 3.5 kilopascals (kPa) or with a capacity greater than or equal to 75 m^3 but less than 151 m^3 storing a liquid with a maximum true vapor pressure less than 15.0 kPa"

Only the storage tanks in crude oil service and light slops, are subject to the provisions of this subpart. Storage tanks in gasoline pool/naphtha service are subject to the provisions of 40 CFR 63 Subpart BBBBBB – Emission Standards for Hazardous Air Pollutants for Gasoline Distribution Bulk Terminals, Bulk Plants, and Pipeline Facilities. Other storage vessels will either have a capacity less than the applicability threshold or will serve a material that has a maximum true vapor pressure (TVP) less than the applicability threshold are therefore not subject to the requirements of this subpart. Regardless of the applicability of 40 CFR Subpart Kb to the storage tanks of the proposed Davis Refinery, tank emissions from crude oil, gasoline pool, jet fuel, diesel and slop tanks will be well controlled in order to ensure the proposed synthetic minor emission limits for VOCs and VHAPs are met.

To demonstrate compliance with 40 CFR 60 Subpart Kb, Meridian has elected to comply, although not subject to the standard, with the more stringent design, operating, inspection, record keeping and reporting requirements of IFR tanks in accordance with 40 CFR 63 Subpart WW – National Emission Standards for Storage Vessels – Control Level 2. The IFR tanks, not in gasoline pool service, at the proposed Davis Refinery include: crude oil tanks, and jet fuel tanks. IFR tanks will be fitted with double seal and wiper design, with both primary and secondary seals being liquid-mounted, deck fittings will be gasketed, and access hatches will be designed to be bolted or fastened when closed.

Similarly, Meridian has elected to connect fixed roof tanks storing diesel and light and heavy slops, to a closed vent system and control device to emissions of total organic TOCs or HAPs by 95 weight-percent in accordance with §60.112b(3), even though diesel tanks and heavy slops are not subject to the provisions of Subpart Kb. Vacuum Gas Oil, Diluent (heavy FCC product) and Fuel Oil tanks will be the only fixed roof tanks with atmospheric vents at the proposed Davis Refinery. For fixed roof tanks, Meridian will comply with the inspection procedures of §60.113b, reporting and recordkeeping requirements of §60.115b and monitoring requirements of §60.116.

11.7.5 Standards of Performance for VOC Emissions from Petroleum Refinery Wastewater Systems (40 CFR 60 Subpart QQQ)

The proposed Davis Refinery is subject to the provisions of Subpart QQQ. Affected facilities include individual drain systems (40 CFR 60.692-2) and oil-water separators (40 CFR 60.692-3). Meridian will design a wastewater system that will meet the standards and include the necessary control methods specified in this subpart to demonstrate compliance with the proposed synthetic minor source limits for VOCs and HAPs. A summary of the key Subpart QQQ provisions which Meridian will comply with are provided below:

Citation	Summary
§60.692-2(a)	All process drains shall be equipped with water seal controls, inspected monthly for low water levels
§60.692-2(b)	All junction boxes shall be equipped with a tight seal cover and an open vent pipe and shall be inspected semi- annually to assure cover is in place and seal is tight.
§60.692-2(c)	Unburied sewer lines shall be enclosed to not have any visual gaps or cracks, and should be inspected semi-annually.
§60.692-3(a-b)	Oil-water separators shall be installed with a fixed roof that completely covers the separator tank, is equipped and operated with a closed vent system and control device, and shall by inspected semi-annually.
§60.692-5(b-e)	Vapor recovery system shall be designed and operated to recover the VOC emissions with an efficiency of 95 percent or greater.

11.7.6 Standards of Performance for Stationary Compression Ignition Internal Combustion Engines (40 CFR 60 Subpart IIII)

The emergency generator and backup firewater pumps will be new diesel-fired emergency compression ignition internal combustion engine constructed after the applicable trigger dates established in NSPS Subpart IIII, and therefore are subject to the provisions of this

subpart. Meridian will comply with NSPS Subpart IIII by purchasing compression ignition internal combustion engines which comply with the applicable emission standards for of NSPS Subpart IIII for the intended service.

11.8 RESTRICTION OF HAZARDOUS AIR POLLUTANTS EMISSIONS (CHAPTER 33-15-13)

As discussed in Section 10.3.3, the proposed Davis Refinery will be subject to NESHAPs adopted by the State of North Dakota. This section details compliance demonstration for NESHAPs that are applicable to the proposed Davis Refinery.

11.8.1 National Emissions Standards for Equipment Leaks (Fugitive Emission Sources) of Benzene (40 CFR 61 Subpart J)

This subpart establishes standards that limit fugitive emissions and include requirements for the monitoring of emissions from vent streams associated with the operation of the process units which could be potential sources of fugitive emissions of Benzene. The process units within the proposed Davis Refinery subject to this subpart include those associated with the generation of light naphtha and gasoline range compounds. Meridian will demonstrate compliance with this subpart by compliance with Subpart V – National Emissions Standards for Equipment Leaks (Fugitive Emission Sources)

11.8.2 National Emissions Standards for Equipment Leaks (Fugitive Emission Sources) (40 CFR 61 Subpart V)

The provisions of this subpart apply to each of the following sources that are intended to operate in volatile hazardous air pollutant ***("VHAP")*** service: pumps, compressors, pressure relief devices, sampling connection systems, open-ended valves or lines, valves, connectors, surge control vessels, bottoms receivers, and control devices or systems required by this subpart. Meridian will demonstrate compliance with this subpart via implementation of pumps in VOC service with double mechanical seals, as well as by connection of pressure relief devices, sampling connecting systems, surge control vessels and bottoms receivers to closed-vent systems routed to fuel gas or flare in accordance with this subpart, and implementation of an automated LDAR as described in Section 11.7.2 above.

11.8.3 National Emissions Standards for Benzene Waste Operations (40 CFR 61 Subpart FF)

The proposed oily water treatment system and individual drain lines that convey process waste water to the oily water treatment system are subject to these requirements. Process wastewater means water which comes in contact with benzene during manufacturing or processing operations conducted within a process unit. Process wastewater is not organic wastes, process fluids, product tank drawdown, cooling tower blowdown, steam trap condensate, or landfill leachate. Waste that is contained in a segregated stormwater sewer system and any gaseous stream from a waste management unit, treatment process, or wastewater treatment system routed to a fuel gas system, are exempt from compliance with the provisions of this subpart.

Meridian will demonstrate compliance with this subpart via segregation of stormwater systems from process wastewater streams, individual closed-drain systems to convey process wastewater from the process units to the oily water treatment system, and covered oily water tanks and separators in compliance with the most stringent requirements of NSPS Subpart QQQ, and those of this subpart to order to ensure the proposed synthetic minor emission limits for VOCs and VHAPs are met by the proposed Davis Refinery.

A summary of the key Subpart FF definitions is provided below:

Closed-vent system means a system that is not open to the atmosphere and is composed of piping, ductwork, connections, and, if necessary, flow inducing devices that transport gas or vapor from an emission source to a control device.

Control device means an enclosed combustion device, vapor recovery system, or flare.

Cover means a device or system which is placed on or over a waste placed in a waste management unit so that the entire waste surface area is enclosed and sealed to minimize air emissions. A cover may have openings necessary for operation, inspection, and maintenance of the waste management unit

Fuel gas system means the offsite and onsite piping and control system that gathers gaseous streams generated by facility operations, may blend them with sources of gas, if available, and transports the blended gaseous fuel at suitable pressures for use as fuel in

heaters, furnaces, boilers, incinerators, gas turbines, and other combustion devices located within or outside the facility. The fuel is piped directly to each individual combustion device, and the system typically operates at pressures over atmospheric.

Oil-water separator means a waste management unit, generally a tank or surface impoundment, used to separate oil from water. An oil-water separator consists of not only the separation unit but also the forebay and other separator basins, skimmers, weirs, grit chambers, sludge hoppers, and bar screens that are located directly after the individual drain system and prior to additional treatment units such as an air flotation unit, clarifier, or biological treatment unit. Examples of an oil-water separator include an API separator, parallel-plate interceptor, and corrugated-plate interceptor with the associated ancillary equipment.

No detectable emissions means less than 500 parts per million by volume (ppmv) above background levels, as measured by a detection instrument reading in accordance with the procedures specified in § 61.355(h) of this subpart.

Segregated stormwater sewer system means a drain and collection system designed and operated for the sole purpose of collecting rainfall runoff at a facility, and which is segregated from all other individual drain systems.

A summary of the key Subpart FF provisions which Meridian will comply with are provided below:

Citation	Summary
§61.342(c)(1)	For each waste stream that contains benzene, remove or destroy the benzene contained in the waste using a treatment process or wastewater treatment system that complies with the standards of this subpart.
§61.342(d)(2)	Process wastewater shall be treated to achieve a total annual benzene quantity from facility process wastewater less than 1 Mg/yr (1.1 ton/yr).
§ 61.343(a)(1)	For each tank in which the waste stream is placed install, operate, and maintain a fixed-roof and closed-vent system

	that routes all organic vapors vented from the tank to a control device.
§ 61.346	For individual drain systems install, operate, and maintain on each drain system opening a cover and closed-vent system that routes all organic vapors vented from the drain system to a control device.
§ 61.347	For each oil-water separator install, operate, and maintain a fixed-roof and closed-vent system that routes all organic vapors vented from the tank to a control device.
§ 61.348	The treatment process must either remove benzene from the waste stream to less than 10 ppmw, or has a 99% mass basis benzene removal efficiency, or a destroys benzene in the waste stream by incinerating the waste in a combustion unit with a 99% efficiency.
§ 61.349(a)(1)	For each closed-vent system and control device install, operate, and maintain a closed-vent system designed to operate with no detectable emissions.
§ 61.349(a)(2)	For each closed-vent system and control device install, operate, and maintain a control device in the form of either: an enclosed combustion device or a vapor recovery system designed to destroy, recover or control VOCs with an efficiency of 95 weight percent or greater, or a flare system designed in accordance with the provisions of 40 CFR 60.18.
§ 61.349(b)	Each closed-vent system and control device shall be operated at all times when waste is placed in the waste management unit vented to the control device.

11.9 PERMITTING REQUIREMENTS (CHAPTER 33-15-14)

This chapter requires the facility to obtain a Permit to Construct and a Permit to Operate. In accordance with the allowable provisions of 33-15-14, and based on the PTE of regulated NSR pollutants from the proposed Davis Refinery, under its physical and operational design and including the effect of add-on air pollution control equipment, Meridian is pursuing a Permit to Construct for the proposed Davis Refinery which includes proposed synthetic minor emission limits for regulated air contaminants.

Once the permit to construct is granted, and in accordance with the provisions of 33-15-14-03, Meridian must apply for a permit to operate the proposed Davis Refinery at least thirty days prior to the start-up of routine operations. In order to satisfy this requirement, Meridian need only submit a thirty-day prior notice of proposed startup and satisfy compliance requirements for a Minor Source Permit to Operate.

11.10 RESTRICTION OF ODOROUS AIR CONTAMINANT EMISSIONS (CHAPTER 33-15-16)

The Davis Refinery is subject to the provisions of chapter 33-15-07 for controls of organic compound and H_2S emissions. The proposed Davis Refinery will demonstrate compliance with this chapter through compliance with the NSPS and NESHAPs applicable to the Davis Refinery which require the emission units to be well controlled to meet the proposed synthetic minor emission limits for regulated air contaminants contained in this permit application.

11.11 RESTRICTION OF FUGITIVE EMISSIONS (CHAPTER 33-15-17)

The proposed Davis Refinery is a designated source of air pollution, and as such, quantifiable fugitive emissions are accounted for in the refinery-wide PTE estimation. In order to ensure the proposed synthetic minor emission limits for CO, SO2, NOx, VOCs and HAPs are met fugitive emissions must be controlled. Meridian will comply with this regulation via compliance with NSPS Subparts GGGa and VVa, NESHAP Subparts J and V, and MACT Standards Subpart BBBBBB, to prevent/limit the release of fugitive gaseous and particulate matter emissions from the refining processes, and by taking

reasonable precautions for abating and preventing fugitive particulate emissions from roads within the facilities via speed controls and pavement in heavy traffic areas.

11.12 RESTRICTION OF HAZARDOUS AIR POLLUTANTS EMISSIONS FROM SOURCE CATEGORIES (CHAPTER 33-15-22)

As discussed in Section 10.3.4, the proposed Davis Refinery is a designated source of air pollution subject to MACT Standards applicable to Area Sources. This section details compliance demonstration for MACT Standards that are applicable to the proposed Davis Refinery. Meridian will comply with the applicable portions of the general provisions of the MACT Standards (Subpart A), as directed by each subpart applicable to the proposed Davis Refinery.

11.12.1 Emission Standards for Hazardous Air Pollutants for Gasoline Distribution Bulk Terminals, Bulk Plants, and Pipeline Facilities (40 CFR 63 Subpart BBBBBB)

The proposed Davis Refinery includes a gasoline bulk terminal which is subject to the provisions of Subpart BBBBBB. This subpart establishes gasoline handling facilities emission limitations, management practices, monitoring, reporting and recordkeeping requirements. Meridian will demonstrate compliance with the provisions of this subpart by operating and maintaining at all times, the loading facilities, including associated air pollution control equipment and monitoring equipment, in a manner consistent with safety and good air pollution control practices for minimizing emissions.

In particular, Meridian will design, install and operate:

- Gasoline pool storage tanks (i.e. naphtha, reformate, gasoline, alkylate) compliant with 40 CFR 63.1063 standard that Meridian has elected to comply with, although not subject to it, in order to ensure proposed synthetic minor source levels of VOCs can be met. The gasoline pool storage tanks will be IFR tanks fitted with double seal and wiper design, with both primary and secondary seals being liquid-mounted, deck fittings will be gasketed, and access hatches will be designed to be bolted or fastened when closed.
- Tank truck and railcar gasoline loading facilities compliant with 40 CFR 63.11085. The loading racks will be designed for submerged filling and with a vapor collection

system to ensure TOC emissions during gasoline loading operations do not exceed 80 mg/l of gasoline loaded.

Citation	Summary
§63.11088(a)	Loading rack with a vapor collection system designed to collect the TOC vapors displaced from cargo tanks during product loading and prevent them from passing to another loading rack and to the atmosphere. Reduce emissions of TOC to less than or equal to 80 mg/l of gasoline loaded into gasoline cargo tanks at the loading rack. Limit the loading of gasoline into gasoline cargo tanks that are vapor tight
§63.11089	Perform a monthly leak inspection of all equipment in gasoline service.

11.13 SHUTDOWN/MALFUNCTION AND/OR DEVIATION FROM PERMIT REQUIREMENTS (NDAC 33-15-01-13.2 & 3)

To comply with the notification requirements of NDAC 33-15-01-13.2 for maintenance shutdowns of air pollution control equipment Meridian will give NDDH at least 24-hour notice of its intent to shut down such equipment in cases in which the air contaminating source will continue operating while the control equipment is not in service. Such prior notice will identify the specific facility to be taken out of service, the expected length of time of air pollution control equipment shutdown, nature and estimated quantity of emissions of air pollutants likely to be emitted, measures to minimize the length of the shutdown, and the reasons that it would be impossible or impractical to shut down the source operation during the maintenance period. This notification does not exempt Meridian from compliance with emissions allowable under the permit.

To comply with the notification requirements of NDAC 33-15-01-13.2 for malfunctions requirements that can be expected to last longer than 24 hours and cause the emission of air contaminants in violation of permit requirements or any other applicable rules and regulations, Meridian will notify the Department as soon as possible during normal working hours. The notification must contain a statement giving all pertinent facts,

including the estimated duration of the breakdown, if applicable. NDDH Air Quality Division shall be notified when the condition causing the malfunction has been corrected. Furthermore, when excess emissions result from an unavoidable malfunction, a written report providing sufficient information to demonstrate that an unavoidable equipment malfunction occurred, will be submitted to NDDH within 30 days of the calendar quarter in which the malfunction occurred or within thirty days of a written request by the NDDH, whichever is sooner.

When a failure of a CEMS occurs, an alternative method for measuring or estimating emissions is required. The facility will, as soon as practicable, resolve the failure of a CEMS, and conduct timely repairs. To comply with the requirements of NDAC 33-15-01-13.3, Meridian will rely upon an arithmetical average of the available historic data at similar load levels to substitute data for the period of CEMS data unavailability.

11.14 RECORDKEEPING (NDAC 33-15-14)

All records required by the PTC object of this permit application, including specific requirements of NSPS, NESHAP and MACT standards applicable to the proposed Davis Refinery, will be kept on file for a minimum period of five years. The records will be available for inspection by NDDH upon request. The following records will be maintained:

- Performance test records and supporting information
- Monitoring data and supporting information as required by the permit and applicable regulations. Supporting information includes calibration and maintenance records and original data recordings for continuous monitoring systems.
- Results of all visible emissions observations and any corrective actions taken.
- Stack test results if required including field data, laboratory analysis data, and quality assurance data.
- Records of the occurrence and duration of any startup, shutdown, or malfunction in the operation of the regulated facilities; any malfunction of the air pollution control equipment; or any periods during which a continuous monitoring system or monitoring device is inoperative.
- Reports as required by the Permit to Construct or by the Permit to Operate.

11.15 REPORTING (NDAC 33-15-14)

Upon start of operations of the proposed Davis Refinery annual emission inventory reports will be submitted to the NDDH, following NDDH guidelines and approved formats, to comply with the various reporting requirements applicable under NSPS. These reports will include, but not be limited to, process information regarding the hours of operation and the amount and type of air contaminants emitted during the monitoring period, including excess emissions and monitoring systems performance report. Annual reporting will be submitted on January 30th of each year, covering the preceding 12-month reporting period. In addition, semi-annual reports will be submitted for reporting of continuous monitoring data in accordance with 40 CFR 60.7(c). Semi-annual reporting will be included with the annual report for the preceding 6-month reporting period from July through December, and on as a separate report on July 30 for the preceding 6-month reporting period from January through June.

11.16 FEES (NDAC 33-15-23)

Meridian will pay fees of $325 in accordance with NDAC 33-15-23. A check for the $325 filing fee is included with this application.

12 DISPERSION MODELING REQUIREMENTS FOR CRITERIA POLLUTANTS AND AIR TOXICS

12.1 SUMMARY OF CRITERIA POLLUTANT MODELING ANALYSIS

A statement addressing any dispersion modeling requirements for Criteria Pollutants or Air Toxics and the inclusion of any required modeling analysis with a complete method description in accordance with the State Air Quality Analysis Guide or Department guidance.

Modeling is often required for major sources dependent on the amount and types of pollutants emitted by the source. Some source types may be exempt from modeling if they meet the criteria for exemption. Based on the level of emissions that Meridian will emit, modeling typically would not be required to be conducted since the facility qualifies as a synthetic minor source under NDDoH regulations. However due to the high level of public interest in this project as well as due to the proximity of the site to the Theodore Roosevelt National Park which is a federal Class I airshed, the NDDoH has indicated that modeling is required to determine compliance with NDDoH and federal National Ambient Air Quality Standards (NAAQS).

Below are a few of the modeling policies that apply to construction permits:

- Air Dispersion Modeling Emergency Engines/Flares
- Criteria Pollutant Modeling Requirements for a Permit to Construct
- Dispersion Modeling Requirements for Compressor Engines and Glycol Dehydration Units
- Policy for the Control of Hazardous Air Pollutant Emissions in ND (Air Toxic Policy)

The main purpose of the air quality analysis is to demonstrate that new emissions emitted from a proposed stationary source or major modification, in conjunction with other applicable emissions increases and decreases from existing sources, will not cause or contribute to a violation of any applicable NAAQS or PSD increment.

Generally, the analysis will involve (1) an assessment of existing air quality, which may include ambient monitoring data and air quality dispersion modeling results, and (2)

predictions, using dispersion modeling, of ambient concentrations that will result from the applicant's proposed project and future growth associated with the project related to impacts to Class I and Class II areas as well as for compliance with PSD and NAAQS standards.

Class I areas are areas of special national or regional natural, scenic, recreational, or historic value for which the PSD regulations provide special protection. One way in which air quality degradation is limited in all Class I areas is by stringent limits defined by the Class I increments for sulfur dioxides, particulate matter and nitrogen dioxide. In addition, the Federal Land Manager (FLM) of each Class I area is charged with the affirmative responsibility to protect that area's unique attributes, expressed generically as air quality related values (AQRV's)/ Class II areas are essentially all other areas accessible to the public that are not formally defined as Class I areas.

As previously noted, based on its location near a Class I area, as well as the general level of public interest, the NDDoH required at least screen modeling analysis for both Class I and Class II National Ambient Air Quality Standards (NAAQS) Significant Impact Levels (SILs). Class I and Class II SIL modeling was conducted using the US EPA AERMOD model with results compared to SIL levels noted above. The modeling included analysis and results for both the Base Operating Scenario (full project build-out) as well as for the Alternative Operating Scenario (Phase I build-out only). The modeling results for both the Base and Alternative Operating Scenarios showed that all impacts were below Class I and Class II SILs. Therefore, under NDDoH and EPA guidelines, further dispersion modeling will not be required. The detailed modeling analysis and discussion are included in Exhibit D, the Modeling Analysis Report which is submitted under separate cover.

12.2 SUMMARY OF TOXICS ANALYSIS

The NDDoH Policy for the Control of Hazardous Air Pollutant Emissions in North Dakota (Air Toxics Policy) was used to estimate maximum off-property, ground- level ambient concentrations for HAPs normalized to 1 g/s. The normalized maximum concentrations were multiplied by the g/s emission rate of each HAP from each non-emergency point source.

Per the NDDoH Air Toxics Policy, a Tier III analysis is not specifically required unless results show impacts above MAAL or MICR results. However, since modeling for compliance with Significant Impact Levels for Class I and Class II areas was undertaken by Meridian, we completed a Tier III analysis, for combined HAPs and utilized the weighted concentration of the HAP emissions to compare to MICR and MAAL results. Results of the maximum off-property, ground-level ambient concentration of any air pollutant shows a MICR or hazard index below the maximum threshold values of 1.0 E-05 and 1.0, respectively. Detailed results of this analysis and related discussion is included in the Modeling Analysis Report for Meridian which is submitted under separate cover.

Exhibit A: Application Forms

PERMIT APPLICATION FOR AIR CONTAMINANT SOURCES

NORTH DAKOTA DEPARTMENT OF HEALTH
DIVISION OF AIR QUALITY
SFN 8516 (06-13)

SECTION A – FACILITY INFORMATION

Name of Firm or Organization ***Meridian Energy Group – Davis Refinery***		
Contact Person for Air Pollution Matters ***Tom Johnson***		
Title ***Vice President of Operations***	Telephone Number ***(409)795-0792***	E-mail Address ***tjohnson@meridianenergygroup.inc***
Applicant´s Name ***Tom Williams***		
Title ***VP of Planning & Permitting***	Telephone Number ***(707) 299-0182***	E-mail Address ***twilliams@meridianenergygroup.inc***
Mailing Address (Street & No.) ***2062 Business Center Drive, Suite 115***		
City ***Irvine***	State ***CA***	ZIP Code ***92612***
Facility Address (Street & No.) ***37th Street***		
City ***Belfield***	State ***ND***	ZIP Code ***58622***

Country ***USA***	Latitude (Nearest Second) ***46°52'45"N***	Longitude (Nearest Second) ***103°14'55"W***

Legal Description of Facility Site ***Property ID 07 0000 00165 000 in the SE 1/4 of Section 2, Twp 139N, Range 100W and Property ID: 07 0000 00162 000 in the NW1/4 and SW 1/4 of Section 1, Twp 139N, Range 100W***	Land Area at Facility Site ***261 Acres***	MSL Elevation at Facility ***2,685 feet***

SECTION B – GENERAL NATURE OF BUSINESS

Describe Nature of Business	North American Industry Classification System Number	Standard Industrial Classification Number (SIC)
Petroleum Refining	***324110***	***2911***
Petroleum Bulk Stations & Terminals	***42710***	***5171***

SECTION C – GENERAL PERMIT INFORMATION

Type of Permit?	Permit to Construct (PTC) ☒	Permit to Operate ☐
If application is for a Permit to Construct, please provide the following data:		
Planned Start Construction Date ***April 2016***	Planned End Construction Date ***December 2016 (Phase 1)***	

SECTION D – SOURCE IDENTIFICATION AND CATEGORY OF EACH SOURCE INCLUDED ON THIS PERMIT APPLICATION

		Permit to Construct				Minor Source Permit to Operate						
Your Source ID Number	Source or Unit (Equipment, Machines, Devices, Boilers, Processes, Incinerators, Etc.)	New Source	Existing Source Modification	Existing Source Expansion	Existing Source Change of Location	New Source	Existing Source Initial Application	Existing Source After Modification	Existing Source After Expansion	Existing Source After Change of Location	Existing Source After Change of Ownership	Other
101-H-0101	***Atmospheric Distillation Unit #1 heater***	☒	☐	☐	☐	☐	☐	☐	☐	☐	☐	☐
102-H-0201	***Atmospheric Distillation Unit #2 heater***	☒	☐	☐	☐	☐	☐	☐	☐	☐	☐	☐
103-H-0301	***Vacuum Distillation Unit heater #1***	☒	☐	☐	☐	☐	☐	☐	☐	☐	☐	☐
103-H-0302	***Vacuum Distillation Unit heater #2***	☒	☐	☐	☐	☐	☐	☐	☐	☐	☐	☐
105-H-0501	***Heavy Naphtha Hydrotreater heater #1***	☒	☐	☐	☐	☐	☐	☐	☐	☐	☐	☐
105-H-0502	***Heavy Naphtha Hydrotreater heater #2***	☒	☐	☐	☐	☐	☐	☐	☐	☐	☐	☐
106-H-0601	***Catalytic Reformer Unit #2 heater***	☒	☐	☐	☐	☐	☐	☐	☐	☐	☐	☐
107-H-0701	***Catalytic Reformer Unit #1 heater***	☒	☐	☐	☐	☐	☐	☐	☐	☐	☐	☐
110-H-1001	***Diesel Hydrotreater heater***	☒	☐	☐	☐	☐	☐	☐	☐	☐	☐	☐

		Permit to Construct				Minor Source Permit to Operate						
Your Source ID Number	Source or Unit (Equipment, Machines, Devices, Boilers, Processes, Incinerators, Etc.)	New Source	Existing Source Modification	Existing Source Expansion	Existing Source Change of Location	New Source	Existing Source Initial Application	Existing Source After Modification	Existing Source After Expansion	Existing Source After Change of Location	Existing Source After Change of Ownership	Other
111-H-1101	***Light Naphtha Hydrotreater heater***	☒	☐	☐	☐	☐	☐	☐	☐	☐	☐	☐
112-VS-1201	***Regenerator vent stack***	☒	☐	☐	☐	☐	☐	☐	☐	☐	☐	☐
112-H-1201	***Fluid Catalytic Cracking Unit (FCCU) heater***	☒	☐	☐	☐	☐	☐	☐	☐	☐	☐	☐
114-H-1401	***FCC Naphtha Hydrotreater heater***	☒	☐	☐	☐	☐	☐	☐	☐	☐	☐	☐
117-H-1701	***Isomerization heater #1***	☒	☐	☐	☐	☐	☐	☐	☐	☐	☐	☐
117-H-1702	***Isomerization heater #2***	☒	☐	☐	☐	☐	☐	☐	☒	☐	☐	☐
118-H-1801	***Alkylation heater***	☒	☐	☐	☐	☐	☐	☐	☐	☐	☐	☐
122-H-2201	***Thermal Oxidizer***	☒	☐	☐	☐	☐	☐	☐	☐	☐	☐	☐
125-H-2501	***Kerosene Hydrotreater heater***	☒	☐	☐	☐	☐	☐	☐	☐	☐	☐	☐
202-PK-0201A	***Utility Boiler 1***	☒	☐	☐	☐	☐	☐	☐	☐	☐	☐	☐
202-PK-0201B	***Utility Boiler 2***	☒	☐	☐	☐	☐	☐	☐	☐	☐	☐	☐
202-PK-0201C	***Utility Boiler 3***	☒	☐	☐	☐	☐	☐	☐	☐	☐	☐	☐

		Permit to Construct				Minor Source Permit to Operate						
Your Source ID Number	Source or Unit (Equipment, Machines, Devices, Boilers, Processes, Incinerators, Etc.)	New Source	Existing Source Modification	Existing Source Expansion	Existing Source Change of Location	New Source	Existing Source Initial Application	Existing Source After Modification	Existing Source After Expansion	Existing Source After Change of Location	Existing Source After Change of Ownership	Other
203-T-0001	***Crude oil tank #1***	☒	☐	☐	☐	☐	☐	☐	☐	☐	☐	☐
203-T-0002	***Crude oil tank #2***	☒	☐	☐	☐	☐	☐	☐	☐	☐	☐	☐
203-T-0003	***Crude oil tank #3***	☒	☐	☐	☐	☐	☐	☐	☐	☐	☐	☐
203-T-0005	***Desulfurized Heavy Naphtha tank #1***	☒	☐	☐	☐	☐	☐	☐	☐	☐	☐	☐
203-T-0006	***Reformate tank #1***	☒	☐	☐	☐	☐	☐	☐	☐	☐	☐	☐
203-T-0007	***Reformate tank #2***	☒	☐	☐	☐	☐	☐	☐	☐	☐	☐	☐
203-T-0008	***Gasoline tank #1***	☒	☐	☐	☐	☐	☐	☐	☐	☐	☐	☐
203-T-0009	***Gasoline tank #2***	☒	☐	☐	☐	☐	☐	☐	☐	☐	☐	☐
203-T-0010	***Mid Gasoline tank #1***	☒	☐	☐	☐	☐	☐	☐	☐	☐	☐	☐
203-T-0011	***Jet Fuel tank #1***	☒	☐	☐	☐	☐	☐	☐	☐	☐	☐	☐
203-T-0012	***Jet Fuel tank #2***	☒	☐	☐	☐	☐	☐	☐	☐	☐	☐	☐
203-T-0013	***Undesulphurized Diesel tank #1***	☒	☐	☐	☐	☐	☐	☐	☐	☐	☐	☐
203-T-0014	***Undesulphurized Diesel tank #2***	☒	☐	☐	☐	☐	☐	☐	☐	☐	☐	☐
203-T-0015	***Desulphurized Diesel tank #1***	☒	☐	☐	☐	☐	☐	☐	☐	☐	☐	☐
203-T-0016	***Desulphurized Diesel tank #2***	☒	☐	☐	☐	☐	☐	☐	☐	☐	☐	☐

		Permit to Construct				Minor Source Permit to Operate						
Your Source ID Number	Source or Unit (Equipment, Machines, Devices, Boilers, Processes, Incinerators, Etc.)	New Source	Existing Source Modification	Existing Source Expansion	Existing Source Change of Location	New Source	Existing Source Initial Application	Existing Source After Modification	Existing Source After Expansion	Existing Source After Change of Location	Existing Source After Change of Ownership	Other
203-T-0017	***UVGO tank***	☒	☐	☐	☐	☐	☐	☐	☐	☐	☐	☐
203-T-0018	***FCC Naphtha tank #1***	☒	☐	☐	☐	☐	☐	☐	☐	☐	☐	☐
203-T-0019	***FCC Naphtha tank #2***	☒	☐	☐	☐	☐	☐	☐	☐	☐	☐	☐
203-T-0020	***Alkylate tank #1***	☒	☐	☐	☐	☐	☐	☐	☐	☐	☐	☐
203-T-0021	***Alkylate tank #2***	☒	☐	☐	☐	☐	☐	☐	☐	☐	☐	☐
203-T-0022	***Diluent tank***	☒	☐	☐	☐	☐	☐	☐	☐	☐	☐	☐
203-T-0023	***Fuel Oil tank #1***	☒	☐	☐	☐	☐	☐	☐	☐	☐	☐	☐
203-T-0024	***Fuel Oil tank #2***	☒	☐	☐	☐	☐	☐	☐	☐	☐	☐	☐
203-T-0031	***Light Naphtha tank #1***	☒	☐	☐	☐	☐	☐	☐	☐	☐	☐	☐
203-T-0032	***Light Naphtha tank #2***	☒	☐	☐	☐	☐	☐	☐	☐	☐	☐	☐
203-T-0033	***Light Slops tank***	☒	☐	☐	☐	☐	☐	☐	☐	☐	☐	☐
203-T-0034	***Heavy Slops tank***	☒	☐	☐	☐	☐	☐	☐	☐	☐	☐	☐
206WWT (Fugitive)	***Wastewater treatment plant***	☒	☐	☐	☐	☐	☐	☐	☐	☐	☐	☐
207-FL-1701	***Enclosed HC Operating Flare***	☒	☐	☐	☐	☐	☐	☐	☐	☐	☐	☐
207-FL-1702	***Acid Flare***	☒	☐	☐	☐	☐	☐	☐	☐	☐	☐	☐

		Permit to Construct				Minor Source Permit to Operate						
Your Source ID Number	Source or Unit (Equipment, Machines, Devices, Boilers, Processes, Incinerators, Etc.)	New Source	Existing Source Modification	Existing Source Expansion	Existing Source Change of Location	New Source	Existing Source Initial Application	Existing Source After Modification	Existing Source After Expansion	Existing Source After Change of Location	Existing Source After Change of Ownership	Other
207-FL-1703	***HC Emergency Flare #1***	☒	☐	☐	☐	☐	☐	☐	☐	☐	☐	☐
207-FL-1704	***HC Emergency Flare #2***	☒	☐	☐	☐	☐	☐	☐	☐	☐	☐	☐
208TL	***Truck Loading-Unloading System***	☒	☐	☐	☐	☐	☐	☐	☐	☐	☐	☐
209RL	***Rail Loading-Unloading System***	☒	☐	☐	☐	☐	☐	☐	☐	☐	☐	☐
212-P-1201 A/B/C	***Firewater Diesel Pump***	☒	☐	☐	☐	☐	☐	☐	☐	☐	☐	☐
215-CT-1501A	***Cooling Tower A***	☒	☐	☐	☐	☐	☐	☐	☐	☐	☐	☐
215-CT-1501B	***Cooling Tower B***	☒	☐	☐	☐	☐	☐	☐	☐	☐	☐	☐
215-CT-1501C	***Cooling Tower C***	☒	☐	☐	☐	☐	☐	☐	☐	☐	☐	☐
216-EG-1601 A/B/C	***Diesel/Natural gas-fired emergency generator set***	☒	☐	☐	☐	☐	☐	☐	☐	☐	☐	☐
FUG-1	***Process equipment leaks in VOC and Natural Gas service***	☒	☐	☐	☐	☐	☐	☐	☐	☐	☐	☐

SECTION E-IDENTIFICATION OF AIR CONTAMINANTS

Check all which are emitted in measurable quantities into the atmosphere from any operation at facility			
☐Arsenic	☒Chlorine Compounds	☒Sulfur Compounds	☐Radioisotopes
☐Asbestos	☐Chromium Compounds	☒Hydrogen Sulfide	☒Visible Emissions
☐Beryllium	☐Fluoride Compounds	☒Odors	☒Particulates (specify)
☐Cadmium	☒Volatile Organic Compounds	☒Carbon Monoxide	☒Dust
☒Lead	☒Other Organic Compounds	☒Nitrogen Compounds	☐Silica
☒Mercury	☒Greenhouse Gases (CO_2e)	☐Pesticides	☒Other (specify)

Hazardous Air Pollutants (HAPs): Acetaldehyde, Acetone, Acrolein, Benzene, Biphenyl, Bromomethane, 1,3-Butadiene, Cumene, Dichlorobenzene, Ethylbenzene, Formaldehyde, Hexane, Methylene chloride, Methyl tertiary-butyl ether, Phenol, Styrene, Toluene, Trichlorofluoromethane, 2,2,4- Trimethylpentane, Xylene, Naphthalene, PAHs, Carbon disulfide, Hydrogen chloride, Hydrogen cyanide, Chlorine, Antimony, Arsenic, Beryllium, Cadmium, Chromium, Cobalt, Manganese, Mercury, Nickel, Selenium.

Has Source Testing Been Done at the Facility? ☐Yes ☒No	Last Date when a Testing Program was Completed	If Program is Continuous, Give Approximate Testing Frequency

SECTION F1- ADDITIONAL FORMS

Indicate which of the following forms are attached and made part of the application	
☒Air Pollution Control Equipment (SFN 8532)	☒Fuel Burning Equipment Used for Indirect Heating (SFN 8518)
☐Construct/Operate Incinerators (SFN 8522)	☒Hazardous Air Pollutant (HAP) Sources (SFN 8329)
☐Natural Gas Processing Plants (SFN 11408)	☒Manufacturing or Processing Equipment (SFN 8520)
☐Glycol Dehydration Units (SFN 58923)	☒Volatile Organic Compounds Storage Tank (SFN 8535)
☒Flares (SFN 59652)	☒Internal Combustion Engines and Turbines (SFN 8891)
☐Rock, Sand, and Gravel Plants (SFN 8530)	☐Oil/Gas Production Facility Registration (SFN 14334)
☐Asphalt Concrete Plants (SFN 8526)	☐Grain, Feed, and Fertilizer Operations (SFN 8524)

SECTION F2 – OTHER ATTACHMENTS INCLUDED AS PART OF THIS APPLICATION

1.	***Supporting Emission Calculations (Emissions Inventory and BACT Analysis). Exhibits B and C***	4.	***Equipment Data Available from Vendors. (Part of Exhibit B)***
2.	***Tanks 4.09D Output files (Part of Exhibit B)***	5.	
3.	***Plot Plan and Block Flow Diagram. Exhibit E and F***	6.	

I, the undersigned applicant, am fully aware that statements made in this application and the attached exhibits and statements constitute the application for Permit(s) to Construct and/or Operate Air Contaminant sources from the North Dakota Department of Health and certify that the information in this application is true, correct and complete to the best of my knowledge and belief. Further, I agree to comply with the provisions of Chapter 23-25 of the North Dakota Century Code and all rules and regulations of the Department, or revisions thereof. I also understand the permit is nontransferable and, if granted a permit, I will promptly notify the Department upon sale or legal transfer of this permitted establishment.

Signature of Applicant	Date 09/26/2016

PERMIT APPLICATION FOR MANUFACTURING OR PROCESSING EQUIPMENT

NORTH DAKOTA DEPARTMENT OF HEALTH
DIVISION OF AIR QUALITY
SFN 8520 (09-12)

SECTION A – GENERAL INFORMATION

Equipment items operating as a functional unit may be grouped as one application		
Name of Firm or Organization ***Meridian Energy Group - Davis Refinery***		
Applicant's Name ***Tom Williams***		
Title ***VP of Planning &Permitting***	Telephone Number ***(707) 299-0182***	E-mail Address ***twilliams@meridianenergygroup.inc***
Mailing Address (Street & No.) ***2062 Business Center Drive, Suite 115***		
City ***Irvine***	State ***CA***	ZIP Code ***92612***

SECTION B - FACILITY INFORMATION

Facility Name ***Davis Refinery***		
ND Air Pollution Control Permit No. (If Applicable) ***N/A***		
Contact Person for Air Pollution Matters ***Tom Johnson***		
Title ***Vice President of Operations***	Telephone Number ***(409)795-0792***	E-mail Address ***tjohnson@meridianenergygrou***
Facility Address (Street & No.) ***37th Street***		
City ***Belfield***	State ***ND***	ZIP Code ***58622***
County ***Billings***	Latitude (Nearest Second) ***46°52'45"N***	Longitude (Nearest Second) ***103°14'55" W***
Legal Description of Facility Site ***Property ID 07 0000 00165 000 in the SE 1/4 of Section 2, Twp 139N, Range 100W and Property ID: 07 0000 00162 000 in the NW1/4 and SW 1/4 of Section 1, Twp 139N, Range 100W***	MSL Elevation at Facility ***2,685 feet***	Ref. Datum

SECTION C – EQUIPMENT INFORMATION

Type of Unit or Process (rotary dryer, cupola furnace, crusher, pelletizer, etc.) ***Catalytic Reforming Unit (CRU) #1***		
Make ***N/A***	Model ***N/A***	Date Installed ***TBD***
Capacity (manufacturer's or designer's guaranteed maximum) ***8,760 bbl/d***	Operating Capacity (specific units) ***8,760 bbl/d***	
Brief description of operation of unit or process: ***Fluid Catalytic Cracking Unit (FCCU) – Unit 107 with emission point 107-H-0701 for heater and regeneration emissions. It is expected four weeks of catalyst regeneration per reactor per year.***		

SECTION D – NORMAL OPERATING SCHEDULE

Hours Per Day	Days Per Week	Weeks Per Year	Peak Production Season (if any)	Dates of Annual Shutdown
24	***7***	***52***	***N/A***	***TBD***

SECTION E – RAW MATERIALS INTRODUCED INTO UNIT OR PROCESS

Include solid fuels such as coke or coal. *Exclude* indirect heat exchangers from this section
For indirect heat exchangers, complete form SFN 8518

Material	Hourly Process Weight (Pounds Per Hour)			Average Annual (Specify Units)	Intermittent Operation Only (Average Hours Per Week)
	Average	Maximum	Minimum		
Hydrotreated Naphtha	***8,760 bbl/d***	***TBD***	***TBD***	***3,197,400 bbl/d***	***TBD***

SECTION F – PRODUCTS OF UNIT OR PROCESS

Include all, even those not usable because they do not meet specifications

Material	Hourly Process Weight (Pounds Per Hour)			Average Annual (Specify Units)	Intermittent Operation Only (Average Hours Per Week)
	Average	Maximum	Minimum		
LPG	***TBD***	***TBD***	***TBD***	***TBD***	***TBD***
Reformate	***TBD***	***TBD***	***TBD***	***TBD***	***TBD***
Hydrogen	***TBD***	***TBD***	***TBD***	***TBD***	***TBD***
Off gas	***TBD***	***TBD***	***TBD***	***TBD***	***TBD***

SECTION G – FUELS USED

Coal (Tons/Yr)	% Sulfur	% Ash	Oil (Gal/Yr)	% Sulfur	Grade No.
N/A					

Natural Gas (Thousand CF/Yr)	LP Gas (Gal/Yr)	Other (Specify)
N/A	***N/A***	***Refinery fuel gas: 3,354 lb/h***

SECTION H – EMISSION POINTS

List each point separately, number each and locate on attached flow chart

Number	Stack Height (ft)	Stack Diameter (ft at top)	Gas Volume (ACFM)	Exit Temp (°F)	Gas Velocity (fps)
107-H-0701	***42***	***6***	***46,194.8***	***787.7***	***27.2***

SECTION I – AIR CONTAMINANTS EMITTED

Known or Suspected - Use same identification number as above

Number	Pollutant	Amount		Basis of Estimate
		Pounds/Hr	Tons/Yr	
107-H-0701	***CO***	***1.02E-03***	***4.47E-03***	***Emission factors from Table 1.4-2. AP 42, Chapter 1: External Combustion Sources. See Document P-5715043-01-001-18042-I001 "EMISSIONS INVENTORY" and P-5715043-01-001-18035-I001 "BACT Analysis"***
107-H-0701	***Pb***	***4.53E-05***	***1.99E-04***	

SECTION I – AIR CONTAMINANTS EMITTED (CONT.)

Known or Suspected - Use same identification number as above				
		Amoun		
Number	***Pollutant***	***Pounds/Hr***	***Tons/Yr***	***Basis of Estimate***
107-H-0701	***PM 10 Total***	***6.89E-01***	***3.02E+00***	***Emission factors from Table 1.4-2. AP 42, Chapter 1: External Combustion Sources. See Document P-5715043-01-001-18042-I001 "EMISSIONS INVENTORY" and P-5715043-01-001-18035-I001 "BACT Analysis"***
107-H-0701	***PM 10 Filterable***	***1.72E-01***	***7.55E-01***	
107-H-0701	***PM 2.5 Total***	***6.89E-01***	***3.02E+00***	
107-H-0701	***PM 2.5 Filterable***	***1.72E-01***	***7.55E-01***	
107-H-0701	***PM 2.5 Condensable***	***5.17E-01***	***2.26E+00***	
107-H-0701	***NOx***	***4.53E+00***	***4.97E+00***	
107-H-0701	***SO_2***	***5.44E-02***	***2.38E-01***	
107-H-0701	***VOC***	***4.99E-01***	***2.18E+00***	
107-H-0701	***Metal HAPs***	***6.76E-04***	***2.96E-03***	
107-H-0701	***Organic HAPs***	***1.81E-01***	***7.92E-01***	
107-H-0701	***Organic HAPs (regenerator)***	***1.62E+00***	***5.46E-01***	****See Form SFN 8329 for 107-H-0701 Regenerator HAPs emissions***

SECTION J – VOLATILE ORGANIC COMPOUNDS

Are any volatile organic compounds (VOCs) stored on premises? ☒ No ☐Yes – List Below See 40 CFR 51.100(s) for classes of compounds covered		
Material Stored	Size Tank (Gallons)	Vapor Control Device

SECTION K – ORGANIC SOLVENTS

Are any organic solvents used or produced? ☒ No (None or less than 50 gal/yr) ☐Yes – List Below

Type	Principal Use	Gallons/Yr Consumed	Gallons/Yr Produced

SECTION L – AIR POLLUTION CONTROL EQUIPMENT

Is any air pollution control equipment installed on this unit or process? ☒ No ☐ Yes
If 'Yes' attach form SFN 8532

SECTION M – MATERIAL STORAGE

Does the input material or product from this process contain finely divided material which could become airborne? ☒No ☐Yes

Describe storage methods used:

Storage Piles	Type of Material	Particle Diameter (Avg. or Screen Size)	Pile Size Average Tons	Pile Wetted	Pile Covered

Describe any fugitive dust problems:

Attach additional sheets if needed to explain any answers. Use separate form for each contaminant emitting process

Signature of Applicant	Date
	09/26/2016

SEND COMPLETED APPLICATION AND ALL ATTACHMENTS TO:

North Dakota Department of Health
Division of Air Quality
918 E Divide Ave., 2nd Floor
Bismarck, ND 58501-1947
(701) 328-5188

PERMIT APPLICATION FOR MANUFACTURING OR PROCESSING EQUIPMENT

NORTH DAKOTA DEPARTMENT OF HEALTH
DIVISION OF AIR QUALITY
SFN 8520 (09-12)

SECTION A – GENERAL INFORMATION

Equipment items operating as a functional unit may be grouped as one application		
Name of Firm or Organization ***Meridian Energy Group - Davis Refinery***		
Applicant's Name ***Tom Williams***		
Title ***VP of Planning &Permitting***	Telephone Number ***(707) 299-0182***	E-mail Address ***twilliams@meridianenergygroup.inc***
Mailing Address (Street & No.) ***2062 Business Center Drive, Suite 115***		
City ***Irvine***	State ***CA***	ZIP Code ***92612***

SECTION B - FACILITY INFORMATION

Facility Name ***Davis Refinery***		
ND Air Pollution Control Permit No. (If Applicable) ***N/A***		
Contact Person for Air Pollution Matters ***Tom Johnson***		
Title ***Vice President of Operations***	Telephone Number ***(409)795-0792***	E-mail Address ***tjohnson@meridianenergygrou***
Facility Address (Street & No.) ***37th Street***		
City ***Belfield***	State ***ND***	ZIP Code ***58622***
County ***Billings***	Latitude (Nearest Second) ***46°52'45"N***	Longitude (Nearest Second) ***103°14'55" W***
Legal Description of Facility Site ***Property ID 07 0000 00165 000 in the SE 1/4 of Section 2, Twp 139N, Range 100W and Property ID: 07 0000 00162 000 in the NW1/4 and SW 1/4 of Section 1, Twp 139N, Range 100W***	MSL Elevation at Facility ***2,685 feet***	Ref. Datum

SECTION C – EQUIPMENT INFORMATION

Type of Unit or Process (rotary dryer, cupola furnace, crusher, pelletizer, etc.) ***Catalytic Reforming Unit (CRU) #2***		
Make ***N/A***	Model ***N/A***	Date Installed ***TBD***
Capacity (manufacturer's or designer's guaranteed maximum) ***3,960 bbl/d***	Operating Capacity (specific units) ***3,960 bbl/d***	
Brief description of operation of unit or process: ***Fluid Catalytic Cracking Unit (FCCU) – Unit 106 with emission point 106-H-0601 for heater and regeneration emissions. It is expected four weeks of catalyst regeneration per reactor per year.***		

SECTION D – NORMAL OPERATING SCHEDULE

Hours Per Day	Days Per Week	Weeks Per Year	Peak Production Season (if any)	Dates of Annual Shutdown
24	***7***	***52***	***N/A***	***TBD***

SECTION E – RAW MATERIALS INTRODUCED INTO UNIT OR PROCESS

Include solid fuels such as coke or coal. *Exclude* indirect heat exchangers from this section
For indirect heat exchangers, complete form SFN 8518

Material	Hourly Process Weight (Pounds Per Hour)			Average Annual (Specify Units)	Intermittent Operation Only (Average Hours Per Week)
	Average	Maximum	Minimum		
Hydrotreated Naphtha	***3,960 bbl/d***	***TBD***	***TBD***	***1,445,400 bbl/d***	***TBD***

SECTION F – PRODUCTS OF UNIT OR PROCESS

Include all, even those not usable because they do not meet specifications

Material	Hourly Process Weight (Pounds Per Hour)			Average Annual (Specify Units)	Intermittent Operation Only (Average Hours Per Week)
	Average	Maximum	Minimum		
LPG	***TBD***	***TBD***	***TBD***	***TBD***	***TBD***
Reformate	***TBD***	***TBD***	***TBD***	***TBD***	***TBD***
Hydrogen	***TBD***	***TBD***	***TBD***	***TBD***	***TBD***
Off gas	***TBD***	***TBD***	***TBD***	***TBD***	***TBD***

SECTION G – FUELS USED

Coal (Tons/Yr)	% Sulfur	% Ash	Oil (Gal/Yr)	% Sulfur	Grade No.
N/A					

Natural Gas (Thousand CF/Yr)	LP Gas (Gal/Yr)	Other (Specify)
N/A	***N/A***	***Refinery fuel gas: 1,513 lb/h***

SECTION H – EMISSION POINTS

List each point separately, number each and locate on attached flow chart

Number	Stack Height (ft)	Stack Diameter (ft at top)	Gas Volume (ACFM)	Exit Temp (°F)	Gas Velocity (fps)
106-H-0601	***42***	***4***	***20,769.9***	***786.2***	***27.5***

SECTION I – AIR CONTAMINANTS EMITTED

Known or Suspected - Use same identification number as above

Number	Pollutant	Amount		Basis of Estimate
		Pounds/Hr	Tons/Yr	
106-H-0601	***CO***	***4.60E-04***	***2.02E-03***	***Emission factors from Table 1.4-2. AP 42, Chapter 1: External Combustion Sources. See Document P-5715043-01-001-18042-I001 "EMISSIONS INVENTORY" and P-5715043-01-001-18035-I001 "BACT Analysis"***
106-H-0601	***Pb***	***2.04E-05***	***8.96E-05***	

SECTION I – AIR CONTAMINANTS EMITTED (CONT.)

Known or Suspected - Use same identification number as above				
		Amoun		
Number	***Pollutant***	***Pounds/Hr***	***Tons/Yr***	***Basis of Estimate***
106-H-0601	***PM 10 Total***	***3.11E-01***	***1.36E+00***	***Emission factors from Table 1.4-2. AP 42, Chapter 1: External Combustion Sources. See Document P-5715043-01-001-18042-I001 "EMISSIONS INVENTORY" and P-5715043-01-001-18035-I001 "BACT Analysis"***
106-H-0601	***PM 10 Filterable***	***7.77E-02***	***3.40E-01***	
106-H-0601	***PM 2.5 Total***	***3.11E-01***	***1.36E+00***	
106-H-0601	***PM 2.5 Filterable***	***7.77E-02***	***3.40E-01***	
106-H-0601	***PM 2.5 Condensable***	***2.33E-01***	***1.02E+00***	
106-H-0601	***NOx***	***2.05E+00***	***2.24E+00***	
106-H-0601	***SO_2***	***2.45E-02***	***1.08E-01***	
106-H-0601	***VOC***	***2.25E-01***	***9.86E-01***	
106-H-0601	***Metal HAPs***	***3.05E-04***	***1.34E-03***	
106-H-0601	***Organic HAPs***	***8.16E-02***	***3.57E-01***	
106-H-0601	***Organic HAPs (regenerator)***	***7.34E-01***	***2.47E-01***	****See Form SFN 8329 for 106-H-0601 Regenerator HAPs emissions***

SECTION J – VOLATILE ORGANIC COMPOUNDS

Are any volatile organic compounds (VOCs) stored on premises? ☒ No ☐Yes – List Below See 40 CFR 51.100(s) for classes of compounds covered		
Material Stored	Size Tank (Gallons)	Vapor Control Device

SECTION K – ORGANIC SOLVENTS

Are any organic solvents used or produced? ☒ No (None or less than 50 gal/yr) ☐Yes – List Below

Type	Principal Use	Gallons/Yr Consumed	Gallons/Yr Produced

SECTION L – AIR POLLUTION CONTROL EQUIPMENT

Is any air pollution control equipment installed on this unit or process? ☒ No ☐ Yes
If 'Yes' attach form SFN 8532

SECTION M – MATERIAL STORAGE

Does the input material or product from this process contain finely divided material which could become airborne? ☒No ☐Yes

Describe storage methods used:

Storage Piles	Type of Material	Particle Diameter (Avg. or Screen Size)	Pile Size Average Tons	Pile Wetted	Pile Covered

Describe any fugitive dust problems:

Attach additional sheets if needed to explain any answers. Use separate form for each contaminant emitting process

Signature of Applicant	Date
Jon Wilkins	09/26/2016

SEND COMPLETED APPLICATION AND ALL ATTACHMENTS TO:

North Dakota Department of Health
Division of Air Quality
918 E Divide Ave., 2nd Floor
Bismarck, ND 58501-1947
(701) 328-5188

PERMIT APPLICATION FOR MANUFACTURING OR PROCESSING EQUIPMENT

NORTH DAKOTA DEPARTMENT OF HEALTH
DIVISION OF AIR QUALITY
SFN 8520 (09-12)

SECTION A – GENERAL INFORMATION

Equipment items operating as a functional unit may be grouped as one application		
Name of Firm or Organization ***Meridian Energy Group - Davis Refinery***		
Applicant's Name ***Tom Williams***		
Title ***VP of Planning &Permitting***	Telephone Number ***(707) 299-0182***	E-mail Address ***twilliams@meridianenergygroup.inc***
Mailing Address (Street & No.) ***2062 Business Center Drive, Suite 115***		
City ***Irvine***	State ***CA***	ZIP Code ***92612***

SECTION B - FACILITY INFORMATION

Facility Name ***Davis Refinery***			
ND Air Pollution Control Permit No. (If Applicable) ***N/A***			
Contact Person for Air Pollution Matters ***Tom Johnson***			
Title ***Vice President of Operations***	Telephone Number ***(409)795-0792***	E-mail Address ***tjohnson@meridianenergygrou***	
Facility Address (Street & No.) ***37th Street***			
City ***Belfield***	State ***ND***	ZIP Code ***58622***	
County ***Billings***	Latitude (Nearest Second) ***46°52'45"N***	Longitude (Nearest Second) ***103°14'55" W***	
Legal Description of Facility Site ***Property ID 07 0000 00165 000 in the SE 1/4 of Section 2, Twp 139N, Range 100W and Property ID: 07 0000 00162 000 in the NW1/4 and SW 1/4 of Section 1, Twp 139N, Range 100W***	MSL Elevation at Facility ***2,685 feet***	Ref. Datum	

SECTION C – EQUIPMENT INFORMATION

Type of Unit or Process (rotary dryer, cupola furnace, crusher, pelletizer, etc.) ***Fluid Catalytic Cracking Unit (FCCU)***		
Make ***N/A***	Model ***N/A***	Date Installed ***TBD***
Capacity (manufacturer's or designer's guaranteed maximum) ***14,377 bbl/d, with a max. operating Coke Burn-off rate of 8,614 lb/h***	Operating Capacity (specific units) ***14,377 bbl/d***	
Brief description of operation of unit or process: ***Fluid Catalytic Cracking Unit (FCCU) – Unit 112 with two emission points, 112-H-1201 and 112-VS-1201, equipped with emission control devices***		

SECTION D – NORMAL OPERATING SCHEDULE

Hours Per Day	Days Per Week	Weeks Per Year	Peak Production Season (if any)	Dates of Annual Shutdown
24	***7***	***52***	***N/A***	***TBD***

SECTION E – RAW MATERIALS INTRODUCED INTO UNIT OR PROCESS

Include solid fuels such as coke or coal. *Exclude* indirect heat exchangers from this section
For indirect heat exchangers, complete form SFN 8518

Material	Hourly Process Weight (Pounds Per Hour)			Average Annual (Specify Units)	Intermittent Operation Only (Average Hours Per Week)
	Average	Maximum	Minimum		
VGO (FCCU Feed)	***14,377 bbl/d***	***TBD***	***TBD***	***5,247,605 bbl/d***	***TBD***

SECTION F – PRODUCTS OF UNIT OR PROCESS

Include all, even those not usable because they do not meet specifications

Material	Hourly Process Weight (Pounds Per Hour)			Average Annual (Specify Units)	Intermittent Operation Only (Average Hours Per Week)
	Average	Maximum	Minimum		
C3/C4	***TBD***	***TBD***	***TBD***	***TBD***	***TBD***
FCC Naphtha	***TBD***	***TBD***	***TBD***	***TBD***	***TBD***
HCGO	***TBD***	***TBD***	***TBD***	***TBD***	***TBD***

SECTION G – FUELS USED

Coal (Tons/Yr)	% Sulfur	% Ash	Oil (Gal/Yr)	% Sulfur	Grade No.
N/A					

Natural Gas (Thousand CF/Yr)	LP Gas (Gal/Yr)	Other (Specify)
N/A	***N/A***	***Refinery fuel gas: 1,028 lb/h***

SECTION H – EMISSION POINTS

List each point separately, number each and locate on attached flow chart

Number	Stack Height (ft)	Stack Diameter (ft at top)	Gas Volume (ACFM)	Exit Temp (°F)	Gas Velocity (fps)
112-H-1201	***72***	***5.5***	***14,110.5***	***785***	***9.9***
112-VS-1201	***120***	***4***	***28,110***	***480***	***64.8***

SECTION I – AIR CONTAMINANTS EMITTED

Known or Suspected - Use same identification number as above

Number	Pollutant	Amount		Basis of Estimate
		Pounds/Hr	Tons/Yr	
112-H-1201	***CO***	***3.13E-04***	***1.37E-03***	***Emission factors from Table 1.4-2. AP 42, Chapter 1: External Combustion Sources. See Document P-5715043-01-001-18042-I001 "EMISSIONS INVENTORY" and P-5715043-01-001-18035-I001 "BACT Analysis"***
112-H-1201	***Pb***	***1.39E-05***	***6.08E-05***	

SECTION I – AIR CONTAMINANTS EMITTED (CONT.)

Known or Suspected - Use same identification number as above				
		Amount		
Number	Pollutant	Pounds/Hr	Tons/Yr	Basis of Estimate
112-H-1201	***PM 10 Total***	***2.11E-01***	***9.25E-01***	***Emission factors from Table 1.4-2. AP 42, Chapter 1: External Combustion Sources. See Document P-5715043-01-001-18042-I001 "EMISSIONS INVENTORY" and P-5715043-01-001-18035-I001 "BACT Analysis"***
112-H-1201	***PM 10 Filterable***	***5.28E-02***	***2.31E-01***	
112-H-1201	***PM 2.5 Total***	***2.11E-01***	***9.25E-01***	
112-H-1201	***PM 2.5 Filterable***	***5.28E-02***	***2.31E-01***	
112-H-1201	***PM 2.5 Condensable***	***1.58E-01***	***6.94E-01***	
112-H-1201	***NOx***	***1.39E+00***	***1.52E+00***	
112-H-1201	***SO_2***	***1.67E-02***	***7.30E-02***	
112-H-1201	***VOC***	***1.53E-01***	***6.70E-01***	
112-H-1201	***Metal HAPs***	***2.07E-04***	***9.08E-04***	***See Form SFN 8329 for 112-H-1201 HAPs emissions***
112-H-1201	***Organic HAPs***	***5,54E-02***	***2,43E-01***	
112-VS-1201	***CO***	***0***	***0***	***Emission factors from Table 5-4 of the Emissions Estimation Protocol for Petroleum Refineries. See Document P-5715043-01-001-18042-I001 "EMISSIONS INVENTORY" and P-5715043-01-001-18035-I001 "BACT Analysis"***
112-VS-1201	***Pb***	***5.02E-06***	***2.20E-05***	
112-VS-1201	***PM 10 Total***	***0.25***	***1.09***	
112-VS-1201	***PM 10 Filterable***	***0.16***	***0.72***	
112-VS-1201	***PM 2.5 Total***	***0.23***	***0.99***	
112-VS-1201	***PM 2.5 Filterable***	***0.14***	***0.62***	
112-VS-1201	***PM 2.5 Condensable***	***0.08***	***0.37***	

SECTION I – AIR CONTAMINANTS EMITTED (CONT.)

Known or Suspected - Use same identification number as above				
		Amount		
Number	Pollutant	Pounds/Hr	Tons/Yr	Basis of Estimate
112-VS-1201	***NOx***	***0.851***	***3.73***	***Emission factors from Table 5-4 of the Emissions Estimation Protocol for Petroleum Refineries. See Document P-5715043-01-001-18042-I001 "EMISSIONS INVENTORY" and P-5715043-01-001-18035-I001 "BACT Analysis"***
112-VS-1201	***SO_2***	***2.95***	***12.93***	
112-VS-1201	***VOC***	***1.32***	***5.77***	
112-VS-1201	***Total HAPs***	***2.93E-01***	***0.94***	***See Form SFN 8329 for 112-VS-1201 HAPs emissions***

SECTION J – VOLATILE ORGANIC COMPOUNDS

Are any volatile organic compounds (VOCs) stored on premises? ☒ No ☐Yes – List Below See 40 CFR 51.100(s) for classes of compounds covered		
Material Stored	Size Tank (Gallons)	Vapor Control Device

SECTION K – ORGANIC SOLVENTS

Are any organic solvents used or produced? ☒ No (None or less than 50 gal/yr) ☐Yes – List Below			
Type	Principal Use	Gallons/Yr Consumed	Gallons/Yr Produced

SECTION L – AIR POLLUTION CONTROL EQUIPMENT

Is any air pollution control equipment installed on this unit or process? ☐ No ☒ Yes
If 'Yes' attach form SFN 8532

SECTION M – MATERIAL STORAGE

Does the input material or product from this process contain finely divided material which could become airborne? ☐No ☒Yes

Describe storage methods used: ***Enclosed bins for storage of spent catalyst.***

Storage Piles	Type of Material	Particle Diameter (Avg. or Screen Size)	Pile Size Average Tons	Pile Wetted	Pile Covered
N/A	***Spent catalyst***	***<2.5 μm***	***N/A***	***N/A***	***N/A***

Describe any fugitive dust problems: ***The particulate matter generated by the displacement of air within the bin as it fills, which will be controlled by a filter bag (sock).***
Attach additional sheets if needed to explain any answers. Use separate form for each contaminant emitting process

Signature of Applicant	Date 09/26/2016

SEND COMPLETED APPLICATION AND ALL ATTACHMENTS TO:

North Dakota Department of Health
Division of Air Quality
918 E Divide Ave., 2nd Floor
Bismarck, ND 58501-1947
(701) 328-5188

PERMIT APPLICATION FOR MANUFACTURING OR PROCESSING EQUIPMENT

NORTH DAKOTA DEPARTMENT OF HEALTH
DIVISION OF AIR QUALITY
SFN 8520 (09-12)

SECTION A – GENERAL INFORMATION

Equipment items operating as a functional unit may be grouped as one application		
Name of Firm or Organization ***Meridian Energy Group - Davis Refinery***		
Applicant's Name ***Tom Williams***		
Title ***VP of Planning &Permitting***	Telephone Number ***(707) 299-0182***	E-mail Address ***twilliams@meridianenergygroup.inc***
Mailing Address (Street & No.) ***2062 Business Center Drive, Suite 115***		
City ***Irvine***	State ***CA***	ZIP Code ***92612***

SECTION B - FACILITY INFORMATION

Facility Name ***Davis Refinery***		
ND Air Pollution Control Permit No. (If Applicable) ***N/A***		
Contact Person for Air Pollution Matters ***Tom Johnson***		
Title ***Vice President of Operations***	Telephone Number ***(409)795-0792***	E-mail Address ***tjohnson@meridianenergygrou***
Facility Address (Street & No.) ***37th Street***		
City ***Belfield***	State ***ND***	ZIP Code ***58622***
County ***Billings***	Latitude (Nearest Second) ***46°52'45"N***	Longitude (Nearest Second) ***103°14'55" W***
Legal Description of Facility Site ***Property ID 07 0000 00165 000 in the SE 1/4 of Section 2, Twp 139N, Range 100W and Property ID: 07 0000 00162 000 in the NW1/4 and SW 1/4 of Section 1, Twp 139N, Range 100W***	MSL Elevation at Facility ***2,685 feet***	Ref. Datum

SECTION C – EQUIPMENT INFORMATION

Type of Unit or Process (rotary dryer, cupola furnace, crusher, pelletizer, etc.) ***Sulfur Recovery Unit (SRU)***		
Make ***N/A***	Model ***N/A***	Date Installed ***TBD***
Capacity (manufacturer's or designer's guaranteed maximum) ***10.14 ltons of sulphur / day***	Operating Capacity (specific units) ***10.14 ltons of Sulphur / day***	
Brief description of operation of unit or process: ***LO-CAT® Sulfur Recovery technology (Unit 122), with two vents (from oxidizer and flash drum units), directed to a Thermal Oxidizer for one emission point: 122-H-2201.***		

SECTION D – NORMAL OPERATING SCHEDULE

Hours Per Day	Days Per Week	Weeks Per Year	Peak Production Season (if any)	Dates of Annual Shutdown
24	***7***	***52***	***N/A***	***N/A***

SECTION E – RAW MATERIALS INTRODUCED INTO UNIT OR PROCESS

Include solid fuels such as coke or coal. *Exclude* indirect heat exchangers from this section
For indirect heat exchangers, complete form SFN 8518

Material	Hourly Process Weight (Pounds Per Hour)			Average Annual (Specify Units)	Intermittent Operation Only (Average Hours Per Week)
	Average	Maximum	Minimum		
Acid and Sour Gas	***9.4 MMSCFD***	***TBD***	***TBD***	***3,431 MMSCF***	***N/A***

SECTION F – PRODUCTS OF UNIT OR PROCESS

Include all, even those not usable because they do not meet specifications

Material	Hourly Process Weight (Pounds Per Hour)			Average Annual (Specify Units)	Intermittent Operation Only (Average Hours Per Week)
	Average	Maximum	Minimum		
Elemental Sulphur	***946,4***	***TBD***	***TBD***	***3,701.1 lton***	***N/A***
Treated flue gas	***16,081***	***TBD***	***TBD***	***140,869,560 lb (3,410.8 MMACF)***	***N/A***

SECTION G – FUELS USED

Coal (Tons/Yr)	% Sulfur	% Ash	Oil (Gal/Yr)	% Sulfur	Grade No.
N/A					

Natural Gas (Thousand CF/Yr)	LP Gas (Gal/Yr)	Other (Specify)
N/A	***N/A***	

SECTION H – EMISSION POINTS

List each point separately, number each and locate on attached flow chart

Number	Stack Height (ft)	Stack Diameter (ft at top)	Gas Volume (ACFM)	Exit Temp (°F)	Gas Velocity (fps)
122-H-2201	***60***	***1.7***	***6,489.5 ACFM***	***414.5***	***50***

SECTION I – AIR CONTAMINANTS EMITTED

Known or Suspected - Use same identification number as above

Number	Pollutant	Amount		Basis of Estimate
		Pounds/Hr	Tons/Yr	
122-H-2201	***VOC***	***0.34***	***1.50***	***Engineering data from vendor and Table 6-2 from Emissions Estimation Protocol for Petroleum Refineries. See Document P-5715043-01-001-18042-I001 "EMISSIONS INVENTORY" and P-5715043-01-001-18035-I001 "BACT Analysis"***
122-H-2201	***SO_2***	***0.04***	***0.20***	

SECTION I – AIR CONTAMINANTS EMITTED (CONT.)

Known or Suspected - Use same identification number as above

Number	Pollutant	Amount		Basis of Estimate
		Pounds/Hr	Tons/Yr	
122-H-2201	***CO***	***0.49***	***2.15***	***Engineering data from vendor and Table 6-2 from Emissions Estimation Protocol for Petroleum Refineries. See Document P-5715043-01-001-18042-I001 "EMISSIONS INVENTORY" and P-5715043-01-001-18035-I001 "BACT Analysis"***
122-H-2201	***NOx***	***0.11***	***0.47***	

SECTION J – VOLATILE ORGANIC COMPOUNDS

Are any volatile organic compounds (VOCs) stored on premises? ☒ No ☐Yes – List Below See 40 CFR 51.100(s) for classes of compounds covered

Material Stored	Size Tank (Gallons)	Vapor Control Device

SECTION K – ORGANIC SOLVENTS

Are any organic solvents used or produced? ☒ No (None or less than 50 gal/yr) ☐Yes – List Below

Type	Principal Use	Gallons/Yr Consumed	Gallons/Yr Produced

SECTION L – AIR POLLUTION CONTROL EQUIPMENT

Is any air pollution control equipment installed on this unit or process? ☐ No ☒ Yes
If 'Yes' attach form SFN 8532

SECTION M – MATERIAL STORAGE

Does the input material or product from this process contain finely divided material which could become airborne? ☒No ☐Yes

Describe storage methods used:

Storage Piles	Type of Material	Particle Diameter (Avg. or Screen	Pile Size Average Tons	Pile Wetted	Pile Covered

Describe any fugitive dust problems:

Attach additional sheets if needed to explain any answers. Use separate form for each contaminant emitting process

Signature of Applicant	Date
	09/26/2016

SEND COMPLETED APPLICATION AND ALL ATTACHMENTS TO:

North Dakota Department of Health
Division of Air Quality
918 E Divide Ave., 2nd Floor
Bismarck, ND 58501-1947
(701) 328-5188

PERMIT APPLICATION FOR MANUFACTURING OR PROCESSING EQUIPMENT

NORTH DAKOTA DEPARTMENT OF HEALTH
DIVISION OF AIR QUALITY
SFN 8520 (09-12)

SECTION A – GENERAL INFORMATION

Equipment items operating as a functional unit may be grouped as one application		
Name of Firm or Organization ***Meridian Energy Group - Davis Refinery***		
Applicant's Name ***Tom Williams***		
Title ***VP of Planning &Permitting***	Telephone Number ***(707) 299-0182***	E-mail Address ***twilliams@meridianenergygroup.inc***
Mailing Address (Street & No.) ***2062 Business Center Drive, Suite 115***		
City ***Irvine***	State ***CA***	ZIP Code ***92612***

SECTION B - FACILITY INFORMATION

Facility Name ***Davis Refinery***			
ND Air Pollution Control Permit No. (If Applicable) ***N/A***			
Contact Person for Air Pollution Matters ***Tom Johnson***			
Title ***Vice President of Operations***	Telephone Number ***(409)795-0792***	E-mail Address ***tjohnson@meridianenergygrou***	
Facility Address (Street & No.) ***37th Street***			
City ***Belfield***	State ***ND***	ZIP Code ***58622***	
County ***Billings***	Latitude (Nearest Second) ***46°52'45"N***	Longitude (Nearest Second) ***103°14'55" W***	
Legal Description of Facility Site ***Property ID 07 0000 00165 000 in the SE 1/4 of Section 2, Twp 139N, Range 100W and Property ID: 07 0000 00162 000 in the NW1/4 and SW 1/4 of Section 1, Twp 139N, Range 100W***	MSL Elevation at Facility ***2,685 feet***	Ref. Datum	

SECTION C – EQUIPMENT INFORMATION

Type of Unit or Process (rotary dryer, cupola furnace, crusher, pelletizer, etc.) ***Process equipment leaks in VOC and Natural Gas service***		
Make ***N/A***	Model ***N/A***	Date Installed ***N/A***
Capacity (manufacturer's or designer's guaranteed maximum) ***N/A***	Operating Capacity (specific units) ***N/A***	
Brief description of operation of unit or process: ***VOC leaks (fugitive) from process equipment throughout the Refinery, emission point FUG-1, controlled by a Leak Detection and Repair (LDAR) Program with a threshold of 500 ppmv for leak detection, that includes imaging technology, and directed corrective action.***		

SECTION D – NORMAL OPERATING SCHEDULE

Hours Per Day	Days Per Week	Weeks Per Year	Peak Production Season (if any)	Dates of Annual Shutdown
24	***7***	***52***	***N/A***	***N/A***

SECTION E – RAW MATERIALS INTRODUCED INTO UNIT OR PROCESS

Include solid fuels such as coke or coal. *Exclude* indirect heat exchangers from this section
For indirect heat exchangers, complete form SFN 8518

Material	Hourly Process Weight (Pounds Per Hour)			Average Annual (Specify Units)	Intermittent Operation Only (Average Hours Per Week)
	Average	Maximum	Minimum		
N/A	***N/A***	***N/A***	***N/A***	***N/A***	***N/A***

SECTION F – PRODUCTS OF UNIT OR PROCESS

Include all, even those not usable because they do not meet specifications

Material	Hourly Process Weight (Pounds Per Hour)			Average Annual (Specify Units)	Intermittent Operation Only (Average Hours Per Week)
	Average	Maximum	Minimum		
N/A	***N/A***	***N/A***	***N/A***	***N/A***	***N/A***

SECTION G – FUELS USED

Coal (Tons/Yr)	% Sulfur	% Ash	Oil (Gal/Yr)	% Sulfur	Grade No.
N/A					

Natural Gas (Thousand CF/Yr)	LP Gas (Gal/Yr)	Other (Specify)
N/A	***N/A***	***N/A***

SECTION H – EMISSION POINTS

List each point separately, number each and locate on attached flow chart

Number	Stack Height (ft)	Stack Diameter (ft at top)	Gas Volume (ACFM)	Exit Temp (°F)	Gas Velocity (fps)
FUG-1	***N/A***	***N/A***	***N/A***	***N/A***	***N/A***

SECTION I – AIR CONTAMINANTS EMITTED

Known or Suspected - Use same identification number as above

Number	Pollutant	Amount		Basis of Estimate
		Pounds/Hr	Tons/Yr	
FUG-1	***VOC***	***4.81***	***21.06***	***Emission factors from Tables 2-5, 2-6 and 2-7 of the Emissions Estimation Protocol for Petroleum Refineries. See Document P-5715043-01-001-18042-I001 "EMISSIONS INVENTORY" and P-5715043-01-001-18035-I001 "BACT Analysis"***
FUG-1	***HAPs***	***0.55***	***2.39***	

SECTION J – VOLATILE ORGANIC COMPOUNDS

Are any volatile organic compounds (VOCs) stored on premises? ☒ No ☐Yes – List Below See 40 CFR 51.100(s) for classes of compounds covered

Material Stored	Size Tank (Gallons)	Vapor Control Device

SECTION K – ORGANIC SOLVENTS

Are any organic solvents used or produced? ☒ No (None or less than 50 gal/yr) ☐Yes – List Below

Type	Principal Use	Gallons/Yr Consumed	Gallons/Yr Produced

SECTION L – AIR POLLUTION CONTROL EQUIPMENT

Is any air pollution control equipment installed on this unit or process? ☒ No ☐ Yes
If 'Yes' attach form SFN 8532

SECTION M – MATERIAL STORAGE

Does the input material or product from this process contain finely divided material which could become airborne? ☒No ☐Yes

Describe storage methods used:

Storage Piles	Type of Material	Particle Diameter (Avg. or Screen	Pile Size Average Tons	Pile Wetted	Pile Covered

Describe any fugitive dust problems:

Attach additional sheets if needed to explain any answers. Use separate form for each contaminant emitting process

Signature of Applicant	Date
Jon Wilson	09/26/2016

SEND COMPLETED APPLICATION AND ALL ATTACHMENTS TO:

North Dakota Department of Health
Division of Air Quality
918 E Divide Ave., 2nd Floor
Bismarck, ND 58501-1947
(701) 328-5188

PERMIT APPLICATION FOR MANUFACTURING OR PROCESSING EQUIPMENT

NORTH DAKOTA DEPARTMENT OF HEALTH
DIVISION OF AIR QUALITY
SFN 8520 (09-12)

SECTION A – GENERAL INFORMATION

Equipment items operating as a functional unit may be grouped as one application		
Name of Firm or Organization ***Meridian Energy Group - Davis Refinery***		
Applicant's Name ***Tom Williams***		
Title ***VP of Planning &Permitting***	Telephone Number ***(707) 299-0182***	E-mail Address ***twilliams@meridianenergygroup.inc***
Mailing Address (Street & No.) ***2062 Business Center Drive, Suite 115***		
City ***Irvine***	State ***CA***	ZIP Code ***92612***

SECTION B - FACILITY INFORMATION

Facility Name ***Davis Refinery***		
ND Air Pollution Control Permit No. (If Applicable) ***N/A***		
Contact Person for Air Pollution Matters ***Tom Johnson***		
Title ***Vice President of Operations***	Telephone Number ***(409)795-0792***	E-mail Address ***tjohnson@meridianenergygrou***
Facility Address (Street & No.) ***37th Street***		
City ***Belfield***	State ***ND***	ZIP Code ***58622***
County ***Billings***	Latitude (Nearest Second) ***46°52'45"N***	Longitude (Nearest Second) ***103°14'55" W***
Legal Description of Facility Site ***Property ID 07 0000 00165 000 in the SE 1/4 of Section 2, Twp 139N, Range 100W and Property ID: 07 0000 00162 000 in the NW1/4 and SW 1/4 of Section 1, Twp 139N, Range 100W***	MSL Elevation at Facility ***2,685 feet***	Ref. Datum

SECTION C – EQUIPMENT INFORMATION

Type of Unit or Process (rotary dryer, cupola furnace, crusher, pelletizer, etc.) ***Rail Loading-Unloading System***		
Make ***N/A***	Model ***N/A***	Date Installed ***TBD***
Capacity (manufacturer's or designer's guaranteed maximum) ***TBD***	Operating Capacity (specific units) ***TBD***	
Brief description of operation of unit or process: ***Rail Loading-Unloading Operations, emission point 209RL, equipped with vapor recovery or dedicated flare for vapor control.***		

SECTION D – NORMAL OPERATING SCHEDULE

Hours Per Day	Days Per Week	Weeks Per Year	Peak Production Season (if any)	Dates of Annual Shutdown
24	***7***	***52***	***N/A***	***N/A***

SECTION E – RAW MATERIALS INTRODUCED INTO UNIT OR PROCESS

Include solid fuels such as coke or coal. *Exclude* indirect heat exchangers from this section
For indirect heat exchangers, complete form SFN 8518

Material	Hourly Process Weight (Pounds Per Hour)			Average Annual (Specify Units)	Intermittent Operation Only (Average Hours Per Week)
	Average	Maximum	Minimum		
Crude Oil	***55,000 bbl/d***	***55,000 bbl/d***	***55,000 bbl/d***	***20,075,000 bbl***	***N/A***

SECTION F – PRODUCTS OF UNIT OR PROCESS

Include all, even those not usable because they do not meet specifications

Material	Hourly Process Weight (Pounds Per Hour)			Average Annual (Specify Units)	Intermittent Operation Only (Average Hours Per Week)
	Average	Maximum	Minimum		
Gasoline	***22,666 bbl/d***	***22,666 bbl/d***	***22,666 bbl/d***	***8,272,998 bbl***	***N/A***
Jet Fuel	***6,349 bbl/d***	***6,349 bbl/d***	***6,349 bbl/d***	***2,317,294 bbl***	***N/A***
Diesel	***8,327 bbl/d***	***8,327 bbl/d***	***8,327 bbl/d***	***3,039,446 bbl***	***N/A***
Fuel Oil	***3,797 bbl/d***	***3,797 bbl/d***	***3,797 bbl/d***	***1,385,905 bbl***	***N/A***

SECTION G – FUELS USED

Coal (Tons/Yr)	% Sulfur	% Ash	Oil (Gal/Yr)	% Sulfur	Grade No.
N/A					

Natural Gas (Thousand CF/Yr)	LP Gas (Gal/Yr)	Other (Specify)
N/A	***N/A***	***N/A***

SECTION H – EMISSION POINTS

List each point separately, number each and locate on attached flow chart

Number	Stack Height (ft)	Stack Diameter (ft at top)	Gas Volume (ACFM)	Exit Temp (°F)	Gas Velocity (fps)
209RL	***N/A***	***N/A***	***N/A***	***N/A***	***N/A***

SECTION I – AIR CONTAMINANTS EMITTED

Known or Suspected - Use same identification number as above

Number	Pollutant	Amount		Basis of Estimate
		Pounds/Hr	Tons/Yr	
209RL	***VOC***	***0.7***	***3.0***	***Emission factors from AP-42 Chapter 5, Table 5.2-5. See Document P-5715043-01-001-18042-I001 "EMISSIONS INVENTORY" and P-5715043-01-001-18035-I001 "BACT Analysis"***

SECTION J – VOLATILE ORGANIC COMPOUNDS

Are any volatile organic compounds (VOCs) stored on premises? ☒ No ☐Yes – List Below See 40 CFR 51.100(s) for classes of compounds covered

Material Stored	Size Tank (Gallons)	Vapor Control Device

SECTION K – ORGANIC SOLVENTS

Are any organic solvents used or produced? ☒ No (None or less than 50 gal/yr) ☐Yes – List Below

Type	Principal Use	Gallons/Yr Consumed	Gallons/Yr Produced

SECTION L – AIR POLLUTION CONTROL EQUIPMENT

Is any air pollution control equipment installed on this unit or process? ☒ No ☐ Yes
If 'Yes' attach form SFN 8532

SECTION M – MATERIAL STORAGE

Does the input material or product from this process contain finely divided material which could become airborne? ☒No ☐Yes

Describe storage methods used:

Storage Piles	Type of Material	Particle Diameter (Avg. or Screen	Pile Size Average Tons	Pile Wetted	Pile Covered

Describe any fugitive dust problems:

Attach additional sheets if needed to explain any answers. Use separate form for each contaminant emitting process

Signature of Applicant	Date
Tom Williams	09/26/2016

SEND COMPLETED APPLICATION AND ALL ATTACHMENTS TO:

North Dakota Department of Health
Division of Air Quality
918 E Divide Ave., 2nd Floor
Bismarck, ND 58501-1947
(701) 328-5188

PERMIT APPLICATION FOR MANUFACTURING OR PROCESSING EQUIPMENT

NORTH DAKOTA DEPARTMENT OF HEALTH
DIVISION OF AIR QUALITY
SFN 8520 (09-12)

SECTION A – GENERAL INFORMATION

Equipment items operating as a functional unit may be grouped as one application		
Name of Firm or Organization ***Meridian Energy Group - Davis Refinery***		
Applicant's Name ***Tom Williams***		
Title ***VP of Planning &Permitting***	Telephone Number ***(707) 299-0182***	E-mail Address ***twilliams@meridianenergygroup.inc***
Mailing Address (Street & No.) ***2062 Business Center Drive, Suite 115***		
City ***Irvine***	State ***CA***	ZIP Code ***92612***

SECTION B - FACILITY INFORMATION

Facility Name ***Davis Refinery***		
ND Air Pollution Control Permit No. (If Applicable) ***N/A***		
Contact Person for Air Pollution Matters ***Tom Johnson***		
Title ***Vice President of Operations***	Telephone Number ***(409)795-0792***	E-mail Address ***tjohnson@meridianenergygrou***
Facility Address (Street & No.) ***37th Street***		
City ***Belfield***	State ***ND***	ZIP Code ***58622***
County ***Billings***	Latitude (Nearest Second) ***46°52'45"N***	Longitude (Nearest Second) ***103°14'55" W***
Legal Description of Facility Site ***Property ID 07 0000 00165 000 in the SE 1/4 of Section 2, Twp 139N, Range 100W and Property ID: 07 0000 00162 000 in the NW1/4 and SW 1/4 of Section 1, Twp 139N, Range 100W***	MSL Elevation at Facility ***2,685 feet***	Ref. Datum

SECTION C – EQUIPMENT INFORMATION

Type of Unit or Process (rotary dryer, cupola furnace, crusher, pelletizer, etc.) ***Truck Loading-Unloading System***		
Make ***N/A***	Model ***N/A***	Date Installed ***TBD***
Capacity (manufacturer's or designer's guaranteed maximum) ***TBD***	Operating Capacity (specific units) ***TBD***	
Brief description of operation of unit or process: ***Truck Loading-Unloading Operations, emission point 208TL, equipped with vapor recovery or a dedicated flare for vapor control.***		

SECTION D – NORMAL OPERATING SCHEDULE

Hours Per Day	Days Per Week	Weeks Per Year	Peak Production Season (if any)	Dates of Annual Shutdown
24	***7***	***52***	***N/A***	***N/A***

SECTION E – RAW MATERIALS INTRODUCED INTO UNIT OR PROCESS

Include solid fuels such as coke or coal. *Exclude* indirect heat exchangers from this section
For indirect heat exchangers, complete form SFN 8518

Material	Hourly Process Weight (Pounds Per Hour)			Average Annual (Specify Units)	Intermittent Operation Only (Average Hours Per Week)
	Average	Maximum	Minimum		
Butane	***2,000 bbl***	***2,000 bbl***	***2,000 bbl***	***730,000 bbl***	***N/A***

SECTION F – PRODUCTS OF UNIT OR PROCESS

Include all, even those not usable because they do not meet specifications

Material	Hourly Process Weight (Pounds Per Hour)			Average Annual (Specify Units)	Intermittent Operation Only (Average Hours Per Week)
	Average	Maximum	Minimum		
Gasoline	***7,555 bbl/d***	***7,555 bbl/d***	***7,555 bbl/d***	***2,757,666 bbl***	***N/A***
Jet Fuel	***2,116 bbl/d***	***2,116 bbl/d***	***2,116 bbl/d***	***772,431 bbl***	***N/A***
Diesel	***2,776 bbl/d***	***2,776 bbl/d***	***2,776 bbl/d***	***1,013,149 bbl***	***N/A***

SECTION G – FUELS USED

Coal (Tons/Yr)	% Sulfur	% Ash	Oil (Gal/Yr)	% Sulfur	Grade No.
N/A					

Natural Gas (Thousand CF/Yr)	LP Gas (Gal/Yr)	Other (Specify)
N/A	***N/A***	***N/A***

SECTION H – EMISSION POINTS

List each point separately, number each and locate on attached flow chart

Number	Stack Height (ft)	Stack Diameter (ft at top)	Gas Volume (ACFM)	Exit Temp (°F)	Gas Velocity (fps)
208TL	***N/A***	***N/A***	***N/A***	***N/A***	***N/A***

SECTION I – AIR CONTAMINANTS EMITTED

Known or Suspected - Use same identification number as above

Number	Pollutant	Amount		Basis of Estimate
		Pounds/Hr	Tons/Yr	
208TL	***VOC***	***0.3***	***1.1***	***Emission factors from AP-42 Chapter 5, Table 5.2-5. See Document P-5715043-01-001-18042-I001 "EMISSIONS INVENTORY" and P-5715043-01-001-18035-I001 "BACT Analysis"***

SECTION J – VOLATILE ORGANIC COMPOUNDS

Are any volatile organic compounds (VOCs) stored on premises? ☒ No ☐Yes – List Below See 40 CFR 51.100(s) for classes of compounds covered

Material Stored	Size Tank (Gallons)	Vapor Control Device

SECTION K – ORGANIC SOLVENTS

Are any organic solvents used or produced? ☒ No (None or less than 50 gal/yr) ☐Yes – List Below

Type	Principal Use	Gallons/Yr Consumed	Gallons/Yr Produced

SECTION L – AIR POLLUTION CONTROL EQUIPMENT

Is any air pollution control equipment installed on this unit or process? ☒ No ☐ Yes
If 'Yes' attach form SFN 8532

SECTION M – MATERIAL STORAGE

Does the input material or product from this process contain finely divided material which could become airborne? ☒No ☐Yes

Describe storage methods used:

Storage Piles	Type of Material	Particle Diameter (Avg. or Screen	Pile Size Average Tons	Pile Wetted	Pile Covered

Describe any fugitive dust problems:

Attach additional sheets if needed to explain any answers. Use separate form for each contaminant emitting process

Signature of Applicant	Date
Tom Williams	09/26/2016

SEND COMPLETED APPLICATION AND ALL ATTACHMENTS TO:

North Dakota Department of Health
Division of Air Quality
918 E Divide Ave., 2nd Floor
Bismarck, ND 58501-1947
(701) 328-5188

PERMIT APPLICATION FOR MANUFACTURING OR PROCESSING EQUIPMENT

NORTH DAKOTA DEPARTMENT OF HEALTH
DIVISION OF AIR QUALITY
SFN 8520 (09-12)

SECTION A – GENERAL INFORMATION

Equipment items operating as a functional unit may be grouped as one application		
Name of Firm or Organization ***Meridian Energy Group - Davis Refinery***		
Applicant's Name ***Tom Williams***		
Title ***VP of Planning &Permitting***	Telephone Number ***(707) 299-0182***	E-mail Address ***twilliams@meridianenergygroup.inc***
Mailing Address (Street & No.) ***2062 Business Center Drive, Suite 115***		
City ***Irvine***	State ***CA***	ZIP Code ***92612***

SECTION B - FACILITY INFORMATION

Facility Name ***Davis Refinery***		
ND Air Pollution Control Permit No. (If Applicable) ***N/A***		
Contact Person for Air Pollution Matters ***Tom Johnson***		
Title ***Vice President of Operations***	Telephone Number ***(409)795-0792***	E-mail Address ***tjohnson@meridianenergygrou***
Facility Address (Street & No.) ***37th Street***		
City ***Belfield***	State ***ND***	ZIP Code ***58622***
County ***Billings***	Latitude (Nearest Second) ***46°52'45"N***	Longitude (Nearest Second) ***103°14'55" W***
Legal Description of Facility Site ***Property ID 07 0000 00165 000 in the SE 1/4 of Section 2, Twp 139N, Range 100W and Property ID: 07 0000 00162 000 in the NW1/4 and SW 1/4 of Section 1, Twp 139N, Range 100W***	MSL Elevation at Facility ***2,685 feet***	Ref. Datum

SECTION C – EQUIPMENT INFORMATION

Type of Unit or Process (rotary dryer, cupola furnace, crusher, pelletizer, etc.) ***Wastewater Treatment Plant***		
Make ***N/A***	Model ***N/A***	Date Installed ***TBD***
Capacity (manufacturer's or designer's guaranteed maximum) ***128 gpm***	Operating Capacity (specific units) ***107 gpm***	
Brief description of operation of unit or process: ***Wastewater Treatment Plant - 206WWT (Fugitive), BWON compliant***		

SECTION D – NORMAL OPERATING SCHEDULE

Hours Per Day	Days Per Week	Weeks Per Year	Peak Production Season (if any)	Dates of Annual Shutdown
24	***7***	***52***	***N/A***	***N/A***

SECTION E – RAW MATERIALS INTRODUCED INTO UNIT OR PROCESS

Include solid fuels such as coke or coal. *Exclude* indirect heat exchangers from this section
For indirect heat exchangers, complete form SFN 8518

Material	Hourly Process Weight (Pounds Per Hour)			Average Annual (Specify Units)	Intermittent Operation Only (Average Hours Per Week)
	Average	Maximum	Minimum		
Refinery wastewater (oily effluents)	***71,343.11***	***84,011.51***	***71,343.11***	***107 gpm***	***N/A***

SECTION F – PRODUCTS OF UNIT OR PROCESS

Include all, even those not usable because they do not meet specifications

Material	Hourly Process Weight (Pounds Per Hour)			Average Annual (Specify Units)	Intermittent Operation Only (Average Hours Per Week)
	Average	Maximum	Minimum		
Treated wastewater	***3,075.59***	***3,612.49***	***3,075.59***	***4.61 gpm***	***N/A***

SECTION G – FUELS USED

Coal (Tons/Yr)	% Sulfur	% Ash	Oil (Gal/Yr)	% Sulfur	Grade No.
N/A					

Natural Gas (Thousand CF/Yr)	LP Gas (Gal/Yr)	Other (Specify)
N/A	***N/A***	***N/A***

SECTION H – EMISSION POINTS

List each point separately, number each and locate on attached flow chart

Number	Stack Height (ft)	Stack Diameter (ft at top)	Gas Volume (ACFM)	Exit Temp (°F)	Gas Velocity (fps)
206WWT (Fugitive)	***N/A***	***N/A***	***N/A***	***N/A***	***N/A***

SECTION I – AIR CONTAMINANTS EMITTED

Known or Suspected - Use same identification number as above

Number	Pollutant	Amount		Basis of Estimate
		Pounds/Hr	Tons/Yr	
206WWT (Fugitive)	***VOC***	***2.40***	***10.52***	***Engineering data and * Table 7-8. Table 7-9. and Table 7-10 from the Emissions Estimation Protocol for Petroleum Refineries. See Document P-5715043-01-001-18042-I001 "EMISSIONS INVENTORY" and P-5715043-01-001-18035-I001 "BACT Analysis"***
206WWT (Fugitive)	***HAPs***	***1.2E-01***	***5.24E-01***	

SECTION J – VOLATILE ORGANIC COMPOUNDS

Are any volatile organic compounds (VOCs) stored on premises? ☒ No ☐Yes – List Below See 40 CFR 51.100(s) for classes of compounds covered

Material Stored	Size Tank (Gallons)	Vapor Control Device

SECTION K – ORGANIC SOLVENTS

Are any organic solvents used or produced? ☒ No (None or less than 50 gal/yr) ☐Yes – List Below

Type	Principal Use	Gallons/Yr Consumed	Gallons/Yr Produced

SECTION L – AIR POLLUTION CONTROL EQUIPMENT

Is any air pollution control equipment installed on this unit or process? ☒ No ☐ Yes
If 'Yes' attach form SFN 8532

SECTION M – MATERIAL STORAGE

Does the input material or product from this process contain finely divided material which could become airborne? ☒No ☐Yes

Describe storage methods used:

Storage Piles	Type of Material	Particle Diameter (Avg. or Screen	Pile Size Average Tons	Pile Wetted	Pile Covered

Describe any fugitive dust problems:

Attach additional sheets if needed to explain any answers. Use separate form for each contaminant emitting process

Signature of Applicant	Date
Jon Williams	09/26/2016

SEND COMPLETED APPLICATION AND ALL ATTACHMENTS TO:

North Dakota Department of Health
Division of Air Quality
918 E Divide Ave., 2nd Floor
Bismarck, ND 58501-1947
(701) 328-5188

PERMIT APPLICATION FOR MANUFACTURING OR PROCESSING EQUIPMENT

NORTH DAKOTA DEPARTMENT OF HEALTH
DIVISION OF AIR QUALITY
SFN 8520 (09-12)

SECTION A – GENERAL INFORMATION

Equipment items operating as a functional unit may be grouped as one application		
Name of Firm or Organization ***Meridian Energy Group - Davis Refinery***		
Applicant's Name ***Tom Williams***		
Title ***VP of Planning &Permitting***	Telephone Number ***(707) 299-0182***	E-mail Address ***twilliams@meridianenergygroup.inc***
Mailing Address (Street & No.) ***2062 Business Center Drive, Suite 115***		
City ***Irvine***	State ***CA***	ZIP Code ***92612***

SECTION B - FACILITY INFORMATION

Facility Name ***Davis Refinery***		
ND Air Pollution Control Permit No. (If Applicable) ***N/A***		
Contact Person for Air Pollution Matters ***Tom Johnson***		
Title ***Vice President of Operations***	Telephone Number ***(409)795-0792***	E-mail Address ***tjohnson@meridianenergygrou***
Facility Address (Street & No.) ***37th Street***		
City ***Belfield***	State ***ND***	ZIP Code ***58622***
County ***Billings***	Latitude (Nearest Second) ***46°52'45"N***	Longitude (Nearest Second) ***103°14'55" W***
Legal Description of Facility Site ***Property ID 07 0000 00165 000 in the SE 1/4 of Section 2, Twp 139N, Range 100W and Property ID: 07 0000 00162 000 in the NW1/4 and SW 1/4 of Section 1, Twp 139N, Range 100W***	MSL Elevation at Facility ***2,685 feet***	Ref. Datum

SECTION C – EQUIPMENT INFORMATION

Type of Unit or Process (rotary dryer, cupola furnace, crusher, pelletizer, etc.) ***Cooling Tower A***		
Make ***N/A***	Model ***New Series 3000 - XES3E-1424-07N***	Date Installed ***TBD***
Capacity (manufacturer's or designer's guaranteed maximum) ***1,500 gpm***	Operating Capacity (specific units) ***1,500 gpm***	
Brief description of operation of unit or process: ***Water cooling tower, 1,500 gpm capacity, three cells in total, two operating one on standby, equipped with drift eliminators for a drift rate of 0.005%. Emission point 215-CT-1501A.***		

SECTION D – NORMAL OPERATING SCHEDULE

Hours Per Day	Days Per Week	Weeks Per Year	Peak Production Season (if any)	Dates of Annual Shutdown
24	***7***	***52***	***N/A***	***N/A***

SECTION E – RAW MATERIALS INTRODUCED INTO UNIT OR PROCESS

Include solid fuels such as coke or coal. *Exclude* indirect heat exchangers from this section
For indirect heat exchangers, complete form SFN 8518

Material	Hourly Process Weight (Pounds Per Hour)			Average Annual (Specify Units)	Intermittent Operation Only (Average Hours Per Week)
	Average	Maximum	Minimum		
Warm water from various processes	***750,000***	***750,000***	***750,000***	***788,400,000 gal***	***N/A***

SECTION F – PRODUCTS OF UNIT OR PROCESS

Include all, even those not usable because they do not meet specifications

Material	Hourly Process Weight (Pounds Per Hour)			Average Annual (Specify Units)	Intermittent Operation Only (Average Hours Per Week)
	Average	Maximum	Minimum		
N/A	***N/A***	***N/A***	***N/A***	***N/A***	***N/A***

SECTION G – FUELS USED

Coal (Tons/Yr)	% Sulfur	% Ash	Oil (Gal/Yr)	% Sulfur	Grade No.
N/A					

Natural Gas (Thousand CF/Yr)	LP Gas (Gal/Yr)	Other (Specify)
N/A	***N/A***	***N/A***

SECTION H – EMISSION POINTS

List each point separately, number each and locate on attached flow chart

Number	Stack Height (ft)	Stack Diameter (ft at top)	Gas Volume (ACFM)	Exit Temp (°F)	Gas Velocity (fps)
215-CT-1501A	***12***	***N/A***	***N/A***	***N/A***	***N/A***

SECTION I – AIR CONTAMINANTS EMITTED

Known or Suspected - Use same identification number as above

Number	Pollutant	Amount		Basis of Estimate
		Pounds/Hr	Tons/Yr	
215-CT-1501A	***VOC***	***0.13***	***0.55***	***Engineering data from vendor, and emission factors from Table 8-5 of the Emissions Estimation Protocol for Petroleum Refineries. See Document P-5715043-01-001-18042-I001 "EMISSIONS INVENTORY" and P-5715043-01-001-18035-I001 "BACT Analysis"***
215-CT-1501A	***PM 10***	***0.0012***	***0.01***	

SECTION J – VOLATILE ORGANIC COMPOUNDS

Are any volatile organic compounds (VOCs) stored on premises? ☒ No ☐Yes – List Below See 40 CFR 51.100(s) for classes of compounds covered

Material Stored	Size Tank (Gallons)	Vapor Control Device

SECTION K – ORGANIC SOLVENTS

Are any organic solvents used or produced? ☒ No (None or less than 50 gal/yr) ☐Yes – List Below

Type	Principal Use	Gallons/Yr Consumed	Gallons/Yr Produced

SECTION L – AIR POLLUTION CONTROL EQUIPMENT

Is any air pollution control equipment installed on this unit or process? ☒ No ☐ Yes
If 'Yes' attach form SFN 8532

SECTION M – MATERIAL STORAGE

Does the input material or product from this process contain finely divided material which could become airborne? ☒No ☐Yes

Describe storage methods used:

Storage Piles	Type of Material	Particle Diameter (Avg. or Screen	Pile Size Average Tons	Pile Wetted	Pile Covered

Describe any fugitive dust problems:

Attach additional sheets if needed to explain any answers. Use separate form for each contaminant emitting process

Signature of Applicant	Date
Jon Williams	09/26/2016

SEND COMPLETED APPLICATION AND ALL ATTACHMENTS TO:

North Dakota Department of Health
Division of Air Quality
918 E Divide Ave., 2nd Floor
Bismarck, ND 58501-1947
(701) 328-5188

PERMIT APPLICATION FOR MANUFACTURING OR PROCESSING EQUIPMENT

NORTH DAKOTA DEPARTMENT OF HEALTH
DIVISION OF AIR QUALITY
SFN 8520 (09-12)

SECTION A – GENERAL INFORMATION

Equipment items operating as a functional unit may be grouped as one application		
Name of Firm or Organization ***Meridian Energy Group - Davis Refinery***		
Applicant's Name ***Tom Williams***		
Title ***VP of Planning &Permitting***	Telephone Number ***(707) 299-0182***	E-mail Address ***twilliams@meridianenergygroup.inc***
Mailing Address (Street & No.) ***2062 Business Center Drive, Suite 115***		
City ***Irvine***	State ***CA***	ZIP Code ***92612***

SECTION B - FACILITY INFORMATION

Facility Name ***Davis Refinery***		
ND Air Pollution Control Permit No. (If Applicable) ***N/A***		
Contact Person for Air Pollution Matters ***Tom Johnson***		
Title ***Vice President of Operations***	Telephone Number ***(409)795-0792***	E-mail Address ***tjohnson@meridianenergygrou***
Facility Address (Street & No.) ***37th Street***		
City ***Belfield***	State ***ND***	ZIP Code ***58622***
County ***Billings***	Latitude (Nearest Second) ***46°52'45"N***	Longitude (Nearest Second) ***103°14'55" W***
Legal Description of Facility Site ***Property ID 07 0000 00165 000 in the SE 1/4 of Section 2, Twp 139N, Range 100W and Property ID: 07 0000 00162 000 in the NW1/4 and SW 1/4 of Section 1, Twp 139N, Range 100W***	MSL Elevation at Facility ***2,685 feet***	Ref. Datum

SECTION C – EQUIPMENT INFORMATION

Type of Unit or Process (rotary dryer, cupola furnace, crusher, pelletizer, etc.) ***Cooling Tower A***		
Make ***N/A***	Model ***New Series 3000 - XES3E-1424-07N***	Date Installed ***TBD***
Capacity (manufacturer's or designer's guaranteed maximum) ***1,500 gpm***	Operating Capacity (specific units) ***1,500 gpm***	
Brief description of operation of unit or process: ***Water cooling tower, 1,500 gpm capacity, three cells in total, two operating one on standby, equipped with drift eliminators for a drift rate of 0.005%. Emission point 215-CT-1501B.***		

SECTION D – NORMAL OPERATING SCHEDULE

Hours Per Day	Days Per Week	Weeks Per Year	Peak Production Season (if any)	Dates of Annual Shutdown
24	***7***	***52***	***N/A***	***N/A***

SECTION E – RAW MATERIALS INTRODUCED INTO UNIT OR PROCESS

Include solid fuels such as coke or coal. *Exclude* indirect heat exchangers from this section
For indirect heat exchangers, complete form SFN 8518

Material	Hourly Process Weight (Pounds Per Hour)			Average Annual (Specify Units)	Intermittent Operation Only (Average Hours Per Week)
	Average	Maximum	Minimum		
Warm water from various processes	***750,000***	***750,000***	***750,000***	***788,400,000 gal***	***N/A***

SECTION F – PRODUCTS OF UNIT OR PROCESS

Include all, even those not usable because they do not meet specifications

Material	Hourly Process Weight (Pounds Per Hour)			Average Annual (Specify Units)	Intermittent Operation Only (Average Hours Per Week)
	Average	Maximum	Minimum		
N/A	***N/A***	***N/A***	***N/A***	***N/A***	***N/A***

SECTION G – FUELS USED

Coal (Tons/Yr)	% Sulfur	% Ash	Oil (Gal/Yr)	% Sulfur	Grade No.
N/A					

Natural Gas (Thousand CF/Yr)	LP Gas (Gal/Yr)	Other (Specify)
N/A	***N/A***	***N/A***

SECTION H – EMISSION POINTS

List each point separately, number each and locate on attached flow chart

Number	Stack Height (ft)	Stack Diameter (ft at top)	Gas Volume (ACFM)	Exit Temp (°F)	Gas Velocity (fps)
215-CT-1501B	***12***	***N/A***	***N/A***	***N/A***	***N/A***

SECTION I – AIR CONTAMINANTS EMITTED

Known or Suspected - Use same identification number as above

Number	Pollutant	Amount		Basis of Estimate
		Pounds/Hr	Tons/Yr	
215-CT-1501B	***VOC***	***0.13***	***0.55***	***Engineering data from vendor, and emission factors from Table 8-5 of the Emissions Estimation Protocol for Petroleum Refineries. See Document P-5715043-01-001-18042-I001 "EMISSIONS INVENTORY" and P-5715043-01-001-18035-I001 "BACT Analysis"***
215-CT-1501B	***PM 10***	***0.0012***	***0.01***	

SECTION J – VOLATILE ORGANIC COMPOUNDS

Are any volatile organic compounds (VOCs) stored on premises? ☒ No ☐Yes – List Below See 40 CFR 51.100(s) for classes of compounds covered

Material Stored	Size Tank (Gallons)	Vapor Control Device

SECTION K – ORGANIC SOLVENTS

Are any organic solvents used or produced? ☒ No (None or less than 50 gal/yr) ☐Yes – List Below

Type	Principal Use	Gallons/Yr Consumed	Gallons/Yr Produced

SECTION L – AIR POLLUTION CONTROL EQUIPMENT

Is any air pollution control equipment installed on this unit or process? ☒ No ☐ Yes
If 'Yes' attach form SFN 8532

SECTION M – MATERIAL STORAGE

Does the input material or product from this process contain finely divided material which could become airborne? ☒No ☐Yes

Describe storage methods used:

Storage Piles	Type of Material	Particle Diameter (Avg. or Screen	Pile Size Average Tons	Pile Wetted	Pile Covered

Describe any fugitive dust problems:

Attach additional sheets if needed to explain any answers. Use separate form for each contaminant emitting process

Signature of Applicant	Date
Jon Wilson	09/26/2016

SEND COMPLETED APPLICATION AND ALL ATTACHMENTS TO:

North Dakota Department of Health
Division of Air Quality
918 E Divide Ave., 2nd Floor
Bismarck, ND 58501-1947
(701) 328-5188

PERMIT APPLICATION FOR MANUFACTURING OR PROCESSING EQUIPMENT

NORTH DAKOTA DEPARTMENT OF HEALTH
DIVISION OF AIR QUALITY
SFN 8520 (09-12)

SECTION A – GENERAL INFORMATION

Equipment items operating as a functional unit may be grouped as one application		
Name of Firm or Organization ***Meridian Energy Group - Davis Refinery***		
Applicant's Name ***Tom Williams***		
Title ***VP of Planning &Permitting***	Telephone Number ***(707) 299-0182***	E-mail Address ***twilliams@meridianenergygroup.inc***
Mailing Address (Street & No.) ***2062 Business Center Drive, Suite 115***		
City ***Irvine***	State ***CA***	ZIP Code ***92612***

SECTION B - FACILITY INFORMATION

Facility Name ***Davis Refinery***		
ND Air Pollution Control Permit No. (If Applicable) ***N/A***		
Contact Person for Air Pollution Matters ***Tom Johnson***		
Title ***Vice President of Operations***	Telephone Number ***(409)795-0792***	E-mail Address ***tjohnson@meridianenergygrou***
Facility Address (Street & No.) ***37th Street***		
City ***Belfield***	State ***ND***	ZIP Code ***58622***
County ***Billings***	Latitude (Nearest Second) ***46°52'45"N***	Longitude (Nearest Second) ***103°14'55" W***
Legal Description of Facility Site ***Property ID 07 0000 00165 000 in the SE 1/4 of Section 2, Twp 139N, Range 100W and Property ID: 07 0000 00162 000 in the NW1/4 and SW 1/4 of Section 1, Twp 139N, Range 100W***	MSL Elevation at Facility ***2,685 feet***	Ref. Datum

SECTION C – EQUIPMENT INFORMATION

Type of Unit or Process (rotary dryer, cupola furnace, crusher, pelletizer, etc.) ***Cooling Tower A***		
Make ***N/A***	Model ***New Series 3000 - XES3E-1424-07N***	Date Installed ***TBD***
Capacity (manufacturer's or designer's guaranteed maximum) ***1,500 gpm***	Operating Capacity (specific units) ***1,500 gpm***	
Brief description of operation of unit or process: ***Water cooling tower, 1,500 gpm capacity, three cells in total, two operating one on standby, equipped with drift eliminators for a drift rate of 0.005%. Emission point 215-CT-1501C.***		

SECTION D – NORMAL OPERATING SCHEDULE

Hours Per Day	Days Per Week	Weeks Per Year	Peak Production Season (if any)	Dates of Annual Shutdown
24	***7***	***52***	***N/A***	***N/A***

SECTION E – RAW MATERIALS INTRODUCED INTO UNIT OR PROCESS

Include solid fuels such as coke or coal. *Exclude* indirect heat exchangers from this section
For indirect heat exchangers, complete form SFN 8518

Material	Hourly Process Weight (Pounds Per Hour)			Average Annual (Specify Units)	Intermittent Operation Only (Average Hours Per Week)
	Average	Maximum	Minimum		
Warm water from various processes	***750,000***	***750,000***	***750,000***	***788,400,000 gal***	***N/A***

SECTION F – PRODUCTS OF UNIT OR PROCESS

Include all, even those not usable because they do not meet specifications

Material	Hourly Process Weight (Pounds Per Hour)			Average Annual (Specify Units)	Intermittent Operation Only (Average Hours Per Week)
	Average	Maximum	Minimum		
N/A	***N/A***	***N/A***	***N/A***	***N/A***	***N/A***

SECTION G – FUELS USED

Coal (Tons/Yr)	% Sulfur	% Ash	Oil (Gal/Yr)	% Sulfur	Grade No.
N/A					

Natural Gas (Thousand CF/Yr)	LP Gas (Gal/Yr)	Other (Specify)
N/A	***N/A***	***N/A***

SECTION H – EMISSION POINTS

List each point separately, number each and locate on attached flow chart

Number	Stack Height (ft)	Stack Diameter (ft at top)	Gas Volume (ACFM)	Exit Temp (°F)	Gas Velocity (fps)
215-CT-1501C	***12***	***N/A***	***N/A***	***N/A***	***N/A***

SECTION I – AIR CONTAMINANTS EMITTED

Known or Suspected - Use same identification number as above

Number	Pollutant	Amount		Basis of Estimate
		Pounds/Hr	Tons/Yr	
215-CT-1501C	***VOC***	***0.13***	***0.55***	***Engineering data from vendor, and emission factors from Table 8-5 of the Emissions Estimation Protocol for Petroleum Refineries. See Document P-5715043-01-001-18042-I001 "EMISSIONS INVENTORY" and P-5715043-01-001-18035-I001 "BACT Analysis"***
215-CT-1501C	***PM 10***	***0.0012***	***0.01***	

SECTION J – VOLATILE ORGANIC COMPOUNDS

Are any volatile organic compounds (VOCs) stored on premises? ☒ No ☐Yes – List Below See 40 CFR 51.100(s) for classes of compounds covered

Material Stored	Size Tank (Gallons)	Vapor Control Device

SECTION K – ORGANIC SOLVENTS

Are any organic solvents used or produced? ☒ No (None or less than 50 gal/yr) ☐Yes – List Below

Type	Principal Use	Gallons/Yr Consumed	Gallons/Yr Produced

SECTION L – AIR POLLUTION CONTROL EQUIPMENT

Is any air pollution control equipment installed on this unit or process? ☒ No ☐ Yes
If 'Yes' attach form SFN 8532

SECTION M – MATERIAL STORAGE

Does the input material or product from this process contain finely divided material which could become airborne? ☒No ☐Yes

Describe storage methods used:

Storage Piles	Type of Material	Particle Diameter (Avg. or Screen	Pile Size Average Tons	Pile Wetted	Pile Covered

Describe any fugitive dust problems:

Attach additional sheets if needed to explain any answers. Use separate form for each contaminant emitting process

Signature of Applicant	Date
Jon Williams	09/26/2016

SEND COMPLETED APPLICATION AND ALL ATTACHMENTS TO:

North Dakota Department of Health
Division of Air Quality
918 E Divide Ave., 2nd Floor
Bismarck, ND 58501-1947
(701) 328-5188

PERMIT APPLICATION FOR
FUEL BURNING EQUIPMENT FOR INDIRECT HEATING

NORTH DAKOTA DEPARTMENT OF HEALTH
DIVISION OF AIR QUALITY
SFN 8518 (09-12)

SECTION A – FACILITY INFORMATION

Name of Firm or Organization ***Meridian Energy Group – Davis Refinery***		
Contact Person for Air Pollution Matters ***Tom Johnson***		
Title ***Vice President of Operations***	Telephone Number ***(409)795-0792***	E-mail Address ***tjohnson@meridianenergygroup.inc***
Applicant´s Name ***Tom Williams***		
Title ***VP of Planning & Permitting***	Telephone Number ***(707) 299-0182***	E-mail Address ***twilliams@meridianenergygroup.inc***
Mailing Address (Street & No.) ***2062 Business Center Drive, Suite 115***		
City ***Irvine***	State ***CA***	ZIP Code ***92612***
Facility Address (Street & No.) ***37th Street***		
City ***Belfield***	State ***ND***	ZIP Code ***58622***

County ***Billings***	Latitude (Nearest Second) ***46°52'45"N***	Longitude (Nearest Second) ***103°14'55" W***

Legal Description of Facility Site ***Property ID 07 0000 00165 000 in the SE 1/4 of Section 2, Twp 139N, Range 100W and Property ID: 07 0000 00162 000 in the NW1/4 and SW 1/4 of Section 1, Twp 139N, Range 100W***	Land Area at Facility Site ***261 Acres***	MSL Elevation at Facility ***2,685 feet***

SECTION B – EQUIPMENT

Source ID No. (From form SFN 8516) ***101-H-0101***	Name of Manufacturer ***TBD***
Rated Capacity/Maximum Input ***TBD***	Model Number ***TBD***
Purpose Space Heat _____% Process Heat ***100***%	Power Generation _____% Other (Specify % if Multi Purpose) _____%

SECTION C – TYPE OF COMBUSTION UNIT AND FUEL FEEDING METHOD

Coal (If other solid fuel, specify here) ☐Pulverized ☐General ☐Dry Bottom ☐Wet Bottom with Fly Ash Reinjection ☐Wet Bottom without Fly Ash Reinjection ☐Other – Specify:	☐Spreader Stoker with Fly Ash Reinjection ☐Spreader Stoker without Fly Ash Reinjection ☐Fluidized Bed ☐Cyclone ☐Hand-Fired
Fuel Oil ☐Horizontally Fired ☐Tangentially Fired ☐Other – Specify:	Gas ☐Horizontally Fired ☐Tangentially Fired ☐Other – Specify: ***TBD***

SECTION D – NORMAL SCHEDULE OF OPERATION

Hours Per Day	Days Per Week	Weeks Per Year	Hours Per Year Total	Peak Season (Specify Months)
24	***7***	***52***	***8760***	***N/A***

SECTION E – FUEL USE EXPECTED IN A CALENDAR YEAR

Year ***2017-2018***					
Primary Fuels			Standby Fuels		
Type ***Fuel Gas***			Type ***none***		
Quantity Per Year ***22,869,732***	Units of Measure ***lb/yr***		Quantity Per Year	Units of Measure	
Percent Ash (Solid Fuels Only)					
Minimum	Maximum	Average	Minimum	Maximum	Average
Percent Sulfur					
Minimum ***0***	Maximum ***0***	Average ***0***	Minimum	Maximum	Average
Btu Per Unit of Measure (e.g. lb, gal, etc. - Specify)					
Minimum ***TBD***	Maximum ***TBD***	Average ***27,578.81***	Minimum	Maximum	Average
Describe Fuel Transport and Storage Methods: ***N/A, fuel gas to be generated within the refinery***					

SECTION F – COMBUSTION AIR

☐Natural Draft ☐Induced ☐Forced ☐Other – Specify: ***TBD***

SECTION G – STACK DATA

Inside Diameter (ft) ***6.3***	Height Above Grade (ft) ***127.6***
Gas Temperature at Exit (Avg. °F) ***787.7***	Gas Velocity at Exit (Avg. ft/sec) ***20.1***
Are Emission Control Devices in Place? If YES – Complete SFN 8532 ☒ Yes ☐No	
Stack Exit Gas Flow Rate	
Average (ACFM) ***37,427.14***	Average (DSCFM) ***TBD***
Maximum (ACFM) ***TBD***	Maximum (DSCFM) ***TBD***
Are sampling ports available? ☐No ☒ Yes – Describe:	

SECTION H – NEARBY BUILDINGS

Attach drawings which show the plan and elevation views of any nearby buildings including the building that houses the fuel-fired equipment.
Plant layout drawings attached to this permit application.

SECTION I – AIR CONTAMINANTS EMITTED

Pollutant	Maximum Pounds Per Hour	Tons Per Year
PM_{10} Total	***2,88E-01***	***1,26E+00***
PM_{10} Filterable	***7,20E-02***	***3,15E-01***
$PM_{2.5}$ Total	***2,88E-01***	***1,26E+00***
$PM_{2.5}$ Filterable	***7,20E-02***	***3,15E-01***
$PM_{2.5}$ Condensable	***2,16E-01***	***9,46E-01***
Sulfur Dioxide	***4,24E-02***	***1,86E-01***
Nitrogen Oxides	***4,54E-01***	***1,99E+00***
Carbon Monoxide	***2,02E+00***	***8,83E+00***
Greenhouse Gases (CO2e)	***N/A***	
Other – Specify		
Lead	***3,53E-05***	***1,55E-04***
Metal HAP (Total)	***5,26E-04***	***2,31E-03***
Organic HAPs (Total)	***3,52E-02***	***1,54E-01***
VOC	***3,88E-01***	***1,70E+00***

Basis and Calculations for Quantities:
Engineering data and Emission factors from Table 1.4-2. AP 42, Chapter 1: External Combustion Sources. See Document P-5715043-01-001-18042-I001 "EMISSIONS INVENTORY" and P-5715043-01-001-18035-I001 "BACT Analysis"

Signature of Applicant	Date
Jon Wilkins	9/26/2016

SEND COMPLETED APPLICATION AND ALL ATTACHMENTS TO:

North Dakota Department of Health
Division of Air Quality
918 E Divide Ave., 2nd Floor
Bismarck, ND 58501-1947
(701) 328-5188

PERMIT APPLICATION FOR
FUEL BURNING EQUIPMENT FOR INDIRECT HEATING

NORTH DAKOTA DEPARTMENT OF HEALTH
DIVISION OF AIR QUALITY
SFN 8518 (09-12)

SECTION A – FACILITY INFORMATION

Name of Firm or Organization ***Meridian Energy Group – Davis Refinery***		
Contact Person for Air Pollution Matters ***Tom Johnson***		
Title ***Vice President of Operations***	Telephone Number ***(409)795-0792***	E-mail Address ***tjohnson@meridianenergygroup.inc***
Applicant´s Name ***Tom Williams***		
Title ***VP of Planning & Permitting***	Telephone Number ***(707) 299-0182***	E-mail Address ***twilliams@meridianenergygroup.inc***
Mailing Address (Street & No.) ***2062 Business Center Drive, Suite 115***		
City ***Irvine***	State ***CA***	ZIP Code ***92612***
Facility Address (Street & No.) ***37th Street***		
City ***Belfield***	State ***ND***	ZIP Code ***58622***

County ***Billings***	Latitude (Nearest Second) ***46°52'45"N***	Longitude (Nearest Second) ***103°14'55" W***

Legal Description of Facility Site ***Property ID 07 0000 00165 000 in the SE 1/4 of Section 2, Twp 139N, Range 100W and Property ID: 07 0000 00162 000 in the NW1/4 and SW 1/4 of Section 1, Twp 139N, Range 100W***	Land Area at Facility Site ***261 Acres***	MSL Elevation at Facility ***2,685 feet***

SECTION B – EQUIPMENT

Source ID No. (From form SFN 8516) ***102-H-0201***	Name of Manufacturer ***TBD***
Rated Capacity/Maximum Input ***TBD***	Model Number ***TBD***
Purpose Space Heat _____% Process Heat ***100***%	Power Generation _____% Other (Specify % if Multi Purpose) _____%

SECTION C – TYPE OF COMBUSTION UNIT AND FUEL FEEDING METHOD

Coal (If other solid fuel, specify here) ☐Pulverized ☐General ☐Dry Bottom ☐Wet Bottom with Fly Ash Reinjection ☐Wet Bottom without Fly Ash Reinjection ☐Other – Specify:	☐Spreader Stoker with Fly Ash Reinjection ☐Spreader Stoker without Fly Ash Reinjection ☐Fluidized Bed ☐Cyclone ☐Hand-Fired
Fuel Oil ☐Horizontally Fired ☐Tangentially Fired ☐Other – Specify:	Gas ☐Horizontally Fired ☐Tangentially Fired ☐Other – Specify: ***TBD***

SECTION D – NORMAL SCHEDULE OF OPERATION

Hours Per Day	Days Per Week	Weeks Per Year	Hours Per Year Total	Peak Season (Specify Months)
24	***7***	***52***	***8760***	***N/A***

SECTION E – FUEL USE EXPECTED IN A CALENDAR YEAR

Year ***2017-2018***					
Primary Fuels			Standby Fuels		
Type ***Fuel Gas***			Type ***none***		
Quantity Per Year ***22,869,732***	Units of Measure ***lb/yr***		Quantity Per Year	Units of Measure	
Percent Ash (Solid Fuels Only)					
Minimum	Maximum	Average	Minimum	Maximum	Average
Percent Sulfur					
Minimum ***0***	Maximum ***0***	Average ***0***	Minimum	Maximum	Average
Btu Per Unit of Measure (e.g. lb, gal, etc. - Specify)					
Minimum ***TBD***	Maximum ***TBD***	Average ***27,578.81***	Minimum	Maximum	Average
Describe Fuel Transport and Storage Methods: ***N/A, fuel gas to be generated within the refinery***					

SECTION F – COMBUSTION AIR

☐Natural Draft ☐Induced ☐Forced ☐Other – Specify: ***TBD***

SECTION G – STACK DATA

Inside Diameter (ft) ***6.3***	Height Above Grade (ft) ***127.6***
Gas Temperature at Exit (Avg. °F) ***787.7***	Gas Velocity at Exit (Avg. ft/sec) ***20.1***
Are Emission Control Devices in Place? If YES – Complete SFN 8532 ☒ Yes ☐No	
Stack Exit Gas Flow Rate	
Average (ACFM) ***37,427.14***	Average (DSCFM) ***TBD***
Maximum (ACFM) ***TBD***	Maximum (DSCFM) ***TBD***
Are sampling ports available? ☐No ☒ Yes – Describe:	

SECTION H – NEARBY BUILDINGS

Attach drawings which show the plan and elevation views of any nearby buildings including the building that houses the fuel-fired equipment.
Plant layout drawings attached to this permit application.

SECTION I – AIR CONTAMINANTS EMITTED

Pollutant	Maximum Pounds Per Hour	Tons Per Year
PM_{10} Total	***2,88E-01***	***1,26E+00***
PM_{10} Filterable	***7,20E-02***	***3,15E-01***
$PM_{2.5}$ Total	***2,88E-01***	***1,26E+00***
$PM_{2.5}$ Filterable	***7,20E-02***	***3,15E-01***
$PM_{2.5}$ Condensable	***2,16E-01***	***9,46E-01***
Sulfur Dioxide	***4,24E-02***	***1,86E-01***
Nitrogen Oxides	***4,54E-01***	***1,99E+00***
Carbon Monoxide	***2,02E+00***	***8,83E+00***
Greenhouse Gases (CO2e)	***N/A***	
Other – Specify		
Lead	***3,53E-05***	***1,55E-04***
Metal HAP (Total)	***5,26E-04***	***2,31E-03***
Organic HAPs (Total)	***3,52E-02***	***1,54E-01***
VOC	***3,88E-01***	***1,70E+00***

Basis and Calculations for Quantities:
Engineering data and Emission factors from Table 1.4-2. AP 42, Chapter 1: External Combustion Sources. See Document P-5715043-01-001-18042-I001 "EMISSIONS INVENTORY" and P-5715043-01-001-18035-I001 "BACT Analysis"

Signature of Applicant	Date
Jon Wilkins	9/26/2016

SEND COMPLETED APPLICATION AND ALL ATTACHMENTS TO:

North Dakota Department of Health
Division of Air Quality
918 E Divide Ave., 2nd Floor
Bismarck, ND 58501-1947
(701) 328-5188

PERMIT APPLICATION FOR
FUEL BURNING EQUIPMENT FOR INDIRECT HEATING

NORTH DAKOTA DEPARTMENT OF HEALTH
DIVISION OF AIR QUALITY
SFN 8518 (09-12)

SECTION A – FACILITY INFORMATION

Name of Firm or Organization ***Meridian Energy Group – Davis Refinery***		
Contact Person for Air Pollution Matters ***Tom Johnson***		
Title ***Vice President of Operations***	Telephone Number ***(409)795-0792***	E-mail Address ***tjohnson@meridianenergygroup.inc***
Applicant´s Name ***Tom Williams***		
Title ***VP of Planning & Permitting***	Telephone Number ***(707) 299-0182***	E-mail Address ***twilliams@meridianenergygroup.inc***
Mailing Address (Street & No.) ***2062 Business Center Drive, Suite 115***		
City ***Irvine***	State ***CA***	ZIP Code ***92612***
Facility Address (Street & No.) ***37th Street***		
City ***Belfield***	State ***ND***	ZIP Code ***58622***

County ***Billings***	Latitude (Nearest Second) ***46°52'45"N***	Longitude (Nearest Second) ***103°14'55" W***

Legal Description of Facility Site ***Property ID 07 0000 00165 000 in the SE 1/4 of Section 2, Twp 139N, Range 100W and Property ID: 07 0000 00162 000 in the NW1/4 and SW 1/4 of Section 1, Twp 139N, Range 100W***	Land Area at Facility Site ***261 Acres***	MSL Elevation at Facility ***2,685 feet***

SECTION B – EQUIPMENT

Source ID No. (From form SFN 8516) ***103-H-0301***	Name of Manufacturer ***TBD***
Rated Capacity/Maximum Input ***TBD***	Model Number ***TBD***
Purpose Space Heat _____% Process Heat ***100***%	Power Generation _____% Other (Specify % if Multi Purpose) _____%

SECTION C – TYPE OF COMBUSTION UNIT AND FUEL FEEDING METHOD

Coal (If other solid fuel, specify here) ☐Pulverized ☐General ☐Dry Bottom ☐Wet Bottom with Fly Ash Reinjection ☐Wet Bottom without Fly Ash Reinjection ☐Other – Specify:	☐Spreader Stoker with Fly Ash Reinjection ☐Spreader Stoker without Fly Ash Reinjection ☐Fluidized Bed ☐Cyclone ☐Hand-Fired
Fuel Oil ☐Horizontally Fired ☐Tangentially Fired ☐Other – Specify:	Gas ☐Horizontally Fired ☐Tangentially Fired ☐Other – Specify: ***TBD***

SECTION D – NORMAL SCHEDULE OF OPERATION

Hours Per Day	Days Per Week	Weeks Per Year	Hours Per Year Total	Peak Season (Specify Months)
24	***7***	***52***	***8760***	***N/A***

SECTION E – FUEL USE EXPECTED IN A CALENDAR YEAR

Year ***2017-2018***					
Primary Fuels			Standby Fuels		
Type ***Fuel Gas***			Type ***None***		
Quantity Per Year ***24,295,860***	Units of Measure ***lb/yr***		Quantity Per Year	Units of Measure	
Percent Ash (Solid Fuels Only)					
Minimum	Maximum	Average	Minimum	Maximum	Average
Percent Sulfur					
Minimum ***0***	Maximum ***0***	Average ***0***	Minimum	Maximum	Average
Btu Per Unit of Measure (e.g. lb, gal, etc. - Specify)					
Minimum ***TBD***	Maximum ***TBD***	Average ***27,571.66***	Minimum	Maximum	Average
Describe Fuel Transport and Storage Methods: ***N/A, fuel gas to be generated within the refinery***					

SECTION F – COMBUSTION AIR

☐Natural Draft ☐Induced ☐Forced ☐Other – Specify: ***TBD***

SECTION G – STACK DATA

Inside Diameter (ft) ***6.5***	Height Above Grade (ft) ***125***
Gas Temperature at Exit (Avg. °F) ***600.4***	Gas Velocity at Exit (Avg. ft/sec) ***16.9***
Are Emission Control Devices in Place? If YES – Complete SFN 8532 ☒ Yes ☐No	
Stack Exit Gas Flow Rate	
Average (ACFM) ***33,610.60***	Average (DSCFM) ***TBD***
Maximum (ACFM) ***TBD***	Maximum (DSCFM) ***TBD***
Are sampling ports available? ☐No ☒ Yes – Describe:	

SECTION H – NEARBY BUILDINGS

Attach drawings which show the plan and elevation views of any nearby buildings including the building that houses the fuel-fired equipment.
Plant layout drawings attached to this permit application.

SECTION I – AIR CONTAMINANTS EMITTED

Pollutant	Maximum Pounds Per Hour	Tons Per Year
PM_{10} Total	***3,06E-01***	***1,34E+00***
PM_{10} Filterable	***7,65E-02***	***3,35E-01***
$PM_{2.5}$ Total	***3,06E-01***	***1,34E+00***
$PM_{2.5}$ Filterable	***7,65E-02***	***3,35E-01***
$PM_{2.5}$ Condensable	***2,29E-01***	***1,00E+00***
Sulfur Dioxide	***4,50E-02***	***1,97E-01***
Nitrogen Oxides	***4,82E-01***	***2,11E+00***
Carbon Monoxide	***2,14E+00***	***9,38E+00***
Greenhouse Gases (CO2e)	***N/A***	
Other – Specify		
Lead	***3,75E-05***	***1,64E-04***
Metal HAP (Total)	***5,59E-04***	***2,45E-03***
Organic HAPs (Total)	***3,74E-02***	***1,64E-01***
VOC	***4,12E-01***	***1,81E+00***

Basis and Calculations for Quantities:
Engineering data and Emission factors from Table 1.4-2. AP 42, Chapter 1: External Combustion Sources. See Document P-5715043-01-001-18042-I001 "EMISSIONS INVENTORY" and P-5715043-01-001-18035-I001 "BACT Analysis"

Signature of Applicant	Date
Tom Wilson	09/26/2016

SEND COMPLETED APPLICATION AND ALL ATTACHMENTS TO:

North Dakota Department of Health
Division of Air Quality
918 E Divide Ave., 2nd Floor
Bismarck, ND 58501-1947
(701) 328-5188

PERMIT APPLICATION FOR
FUEL BURNING EQUIPMENT FOR INDIRECT HEATING

NORTH DAKOTA DEPARTMENT OF HEALTH
DIVISION OF AIR QUALITY
SFN 8518 (09-12)

SECTION A – FACILITY INFORMATION

Name of Firm or Organization ***Meridian Energy Group – Davis Refinery***		
Contact Person for Air Pollution Matters ***Tom Johnson***		
Title ***Vice President of Operations***	Telephone Number ***(409)795-0792***	E-mail Address ***tjohnson@meridianenergygroup.inc***
Applicant´s Name ***Tom Williams***		
Title ***VP of Planning & Permitting***	Telephone Number ***(707) 299-0182***	E-mail Address ***twilliams@meridianenergygroup.inc***
Mailing Address (Street & No.) ***2062 Business Center Drive, Suite 115***		
City ***Irvine***	State ***CA***	ZIP Code ***92612***
Facility Address (Street & No.) ***37th Street***		
City ***Belfield***	State ***ND***	ZIP Code ***58622***

County ***Billings***	Latitude (Nearest Second) ***46°52'45"N***	Longitude (Nearest Second) ***103°14'55" W***

Legal Description of Facility Site ***Property ID 07 0000 00165 000 in the SE 1/4 of Section 2, Twp 139N, Range 100W and Property ID: 07 0000 00162 000 in the NW1/4 and SW 1/4 of Section 1, Twp 139N, Range 100W***	Land Area at Facility Site ***261 Acres***	MSL Elevation at Facility ***2,685 feet***

SECTION B – EQUIPMENT

Source ID No. (From form SFN 8516) ***103-H-0302***	Name of Manufacturer ***TBD***
Rated Capacity/Maximum Input ***TBD***	Model Number ***TBD***
Purpose Space Heat _____% Process Heat ***100***%	Power Generation _____% Other (Specify % if Multi Purpose) _____%

SECTION C – TYPE OF COMBUSTION UNIT AND FUEL FEEDING METHOD

Coal (If other solid fuel, specify here) ☐Pulverized ☐General ☐Dry Bottom ☐Wet Bottom with Fly Ash Reinjection ☐Wet Bottom without Fly Ash Reinjection ☐Other – Specify:	☐Spreader Stoker with Fly Ash Reinjection ☐Spreader Stoker without Fly Ash Reinjection ☐Fluidized Bed ☐Cyclone ☐Hand-Fired
Fuel Oil ☐Horizontally Fired ☐Tangentially Fired ☐Other – Specify:	Gas ☐Horizontally Fired ☐Tangentially Fired ☐Other – Specify: ***TBD***

SECTION D – NORMAL SCHEDULE OF OPERATION

Hours Per Day	Days Per Week	Weeks Per Year	Hours Per Year Total	Peak Season (Specify Months)
24	***7***	***52***	***8760***	***N/A***

SECTION E – FUEL USE EXPECTED IN A CALENDAR YEAR

Year ***2017-2018***					
Primary Fuels			Standby Fuels		
Type ***Fuel Gas***			Type ***None***		
Quantity Per Year ***18,313,656***	Units of Measure ***lb/yr***		Quantity Per Year	Units of Measure	
Percent Ash (Solid Fuels Only)					
Minimum	Maximum	Average	Minimum	Maximum	Average
Percent Sulfur					
Minimum ***0***	Maximum ***0***	Average ***0***	Minimum	Maximum	Average
Btu Per Unit of Measure (e.g. lb, gal, etc. - Specify)					
Minimum ***TBD***	Maximum ***TBD***	Average ***27,575.82***	Minimum	Maximum	Average
Describe Fuel Transport and Storage Methods: ***N/A, fuel gas to be generated within the refinery***					

SECTION F – COMBUSTION AIR

☐Natural Draft ☐Induced ☐Forced ☐Other – Specify: ***TBD***

SECTION G – STACK DATA

Inside Diameter (ft) ***5.1***	Height Above Grade (ft) ***120***
Gas Temperature at Exit (Avg. °F) ***600.1***	Gas Velocity at Exit (Avg. ft/sec) ***20.8***
Are Emission Control Devices in Place? If YES – Complete SFN 8532 ☒ Yes ☐No	
Stack Exit Gas Flow Rate	
Average (ACFM) ***25,334.29***	Average (DSCFM) ***TBD***
Maximum (ACFM) ***TBD***	Maximum (DSCFM) ***TBD***
Are sampling ports available? ☐No ☒ Yes – Describe:	

SECTION H – NEARBY BUILDINGS

Attach drawings which show the plan and elevation views of any nearby buildings including the building that houses the fuel-fired equipment.
Plant layout drawings attached to this permit application.

SECTION I – AIR CONTAMINANTS EMITTED

Pollutant	Maximum Pounds Per Hour	Tons Per Year
PM_{10} Total	***2,31E-01***	***1,01E+00***
PM_{10} Filterable	***5,77E-02***	***2,53E-01***
$PM_{2.5}$ Total	***2,31E-01***	***1,01E+00***
$PM_{2.5}$ Filterable	***5,77E-02***	***2,53E-01***
$PM_{2.5}$ Condensable	***1,73E-01***	***7,58E-01***
Sulfur Dioxide	***3,39E-02***	***1,49E-01***
Nitrogen Oxides	***3,63E-01***	***1,59E+00***
Carbon Monoxide	***1,61E+00***	***7,07E+00***
Greenhouse Gases (CO2e)	***N/A***	
Other – Specify		
Lead	***2,82E-05***	***1,24E-04***
Metal HAP (Total)	***4,22E-04***	***1,85E-03***
Organic HAPs (Total)	***2,82E-02***	***1,23E-01***
VOC	***3,11E-01***	***1,36E+00***

Basis and Calculations for Quantities:
Engineering data and Emission factors from Table 1.4-2. AP 42, Chapter 1: External Combustion Sources. See Document P-5715043-01-001-18042-I001 "EMISSIONS INVENTORY" and P-5715043-01-001-18035-I001 "BACT Analysis"

Signature of Applicant	Date
	09/26/2016

SEND COMPLETED APPLICATION AND ALL ATTACHMENTS TO:

North Dakota Department of Health
Division of Air Quality
918 E Divide Ave., 2nd Floor
Bismarck, ND 58501-1947
(701) 328-5188

PERMIT APPLICATION FOR
FUEL BURNING EQUIPMENT FOR INDIRECT HEATING

NORTH DAKOTA DEPARTMENT OF HEALTH
DIVISION OF AIR QUALITY
SFN 8518 (09-12)

SECTION A – FACILITY INFORMATION

Name of Firm or Organization ***Meridian Energy Group – Davis Refinery***		
Contact Person for Air Pollution Matters ***Tom Johnson***		
Title ***Vice President of Operations***	Telephone Number ***(409)795-0792***	E-mail Address ***tjohnson@meridianenergygroup.inc***
Applicant´s Name ***Tom Williams***		
Title ***VP of Planning & Permitting***	Telephone Number ***(707) 299-0182***	E-mail Address ***twilliams@meridianenergygroup.inc***
Mailing Address (Street & No.) ***2062 Business Center Drive, Suite 115***		
City ***Irvine***	State ***CA***	ZIP Code ***92612***
Facility Address (Street & No.) ***37th Street***		
City ***Belfield***	State ***ND***	ZIP Code ***58622***

County ***Billings***	Latitude (Nearest Second) ***46°52'45"N***	Longitude (Nearest Second) ***103°14'55" W***

Legal Description of Facility Site ***Property ID 07 0000 00165 000 in the SE 1/4 of Section 2, Twp 139N, Range 100W and Property ID: 07 0000 00162 000 in the NW1/4 and SW 1/4 of Section 1, Twp 139N, Range 100W***	Land Area at Facility Site ***261 Acres***	MSL Elevation at Facility ***2,685 feet***

SECTION B – EQUIPMENT

Source ID No. (From form SFN 8516) ***105-H-0501***	Name of Manufacturer ***TBD***
Rated Capacity/Maximum Input ***TBD***	Model Number ***TBD***
Purpose Space Heat _____% Process Heat ***100***%	Power Generation _____% Other (Specify % if Multi Purpose) _____%

SECTION C – TYPE OF COMBUSTION UNIT AND FUEL FEEDING METHOD

Coal (If other solid fuel, specify here) ☐Pulverized ☐General ☐Dry Bottom ☐Wet Bottom with Fly Ash Reinjection ☐Wet Bottom without Fly Ash Reinjection ☐Other – Specify:	☐Spreader Stoker with Fly Ash Reinjection ☐Spreader Stoker without Fly Ash Reinjection ☐Fluidized Bed ☐Cyclone ☐Hand-Fired
Fuel Oil ☐Horizontally Fired ☐Tangentially Fired ☐Other – Specify:	Gas ☐Horizontally Fired ☐Tangentially Fired ☐Other – Specify: ***TBD***

SECTION D – NORMAL SCHEDULE OF OPERATION

Hours Per Day	Days Per Week	Weeks Per Year	Hours Per Year Total	Peak Season (Specify Months)
24	***7***	***52***	***8760***	***N/A***

SECTION E – FUEL USE EXPECTED IN A CALENDAR YEAR

Year ***2017-2018***					
Primary Fuels			Standby Fuels		
Type ***Fuel Gas***			Type ***None***		
Quantity Per Year ***4,366,860***	Units of Measure ***lb/yr***		Quantity Per Year	Units of Measure	
Percent Ash (Solid Fuels Only)					
Minimum	Maximum	Average	Minimum	Maximum	Average
Percent Sulfur					
Minimum ***0***	Maximum ***0***	Average ***0***	Minimum	Maximum	Average
Btu Per Unit of Measure (e.g. lb, gal, etc. - Specify)					
Minimum ***TBD***	Maximum ***TBD***	Average ***27,582.75***	Minimum	Maximum	Average
Describe Fuel Transport and Storage Methods: ***N/A, fuel gas to be generated within the refinery***					

SECTION F – COMBUSTION AIR

☐Natural Draft ☐Induced ☐Forced ☐Other – Specify: ***TBD***

SECTION G – STACK DATA

Inside Diameter (ft) ***3***	Height Above Grade (ft) ***91***
Gas Temperature at Exit (Avg. °F) ***787.7***	Gas Velocity at Exit (Avg. ft/sec) ***16.2***
Are Emission Control Devices in Place? If YES – Complete SFN 8532 ☒ Yes ☐No	
Stack Exit Gas Flow Rate	
Average (ACFM) ***6,866.55***	Average (DSCFM) ***TBD***
Maximum (ACFM) ***TBD***	Maximum (DSCFM) ***TBD***
Are sampling ports available? ☐No ☒ Yes – Describe:	

SECTION H – NEARBY BUILDINGS

Attach drawings which show the plan and elevation views of any nearby buildings including the building that houses the fuel-fired equipment.
Plant layout drawings attached to this permit application.

SECTION I – AIR CONTAMINANTS EMITTED

Pollutant	Maximum Pounds Per Hour	Tons Per Year
PM_{10} Total	***5,50E-02***	***2,41E-01***
PM_{10} Filterable	***1,38E-02***	***6,02E-02***
$PM_{2.5}$ Total	***5,50E-02***	***2,41E-01***
$PM_{2.5}$ Filterable	***1,38E-02***	***6,02E-02***
$PM_{2.5}$ Condensable	***4,13E-02***	***1,81E-01***
Sulfur Dioxide	***8,09E-03***	***3,54E-02***
Nitrogen Oxides	***4,13E-01***	***1,81E+00***
Carbon Monoxide	***3,85E-01***	***1,69E+00***
Greenhouse Gases (CO2e)	***N/A***	
Other – Specify		
Lead	***6,74E-06***	***2,95E-05***
Metal HAP (Total)	***1,01E-04***	***4,40E-04***
Organic HAPs (Total)	***6,72E-03***	***2,94E-02***
VOC	***7,41E-02***	***3,25E-01***

Basis and Calculations for Quantities:
Engineering data and Emission factors from Table 1.4-2. AP 42, Chapter 1: External Combustion Sources. See Document P-5715043-01-001-18042-I001 "EMISSIONS INVENTORY" and P-5715043-01-001-18035-I001 "BACT Analysis"

Signature of Applicant	Date
	09/26/2016

SEND COMPLETED APPLICATION AND ALL ATTACHMENTS TO:

North Dakota Department of Health
Division of Air Quality
918 E Divide Ave., 2nd Floor
Bismarck, ND 58501-1947
(701) 328-5188

PERMIT APPLICATION FOR
FUEL BURNING EQUIPMENT FOR INDIRECT HEATING

NORTH DAKOTA DEPARTMENT OF HEALTH
DIVISION OF AIR QUALITY
SFN 8518 (09-12)

SECTION A – FACILITY INFORMATION

Name of Firm or Organization ***Meridian Energy Group – Davis Refinery***		
Contact Person for Air Pollution Matters ***Tom Johnson***		
Title ***Vice President of Operations***	Telephone Number ***(409)795-0792***	E-mail Address ***tjohnson@meridianenergygroup.inc***
Applicant´s Name ***Tom Williams***		
Title ***VP of Planning & Permitting***	Telephone Number ***(707) 299-0182***	E-mail Address ***twilliams@meridianenergygroup.inc***
Mailing Address (Street & No.) ***2062 Business Center Drive, Suite 115***		
City ***Irvine***	State ***CA***	ZIP Code ***92612***
Facility Address (Street & No.) ***37th Street***		
City ***Belfield***	State ***ND***	ZIP Code ***58622***

County ***Billings***	Latitude (Nearest Second) ***46°52'45"N***	Longitude (Nearest Second) ***103°14'55" W***

Legal Description of Facility Site ***Property ID 07 0000 00165 000 in the SE 1/4 of Section 2, Twp 139N, Range 100W and Property ID: 07 0000 00162 000 in the NW1/4 and SW 1/4 of Section 1, Twp 139N, Range 100W***	Land Area at Facility Site ***261 Acres***	MSL Elevation at Facility ***2,685 feet***

SECTION B – EQUIPMENT

Source ID No. (From form SFN 8516) ***105-H-0502***	Name of Manufacturer ***TBD***
Rated Capacity/Maximum Input ***TBD***	Model Number ***TBD***
Purpose Space Heat _____% Process Heat ***100***%	Power Generation _____% Other (Specify % if Multi Purpose) _____%

SECTION C – TYPE OF COMBUSTION UNIT AND FUEL FEEDING METHOD

Coal (If other solid fuel, specify here) ☐Pulverized ☐General ☐Dry Bottom ☐Wet Bottom with Fly Ash Reinjection ☐Wet Bottom without Fly Ash Reinjection ☐Other – Specify:	☐Spreader Stoker with Fly Ash Reinjection ☐Spreader Stoker without Fly Ash Reinjection ☐Fluidized Bed ☐Cyclone ☐Hand-Fired
Fuel Oil ☐Horizontally Fired ☐Tangentially Fired ☐Other – Specify:	Gas ☐Horizontally Fired ☐Tangentially Fired ☐Other – Specify: ***TBD***

SECTION D – NORMAL SCHEDULE OF OPERATION

Hours Per Day	Days Per Week	Weeks Per Year	Hours Per Year Total	Peak Season (Specify Months)
24	***7***	***52***	***8760***	***N/A***

SECTION E – FUEL USE EXPECTED IN A CALENDAR YEAR

Year ***2017-2018***					
Primary Fuels			Standby Fuels		
Type ***Fuel Gas***			Type ***None***		
Quantity Per Year ***5,161,392***	Units of Measure ***lb/yr***		Quantity Per Year	Units of Measure	
Percent Ash (Solid Fuels Only)					
Minimum	Maximum	Average	Minimum	Maximum	Average
Percent Sulfur					
Minimum ***0***	Maximum ***0***	Average ***0***	Minimum	Maximum	Average
Btu Per Unit of Measure (e.g. lb, gal, etc. - Specify)					
Minimum ***TBD***	Maximum ***TBD***	Average ***27,579.77***	Minimum	Maximum	Average
Describe Fuel Transport and Storage Methods: ***N/A, fuel gas to be generated within the refinery***					

SECTION F – COMBUSTION AIR

☐Natural Draft ☐Induced ☐Forced ☐Other – Specify: ***TBD***

SECTION G – STACK DATA

Inside Diameter (ft) ***3***	Height Above Grade (ft) ***91***
Gas Temperature at Exit (Avg. °F) ***787.7***	Gas Velocity at Exit (Avg. ft/sec) ***19.1***
Are Emission Control Devices in Place? If YES – Complete SFN 8532 ☒ Yes ☐No	
Stack Exit Gas Flow Rate	
Average (ACFM) ***8,115.32***	Average (DSCFM) ***TBD***
Maximum (ACFM) ***TBD***	Maximum (DSCFM) ***TBD***
Are sampling ports available? ☐No ☒ Yes – Describe:	

SECTION H – NEARBY BUILDINGS

Attach drawings which show the plan and elevation views of any nearby buildings including the building that houses the fuel-fired equipment.
Plant layout drawings attached to this permit application.

SECTION I – AIR CONTAMINANTS EMITTED

Pollutant	Maximum Pounds Per Hour	Tons Per Year
PM_{10} Total	***6,50E-02***	***2,85E-01***
PM_{10} Filterable	***1,63E-02***	***7,12E-02***
$PM_{2.5}$ Total	***6,50E-02***	***2,85E-01***
$PM_{2.5}$ Filterable	***1,63E-02***	***7,12E-02***
$PM_{2.5}$ Condensable	***4,88E-02***	***2,14E-01***
Sulfur Dioxide	***9,56E-03***	***4,19E-02***
Nitrogen Oxides	***4,88E-01***	***2,14E+00***
Carbon Monoxide	***4,55E-01***	***1,99E+00***
Greenhouse Gases (CO2e)	***N/A***	
Other – Specify		
Lead	***7,96E-06***	***3,49E-05***
Metal HAP (Total)	***1,19E-04***	***5,20E-04***
Organic HAPs (Total)	***7,94E-03***	***3,48E-02***
VOC	***8,76E-02***	***3,84E-01***

Basis and Calculations for Quantities:
Engineering data and Emission factors from Table 1.4-2. AP 42, Chapter 1: External Combustion Sources. See Document P-5715043-01-001-18042-I001 "EMISSIONS INVENTORY" and P-5715043-01-001-18035-I001 "BACT Analysis"

Signature of Applicant	Date
Tom Williams	09/26/2016

SEND COMPLETED APPLICATION AND ALL ATTACHMENTS TO:

North Dakota Department of Health
Division of Air Quality
918 E Divide Ave., 2nd Floor
Bismarck, ND 58501-1947
(701) 328-5188

PERMIT APPLICATION FOR
FUEL BURNING EQUIPMENT FOR INDIRECT HEATING

NORTH DAKOTA DEPARTMENT OF HEALTH
DIVISION OF AIR QUALITY
SFN 8518 (09-12)

SECTION A – FACILITY INFORMATION

Name of Firm or Organization ***Meridian Energy Group – Davis Refinery***		
Contact Person for Air Pollution Matters ***Tom Johnson***		
Title ***Vice President of Operations***	Telephone Number ***(409)795-0792***	E-mail Address ***tjohnson@meridianenergygroup.inc***
Applicant´s Name ***Tom Williams***		
Title ***VP of Planning & Permitting***	Telephone Number ***(707) 299-0182***	E-mail Address ***twilliams@meridianenergygroup.inc***
Mailing Address (Street & No.) ***2062 Business Center Drive, Suite 115***		
City ***Irvine***	State ***CA***	ZIP Code ***92612***
Facility Address (Street & No.) ***37th Street***		
City ***Belfield***	State ***ND***	ZIP Code ***58622***

County ***Billings***	Latitude (Nearest Second) ***46°52'45"N***	Longitude (Nearest Second) ***103°14'55" W***

Legal Description of Facility Site ***Property ID 07 0000 00165 000 in the SE 1/4 of Section 2, Twp 139N, Range 100W and Property ID: 07 0000 00162 000 in the NW1/4 and SW 1/4 of Section 1, Twp 139N, Range 100W***	Land Area at Facility Site ***261 Acres***	MSL Elevation at Facility ***2,685 feet***

SECTION B – EQUIPMENT

Source ID No. (From form SFN 8516) ***106-H-0601***	Name of Manufacturer ***TBD***
Rated Capacity/Maximum Input ***TBD***	Model Number ***TBD***
Purpose Space Heat _____% Process Heat ***100***%	Power Generation _____% Other (Specify % if Multi Purpose) _____%

SECTION C – TYPE OF COMBUSTION UNIT AND FUEL FEEDING METHOD

Coal (If other solid fuel, specify here) ☐Pulverized ☐General ☐Dry Bottom ☐Wet Bottom with Fly Ash Reinjection ☐Wet Bottom without Fly Ash Reinjection ☐Other – Specify:	☐Spreader Stoker with Fly Ash Reinjection ☐Spreader Stoker without Fly Ash Reinjection ☐Fluidized Bed ☐Cyclone ☐Hand-Fired
Fuel Oil ☐Horizontally Fired ☐Tangentially Fired ☐Other – Specify:	Gas ☐Horizontally Fired ☐Tangentially Fired ☐Other – Specify: ***TBD***

SECTION D – NORMAL SCHEDULE OF OPERATION

Hours Per Day	Days Per Week	Weeks Per Year	Hours Per Year Total	Peak Season (Specify Months)
24	***7***	***52***	***8760***	***N/A***

SECTION E – FUEL USE EXPECTED IN A CALENDAR YEAR

Year ***2017-2018***					
Primary Fuels			Standby Fuels		
Type ***Fuel Gas***			Type ***none***		
Quantity Per Year ***13,253,880***	Units of Measure ***lb/yr***		Quantity Per Year	Units of Measure	
Percent Ash (Solid Fuels Only)					
Minimum	Maximum	Average	Minimum	Maximum	Average
Percent Sulfur					
Minimum ***0***	Maximum ***0***	Average ***0***	Minimum	Maximum	Average
Btu Per Unit of Measure (e.g. lb, gal, etc. - Specify)					
Minimum ***TBD***	Maximum ***TBD***	Average ***27,580.96***	Minimum	Maximum	Average
Describe Fuel Transport and Storage Methods: ***N/A, fuel gas to be generated within the refinery***					

SECTION F – COMBUSTION AIR

☐Natural Draft ☐Induced ☐Forced ☐Other – Specify: ***TBD***

SECTION G – STACK DATA

Inside Diameter (ft) ***4***	Height Above Grade (ft) ***42***
Gas Temperature at Exit (Avg. °F) ***786.2***	Gas Velocity at Exit (Avg. ft/sec) ***27.5***
Are Emission Control Devices in Place? If YES – Complete SFN 8532 ☒ Yes ☐No	
Stack Exit Gas Flow Rate	
Average (ACFM) ***20,769.92***	Average (DSCFM) ***TBD***
Maximum (ACFM) ***TBD***	Maximum (DSCFM) ***TBD***
Are sampling ports available? ☐No ☒ Yes – Describe:	

SECTION H – NEARBY BUILDINGS

Attach drawings which show the plan and elevation views of any nearby buildings including the building that houses the fuel-fired equipment.
Plant layout drawings attached to this permit application.

SECTION I – AIR CONTAMINANTS EMITTED

Pollutant	Maximum Pounds Per Hour	Tons Per Year
PM_{10} Total	***1,67E-01***	***7,31E-01***
PM_{10} Filterable	***4,17E-02***	***1,83E-01***
$PM_{2.5}$ Total	***1,67E-01***	***7,31E-01***
$PM_{2.5}$ Filterable	***4,17E-02***	***1,83E-01***
$PM_{2.5}$ Condensable	***1,25E-01***	***5,48E-01***
Sulfur Dioxide	***2,45E-02***	***1,08E-01***
Nitrogen Oxides	***2,63E-01***	***1,15E+00***
Carbon Monoxide	***1,17E+00***	***5,12E+00***
Greenhouse Gases (CO2e)	***N/A***	
Other – Specify		
Lead	***2,04E-05***	***8,96E-05***
Metal HAP (Total)	***3,05E-04***	***1,34E-03***
Organic HAPs (Total)	***2,04E-02***	***8,94E-02***
VOC	***2,25E-01***	***9,86E-01***

Basis and Calculations for Quantities:
Engineering data and Emission factors from Table 1.4-2. AP 42, Chapter 1: External Combustion Sources. See Document P-5715043-01-001-18042-I001 "EMISSIONS INVENTORY" and P-5715043-01-001-18035-I001 "BACT Analysis"

Signature of Applicant	Date
Jon Wilson	09/26/2016

SEND COMPLETED APPLICATION AND ALL ATTACHMENTS TO:

North Dakota Department of Health
Division of Air Quality
918 E Divide Ave., 2nd Floor
Bismarck, ND 58501-1947
(701) 328-5188

PERMIT APPLICATION FOR
FUEL BURNING EQUIPMENT FOR INDIRECT HEATING

NORTH DAKOTA DEPARTMENT OF HEALTH
DIVISION OF AIR QUALITY
SFN 8518 (09-12)

SECTION A – FACILITY INFORMATION

Name of Firm or Organization ***Meridian Energy Group – Davis Refinery***		
Contact Person for Air Pollution Matters ***Tom Johnson***		
Title ***Vice President of Operations***	Telephone Number ***(409)795-0792***	E-mail Address ***tjohnson@meridianenergygroup.inc***
Applicant´s Name ***Tom Williams***		
Title ***VP of Planning & Permitting***	Telephone Number ***(707) 299-0182***	E-mail Address ***twilliams@meridianenergygroup.inc***
Mailing Address (Street & No.) ***2062 Business Center Drive, Suite 115***		
City ***Irvine***	State ***CA***	ZIP Code ***92612***
Facility Address (Street & No.) ***37th Street***		
City ***Belfield***	State ***ND***	ZIP Code ***58622***
County ***Billings***	Latitude (Nearest Second) ***46°52'45"N***	Longitude (Nearest Second) ***103°14'55" W***
Legal Description of Facility Site ***Property ID 07 0000 00165 000 in the SE 1/4 of Section 2, Twp 139N, Range 100W and Property ID: 07 0000 00162 000 in the NW1/4 and SW 1/4 of Section 1, Twp 139N, Range 100W***	Land Area at Facility Site ***261 Acres***	MSL Elevation at Facility ***2,685 feet***

SECTION B – EQUIPMENT

Source ID No. (From form SFN 8516) ***107-H-0701***	Name of Manufacturer ***TBD***
Rated Capacity/Maximum Input ***TBD***	Model Number ***TBD***
Purpose Space Heat _____% Process Heat ___***100***___%	Power Generation _____% Other (Specify % if Multi Purpose) _____%

SECTION C – TYPE OF COMBUSTION UNIT AND FUEL FEEDING METHOD

Coal (If other solid fuel, specify here) ☐Pulverized ☐General ☐Dry Bottom ☐Wet Bottom with Fly Ash Reinjection ☐Wet Bottom without Fly Ash Reinjection ☐Other – Specify:	☐Spreader Stoker with Fly Ash Reinjection ☐Spreader Stoker without Fly Ash Reinjection ☐Fluidized Bed ☐Cyclone ☐Hand-Fired
Fuel Oil ☐Horizontally Fired ☐Tangentially Fired ☐Other – Specify:	Gas ☐Horizontally Fired ☐Tangentially Fired ☐Other – Specify: ***TBD***

SECTION D – NORMAL SCHEDULE OF OPERATION

Hours Per Day	Days Per Week	Weeks Per Year	Hours Per Year Total	Peak Season (Specify Months)
24	***7***	***52***	***8760***	***N/A***

SECTION E – FUEL USE EXPECTED IN A CALENDAR YEAR

Year ***2017-2018***					
Primary Fuels			Standby Fuels		
Type ***Fuel Gas***			Type ***None***		
Quantity Per Year ***29,381,040***	Units of Measure ***lb/yr***		Quantity Per Year	Units of Measure	
Percent Ash (Solid Fuels Only)					
Minimum	Maximum	Average	Minimum	Maximum	Average
Percent Sulfur					
Minimum ***0***	Maximum ***0***	Average ***0***	Minimum	Maximum	Average
Btu Per Unit of Measure (e.g. lb, gal, etc. - Specify)					
Minimum ***TBD***	Maximum ***TBD***	Average ***27,579.01***	Minimum	Maximum	Average
Describe Fuel Transport and Storage Methods: ***N/A, fuel gas to be generated within the refinery***					

SECTION F – COMBUSTION AIR

☐Natural Draft ☐Induced ☐Forced ☐Other – Specify: ***TBD***

SECTION G – STACK DATA

Inside Diameter (ft) ***6***	Height Above Grade (ft) ***120***
Gas Temperature at Exit (Avg. °F) ***787.7***	Gas Velocity at Exit (Avg. ft/sec) ***27.2***
Are Emission Control Devices in Place? If YES – Complete SFN 8532 ☒ Yes ☐No	
Stack Exit Gas Flow Rate	
Average (ACFM) ***46,194.82***	Average (DSCFM) ***TBD***
Maximum (ACFM) ***TBD***	Maximum (DSCFM) ***TBD***
Are sampling ports available? ☐No ☒ Yes – Describe:	

SECTION H – NEARBY BUILDINGS

Attach drawings which show the plan and elevation views of any nearby buildings including the building that houses the fuel-fired equipment.
Plant layout drawings attached to this permit application.

SECTION I – AIR CONTAMINANTS EMITTED

Pollutant	Maximum Pounds Per Hour	Tons Per Year
PM_{10} Total	***3,70E-01***	***1,62E+00***
PM_{10} Filterable	***9,25E-02***	***4,05E-01***
$PM_{2.5}$ Total	***3,70E-01***	***1,62E+00***
$PM_{2.5}$ Filterable	***9,25E-02***	***4,05E-01***
$PM_{2.5}$ Condensable	***2,78E-01***	***1,22E+00***
Sulfur Dioxide	***5,44E-02***	***2,38E-01***
Nitrogen Oxides	***5,83E-01***	***2,55E+00***
Carbon Monoxide	***2,59E+00***	***1,13E+01***
Greenhouse Gases (CO2e)	***N/A***	
Other – Specify		
Lead	***4,53E-05***	***1,99E-04***
Metal HAP (Total)	***6,76E-04***	***2,96E-03***
Organic HAPs (Total)	***4,52E-02***	***1,98E-01***
VOC	***4,99E-01***	***2,18E+00***

Basis and Calculations for Quantities:
Engineering data and Emission factors from Table 1.4-2. AP 42, Chapter 1: External Combustion Sources. See Document P-5715043-01-001-18042-I001 "EMISSIONS INVENTORY" and P-5715043-01-001-18035-I001 "BACT Analysis"

Signature of Applicant	Date
	09/26/2016

SEND COMPLETED APPLICATION AND ALL ATTACHMENTS TO:

North Dakota Department of Health
Division of Air Quality
918 E Divide Ave., 2nd Floor
Bismarck, ND 58501-1947
(701) 328-5188

PERMIT APPLICATION FOR
FUEL BURNING EQUIPMENT FOR INDIRECT HEATING

NORTH DAKOTA DEPARTMENT OF HEALTH
DIVISION OF AIR QUALITY
SFN 8518 (09-12)

SECTION A – FACILITY INFORMATION

Name of Firm or Organization ***Meridian Energy Group – Davis Refinery***		
Contact Person for Air Pollution Matters ***Tom Johnson***		
Title ***Vice President of Operations***	Telephone Number ***(409)795-0792***	E-mail Address ***tjohnson@meridianenergygroup.inc***
Applicant´s Name ***Tom Williams***		
Title ***VP of Planning & Permitting***	Telephone Number ***(707) 299-0182***	E-mail Address ***twilliams@meridianenergygroup.inc***
Mailing Address (Street & No.) ***2062 Business Center Drive, Suite 115***		
City ***Irvine***	State ***CA***	ZIP Code ***92612***
Facility Address (Street & No.) ***37th Street***		
City ***Belfield***	State ***ND***	ZIP Code ***58622***

County ***Billings***	Latitude (Nearest Second) ***46°52'45"N***	Longitude (Nearest Second) ***103°14'55" W***

Legal Description of Facility Site ***Property ID 07 0000 00165 000 in the SE 1/4 of Section 2, Twp 139N, Range 100W and Property ID: 07 0000 00162 000 in the NW1/4 and SW 1/4 of Section 1, Twp 139N, Range 100W***	Land Area at Facility Site ***261 Acres***	MSL Elevation at Facility ***2,685 feet***

SECTION B – EQUIPMENT

Source ID No. (From form SFN 8516) ***110-H-1001***	Name of Manufacturer ***TBD***
Rated Capacity/Maximum Input ***TBD***	Model Number ***TBD***
Purpose Space Heat _____% Process Heat ***100***%	Power Generation _____% Other (Specify % if Multi Purpose) _____%

SECTION C – TYPE OF COMBUSTION UNIT AND FUEL FEEDING METHOD

Coal (If other solid fuel, specify here) ☐Pulverized ☐General ☐Dry Bottom ☐Wet Bottom with Fly Ash Reinjection ☐Wet Bottom without Fly Ash Reinjection ☐Other – Specify:	☐Spreader Stoker with Fly Ash Reinjection ☐Spreader Stoker without Fly Ash Reinjection ☐Fluidized Bed ☐Cyclone ☐Hand-Fired
Fuel Oil ☐Horizontally Fired ☐Tangentially Fired ☐Other – Specify:	Gas ☐Horizontally Fired ☐Tangentially Fired ☐Other – Specify: ***TBD***

SECTION D – NORMAL SCHEDULE OF OPERATION

Hours Per Day	Days Per Week	Weeks Per Year	Hours Per Year Total	Peak Season (Specify Months)
24	***7***	***52***	***8760***	***N/A***

SECTION E – FUEL USE EXPECTED IN A CALENDAR YEAR

Year ***2017-2018***					
Primary Fuels			Standby Fuels		
Type ***Fuel Gas***			Type ***none***		
Quantity Per Year ***6,902,880***	Units of Measure ***lb/yr***		Quantity Per Year	Units of Measure	
Percent Ash (Solid Fuels Only)					
Minimum	Maximum	Average	Minimum	Maximum	Average
Percent Sulfur					
Minimum ***0***	Maximum ***0***	Average ***0***	Minimum	Maximum	Average
Btu Per Unit of Measure (e.g. lb, gal, etc. - Specify)					
Minimum ***TBD***	Maximum ***TBD***	Average ***20,621.83***	Minimum	Maximum	Average
Describe Fuel Transport and Storage Methods: ***N/A, fuel gas to be generated within the refinery***					

SECTION F – COMBUSTION AIR

☐Natural Draft ☐Induced ☐Forced ☐Other – Specify: ***TBD***

SECTION G – STACK DATA

Inside Diameter (ft) ***2.5***	Height Above Grade (ft) ***96***
Gas Temperature at Exit (Avg. °F) ***764.3***	Gas Velocity at Exit (Avg. ft/sec) ***28.4***
Are Emission Control Devices in Place? If YES – Complete SFN 8532 ☒ Yes ☐No	
Stack Exit Gas Flow Rate	
Average (ACFM) ***8,091.77***	Average (DSCFM) ***TBD***
Maximum (ACFM) ***TBD***	Maximum (DSCFM) ***TBD***
Are sampling ports available? ☐No ☒ Yes – Describe:	

SECTION H – NEARBY BUILDINGS

Attach drawings which show the plan and elevation views of any nearby buildings including the building that houses the fuel-fired equipment.
Plant layout drawings attached to this permit application.

SECTION I – AIR CONTAMINANTS EMITTED

Pollutant	Maximum Pounds Per Hour	Tons Per Year
PM_{10} Total	***6,50E-02***	***2,85E-01***
PM_{10} Filterable	***1,63E-02***	***7,12E-02***
$PM_{2.5}$ Total	***6,50E-02***	***2,85E-01***
$PM_{2.5}$ Filterable	***1,63E-02***	***7,12E-02***
$PM_{2.5}$ Condensable	***4,88E-02***	***2,14E-01***
Sulfur Dioxide	***9,56E-03***	***4,19E-02***
Nitrogen Oxides	***4,88E-01***	***2,14E+00***
Carbon Monoxide	***4,55E-01***	***1,99E+00***
Greenhouse Gases (CO2e)	***N/A***	
Other – Specify		
Lead	***7,96E-06***	***3,49E-05***
Metal HAP (Total)	***1,19E-04***	***5,20E-04***
Organic HAPs (Total)	***7,94E-03***	***3,48E-02***
VOC	***8,76E-02***	***3,84E-01***

Basis and Calculations for Quantities:
Engineering data and Emission factors from Table 1.4-2. AP 42, Chapter 1: External Combustion Sources. See Document P-5715043-01-001-18042-I001 "EMISSIONS INVENTORY" and P-5715043-01-001-18035-I001 "BACT Analysis"

Signature of Applicant	Date
Jon Wilkins	09/26/2016

SEND COMPLETED APPLICATION AND ALL ATTACHMENTS TO:

North Dakota Department of Health
Division of Air Quality
918 E Divide Ave., 2nd Floor
Bismarck, ND 58501-1947
(701) 328-5188

PERMIT APPLICATION FOR
FUEL BURNING EQUIPMENT FOR INDIRECT HEATING

NORTH DAKOTA DEPARTMENT OF HEALTH
DIVISION OF AIR QUALITY
SFN 8518 (09-12)

SECTION A – FACILITY INFORMATION

Name of Firm or Organization ***Meridian Energy Group – Davis Refinery***		
Contact Person for Air Pollution Matters ***Tom Johnson***		
Title ***Vice President of Operations***	Telephone Number ***(409)795-0792***	E-mail Address ***tjohnson@meridianenergygroup.inc***
Applicant´s Name ***Tom Williams***		
Title ***VP of Planning & Permitting***	Telephone Number ***(707) 299-0182***	E-mail Address ***twilliams@meridianenergygroup.inc***
Mailing Address (Street & No.) ***2062 Business Center Drive, Suite 115***		
City ***Irvine***	State ***CA***	ZIP Code ***92612***
Facility Address (Street & No.) ***37th Street***		
City ***Belfield***	State ***ND***	ZIP Code ***58622***

County ***Billings***	Latitude (Nearest Second) ***46°52'45"N***	Longitude (Nearest Second) ***103°14'55" W***

Legal Description of Facility Site ***Property ID 07 0000 00165 000 in the SE 1/4 of Section 2, Twp 139N, Range 100W and Property ID: 07 0000 00162 000 in the NW1/4 and SW 1/4 of Section 1, Twp 139N, Range 100W***	Land Area at Facility Site ***261 Acres***	MSL Elevation at Facility ***2,685 feet***

SECTION B – EQUIPMENT

Source ID No. (From form SFN 8516) ***111-H-1101***	Name of Manufacturer ***TBD***
Rated Capacity/Maximum Input ***TBD***	Model Number ***TBD***
Purpose Space Heat _____% Process Heat ***100***%	Power Generation _____% Other (Specify % if Multi Purpose) _____%

SECTION C – TYPE OF COMBUSTION UNIT AND FUEL FEEDING METHOD

Coal (If other solid fuel, specify here) ☐Pulverized ☐General ☐Dry Bottom ☐Wet Bottom with Fly Ash Reinjection ☐Wet Bottom without Fly Ash Reinjection ☐Other – Specify:	☐Spreader Stoker with Fly Ash Reinjection ☐Spreader Stoker without Fly Ash Reinjection ☐Fluidized Bed ☐Cyclone ☐Hand-Fired
Fuel Oil ☐Horizontally Fired ☐Tangentially Fired ☐Other – Specify:	Gas ☐Horizontally Fired ☐Tangentially Fired ☐Other – Specify: ***TBD***

SECTION D – NORMAL SCHEDULE OF OPERATION

Hours Per Day	Days Per Week	Weeks Per Year	Hours Per Year Total	Peak Season (Specify Months)
24	***7***	***52***	***8760***	***N/A***

SECTION E – FUEL USE EXPECTED IN A CALENDAR YEAR

Year ***2017-2018***					
Primary Fuels			Standby Fuels		
Type ***Fuel Gas***			Type ***None***		
Quantity Per Year ***4,415,040***	Units of Measure ***lb/yr***		Quantity Per Year	Units of Measure	
Percent Ash (Solid Fuels Only)					
Minimum	Maximum	Average	Minimum	Maximum	Average
Percent Sulfur					
Minimum ***0***	Maximum ***0***	Average ***0***	Minimum	Maximum	Average
Btu Per Unit of Measure (e.g. lb, gal, etc. - Specify)					
Minimum ***TBD***	Maximum ***TBD***	Average ***27,579.37***	Minimum	Maximum	Average
Describe Fuel Transport and Storage Methods: ***N/A, fuel gas to be generated within the refinery***					

SECTION F – COMBUSTION AIR

☐Natural Draft ☐Induced ☐Forced ☐Other – Specify: ***TBD***

SECTION G – STACK DATA

Inside Diameter (ft) ***3.5***	Height Above Grade (ft) ***170***
Gas Temperature at Exit (Avg. °F) ***793.1***	Gas Velocity at Exit (Avg. ft/sec) ***12.1***
Are Emission Control Devices in Place? If YES – Complete SFN 8532 ☒ Yes ☐No	
Stack Exit Gas Flow Rate	
Average (ACFM) ***6,964.97***	Average (DSCFM) ***TBD***
Maximum (ACFM) ***TBD***	Maximum (DSCFM) ***TBD***
Are sampling ports available? ☐No ☒ Yes – Describe:	

SECTION H – NEARBY BUILDINGS

Attach drawings which show the plan and elevation views of any nearby buildings including the building that houses the fuel-fired equipment.
Plant layout drawings attached to this permit application.

SECTION I – AIR CONTAMINANTS EMITTED

Pollutant	Maximum Pounds Per Hour	Tons Per Year
PM_{10} Total	***5,56E-02***	***2,44E-01***
PM_{10} Filterable	***1,39E-02***	***6,09E-02***
$PM_{2.5}$ Total	***5,56E-02***	***2,44E-01***
$PM_{2.5}$ Filterable	***1,39E-02***	***6,09E-02***
$PM_{2.5}$ Condensable	***4,17E-02***	***1,83E-01***
Sulfur Dioxide	***8,18E-03***	***3,58E-02***
Nitrogen Oxides	***4,17E-01***	***1,83E+00***
Carbon Monoxide	***3,89E-01***	***1,70E+00***
Greenhouse Gases (CO2e)	***N/A***	
Other – Specify		
Lead	***6,81E-06***	***2,98E-05***
Metal HAP (Total)	***1,02E-04***	***4,45E-04***
Organic HAPs (Total)	***6,80E-03***	***2,98E-02***
VOC	***7,50E-02***	***3,28E-01***

Basis and Calculations for Quantities:
Engineering data and Emission factors from Table 1.4-2. AP 42, Chapter 1: External Combustion Sources. See Document P-5715043-01-001-18042-I001 "EMISSIONS INVENTORY" and P-5715043-01-001-18035-I001 "BACT Analysis"

Signature of Applicant	Date
	09/26/2016

SEND COMPLETED APPLICATION AND ALL ATTACHMENTS TO:

North Dakota Department of Health
Division of Air Quality
918 E Divide Ave., 2nd Floor
Bismarck, ND 58501-1947
(701) 328-5188

PERMIT APPLICATION FOR
FUEL BURNING EQUIPMENT FOR INDIRECT HEATING

NORTH DAKOTA DEPARTMENT OF HEALTH
DIVISION OF AIR QUALITY
SFN 8518 (09-12)

SECTION A – FACILITY INFORMATION

Name of Firm or Organization ***Meridian Energy Group – Davis Refinery***		
Contact Person for Air Pollution Matters ***Tom Johnson***		
Title ***Vice President of Operations***	Telephone Number ***(409)795-0792***	E-mail Address ***tjohnson@meridianenergygroup.inc***
Applicant´s Name ***Tom Williams***		
Title ***VP of Planning & Permitting***	Telephone Number ***(707) 299-0182***	E-mail Address ***twilliams@meridianenergygroup.inc***
Mailing Address (Street & No.) ***2062 Business Center Drive, Suite 115***		
City ***Irvine***	State ***CA***	ZIP Code ***92612***
Facility Address (Street & No.) ***37th Street***		
City ***Belfield***	State ***ND***	ZIP Code ***58622***

County ***Billings***	Latitude (Nearest Second) ***46°52'45"N***	Longitude (Nearest Second) ***103°14'55" W***

Legal Description of Facility Site ***Property ID 07 0000 00165 000 in the SE 1/4 of Section 2, Twp 139N, Range 100W and Property ID: 07 0000 00162 000 in the NW1/4 and SW 1/4 of Section 1, Twp 139N, Range 100W***	Land Area at Facility Site ***261 Acres***	MSL Elevation at Facility ***2,685 feet***

SECTION B – EQUIPMENT

Source ID No. (From form SFN 8516) ***112-H-1201***	Name of Manufacturer ***TBD***
Rated Capacity/Maximum Input ***TBD***	Model Number ***TBD***
Purpose Space Heat _____% Process Heat ***100***%	Power Generation _____% Other (Specify % if Multi Purpose) _____%

SECTION C – TYPE OF COMBUSTION UNIT AND FUEL FEEDING METHOD

Coal (If other solid fuel, specify here) ☐Pulverized ☐General ☐Dry Bottom ☐Wet Bottom with Fly Ash Reinjection ☐Wet Bottom without Fly Ash Reinjection ☐Other – Specify:	☐Spreader Stoker with Fly Ash Reinjection ☐Spreader Stoker without Fly Ash Reinjection ☐Fluidized Bed ☐Cyclone ☐Hand-Fired
Fuel Oil ☐Horizontally Fired ☐Tangentially Fired ☐Other – Specify:	Gas ☐Horizontally Fired ☐Tangentially Fired ☐Other – Specify: ***TBD***

SECTION D – NORMAL SCHEDULE OF OPERATION

Hours Per Day	Days Per Week	Weeks Per Year	Hours Per Year Total	Peak Season (Specify Months)
24	***7***	***52***	***8760***	***N/A***

SECTION E – FUEL USE EXPECTED IN A CALENDAR YEAR

Year ***2017-2018***					
Primary Fuels			Standby Fuels		
Type ***Fuel Gas***			Type ***none***		
Quantity Per Year ***9,005,280***	Units of Measure ***lb/yr***		Quantity Per Year	Units of Measure	
Percent Ash (Solid Fuels Only)					
Minimum	Maximum	Average	Minimum	Maximum	Average
Percent Sulfur					
Minimum ***0***	Maximum ***0***	Average ***0***	Minimum	Maximum	Average
Btu Per Unit of Measure (e.g. lb, gal, etc. - Specify)					
Minimum ***TBD***	Maximum ***TBD***	Average ***27,577.82***	Minimum	Maximum	Average
Describe Fuel Transport and Storage Methods: ***N/A, fuel gas to be generated within the refinery***					

SECTION F – COMBUSTION AIR

☐Natural Draft ☐Induced ☐Forced ☐Other – Specify: ***TBD***

SECTION G – STACK DATA

Inside Diameter (ft) ***5.5***	Height Above Grade (ft) ***72***
Gas Temperature at Exit (Avg. °F) ***785***	Gas Velocity at Exit (Avg. ft/sec) ***9.9***
Are Emission Control Devices in Place? If YES – Complete SFN 8532 ☒ Yes ☐No	
Stack Exit Gas Flow Rate	
Average (ACFM) ***14,110.55***	Average (DSCFM) ***TBD***
Maximum (ACFM) ***TBD***	Maximum (DSCFM) ***TBD***
Are sampling ports available? ☐No ☒ Yes – Describe:	

SECTION H – NEARBY BUILDINGS

Attach drawings which show the plan and elevation views of any nearby buildings including the building that houses the fuel-fired equipment.
Plant layout drawings attached to this permit application.

SECTION I – AIR CONTAMINANTS EMITTED

Pollutant	Maximum Pounds Per Hour	Tons Per Year
PM_{10} Total	***1,13E-01***	***4,97E-01***
PM_{10} Filterable	***2,84E-02***	***1,24E-01***
$PM_{2.5}$ Total	***1,13E-01***	***4,97E-01***
$PM_{2.5}$ Filterable	***2,84E-02***	***1,24E-01***
$PM_{2.5}$ Condensable	***8,51E-02***	***3,73E-01***
Sulfur Dioxide	***1,67E-02***	***7,30E-02***
Nitrogen Oxides	***8,51E-01***	***3,73E+00***
Carbon Monoxide	***7,94E-01***	***3,48E+00***
Greenhouse Gases (CO2e)	***N/A***	
Other – Specify		
Lead	***1,39E-05***	***6,08E-05***
Metal HAP (Total)	***2,07E-04***	***9,08E-04***
Organic HAPs (Total)	***1,39E-02***	***6,07E-02***
VOC	***1,53E-01***	***6,70E-01***

Basis and Calculations for Quantities:
Engineering data and Emission factors from Table 1.4-2. AP 42, Chapter 1: External Combustion Sources. See Document P-5715043-01-001-18042-I001 "EMISSIONS INVENTORY" and P-5715043-01-001-18035-I001 "BACT Analysis"

Signature of Applicant	Date
Tom Williams	09/26/2016

SEND COMPLETED APPLICATION AND ALL ATTACHMENTS TO:

North Dakota Department of Health
Division of Air Quality
918 E Divide Ave., 2nd Floor
Bismarck, ND 58501-1947
(701) 328-5188

PERMIT APPLICATION FOR
FUEL BURNING EQUIPMENT FOR INDIRECT HEATING

NORTH DAKOTA DEPARTMENT OF HEALTH
DIVISION OF AIR QUALITY
SFN 8518 (09-12)

SECTION A – FACILITY INFORMATION

Name of Firm or Organization ***Meridian Energy Group – Davis Refinery***		
Contact Person for Air Pollution Matters ***Tom Johnson***		
Title ***Vice President of Operations***	Telephone Number ***(409)795-0792***	E-mail Address ***tjohnson@meridianenergygroup.inc***
Applicant´s Name ***Tom Williams***		
Title ***VP of Planning & Permitting***	Telephone Number ***(707) 299-0182***	E-mail Address ***twilliams@meridianenergygroup.inc***
Mailing Address (Street & No.) ***2062 Business Center Drive, Suite 115***		
City ***Irvine***	State ***CA***	ZIP Code ***92612***
Facility Address (Street & No.) ***37th Street***		
City ***Belfield***	State ***ND***	ZIP Code ***58622***

County ***Billings***	Latitude (Nearest Second) ***46°52'45"N***	Longitude (Nearest Second) ***103°14'55" W***

Legal Description of Facility Site ***Property ID 07 0000 00165 000 in the SE 1/4 of Section 2, Twp 139N, Range 100W and Property ID: 07 0000 00162 000 in the NW1/4 and SW 1/4 of Section 1, Twp 139N, Range 100W***	Land Area at Facility Site ***261 Acres***	MSL Elevation at Facility ***2,685 feet***

SECTION B – EQUIPMENT

Source ID No. (From form SFN 8516) ***114-H-1401***	Name of Manufacturer ***TBD***
Rated Capacity/Maximum Input ***TBD***	Model Number ***TBD***
Purpose Space Heat _____% Process Heat ***100***%	Power Generation _____% Other (Specify % if Multi Purpose) _____%

SECTION C – TYPE OF COMBUSTION UNIT AND FUEL FEEDING METHOD

Coal (If other solid fuel, specify here) ☐Pulverized ☐General ☐Dry Bottom ☐Wet Bottom with Fly Ash Reinjection ☐Wet Bottom without Fly Ash Reinjection ☐Other – Specify:	☐Spreader Stoker with Fly Ash Reinjection ☐Spreader Stoker without Fly Ash Reinjection ☐Fluidized Bed ☐Cyclone ☐Hand-Fired
Fuel Oil ☐Horizontally Fired ☐Tangentially Fired ☐Other – Specify:	Gas ☐Horizontally Fired ☐Tangentially Fired ☐Other – Specify: ***TBD***

SECTION D – NORMAL SCHEDULE OF OPERATION

Hours Per Day	Days Per Week	Weeks Per Year	Hours Per Year Total	Peak Season (Specify Months)
24	***7***	***52***	***8760***	***N/A***

SECTION E – FUEL USE EXPECTED IN A CALENDAR YEAR

Year ***2017-2018***					
Primary Fuels			Standby Fuels		
Type ***Fuel Gas***			Type ***None***		
Quantity Per Year ***5,545,080***	Units of Measure ***lb/yr***		Quantity Per Year	Units of Measure	
Percent Ash (Solid Fuels Only)					
Minimum	Maximum	Average	Minimum	Maximum	Average
Percent Sulfur					
Minimum ***0***	Maximum ***0***	Average ***0***	Minimum	Maximum	Average
Btu Per Unit of Measure (e.g. lb, gal, etc. - Specify)					
Minimum ***TBD***	Maximum ***TBD***	Average ***27,614.53***	Minimum	Maximum	Average
Describe Fuel Transport and Storage Methods: ***N/A, fuel gas to be generated within the refinery***					

SECTION F – COMBUSTION AIR

☐Natural Draft ☐Induced ☐Forced ☐Other – Specify: ***TBD***

SECTION G – STACK DATA

Inside Diameter (ft) ***3***	Height Above Grade (ft) ***91***
Gas Temperature at Exit (Avg. °F) ***784.3***	Gas Velocity at Exit (Avg. ft/sec) ***20.5***
Are Emission Control Devices in Place? If YES – Complete SFN 8532 ☒ Yes ☐No	
Stack Exit Gas Flow Rate	
Average (ACFM) ***8,699.78***	Average (DSCFM) ***TBD***
Maximum (ACFM) ***TBD***	Maximum (DSCFM) ***TBD***
Are sampling ports available? ☐No ☒ Yes – Describe:	

SECTION H – NEARBY BUILDINGS

Attach drawings which show the plan and elevation views of any nearby buildings including the building that houses the fuel-fired equipment.
Plant layout drawings attached to this permit application.

SECTION I – AIR CONTAMINANTS EMITTED

Pollutant	Maximum Pounds Per Hour	Tons Per Year
PM_{10} Total	***6,99E-02***	***3,06E-01***
PM_{10} Filterable	***1,75E-02***	***7,66E-02***
$PM_{2.5}$ Total	***6,99E-02***	***3,06E-01***
$PM_{2.5}$ Filterable	***1,75E-02***	***7,66E-02***
$PM_{2.5}$ Condensable	***5,24E-02***	***2,30E-01***
Sulfur Dioxide	***1,03E-02***	***4,50E-02***
Nitrogen Oxides	***5,24E-01***	***2,30E+00***
Carbon Monoxide	***4,89E-01***	***2,14E+00***
Greenhouse Gases (CO2e)	***N/A***	
Other – Specify		
Lead	***8,57E-06***	***3,75E-05***
Metal HAP (Total)	***1,28E-04***	***5,60E-04***
Organic HAPs (Total)	***8,55E-03***	***3,74E-02***
VOC	***9,43E-02***	***4,13E-01***

Basis and Calculations for Quantities:
Engineering data and Emission factors from Table 1.4-2. AP 42, Chapter 1: External Combustion Sources. See Document P-5715043-01-001-18042-I001 "EMISSIONS INVENTORY" and P-5715043-01-001-18035-I001 "BACT Analysis"

Signature of Applicant	Date
Tom Williams	09/26/2016

SEND COMPLETED APPLICATION AND ALL ATTACHMENTS TO:

North Dakota Department of Health
Division of Air Quality
918 E Divide Ave., 2nd Floor
Bismarck, ND 58501-1947
(701) 328-5188

PERMIT APPLICATION FOR
FUEL BURNING EQUIPMENT FOR INDIRECT HEATING

NORTH DAKOTA DEPARTMENT OF HEALTH
DIVISION OF AIR QUALITY
SFN 8518 (09-12)

SECTION A – FACILITY INFORMATION

Name of Firm or Organization ***Meridian Energy Group – Davis Refinery***		
Contact Person for Air Pollution Matters ***Tom Johnson***		
Title ***Vice President of Operations***	Telephone Number ***(409)795-0792***	E-mail Address ***tjohnson@meridianenergygroup.inc***
Applicant´s Name ***Tom Williams***		
Title ***VP of Planning & Permitting***	Telephone Number ***(707) 299-0182***	E-mail Address ***twilliams@meridianenergygroup.inc***
Mailing Address (Street & No.) ***2062 Business Center Drive, Suite 115***		
City ***Irvine***	State ***CA***	ZIP Code ***92612***
Facility Address (Street & No.) ***37th Street***		
City ***Belfield***	State ***ND***	ZIP Code ***58622***

Country ***USA***	Latitude (Nearest Second) ***46°52'45"N***	Longitude (Nearest Second) ***103°14'55" W***

Legal Description of Facility Site ***Property ID 07 0000 00165 000 in the SE 1/4 of Section 2, Twp 139N, Range 100W and Property ID: 07 0000 00162 000 in the NW1/4 and SW 1/4 of Section 1, Twp 139N, Range 100W***	Land Area at Facility Site ***261 Acres***	MSL Elevation at Facility ***2,685 feet***

SECTION B – EQUIPMENT

Source ID No. (From form SFN 8516) ***117-H-1701***	Name of Manufacturer ***TBD***
Rated Capacity/Maximum Input ***TBD***	Model Number ***TBD***
Purpose Space Heat _____% Process Heat ***100***%	Power Generation _____% Other (Specify % if Multi Purpose) _____%

SECTION C – TYPE OF COMBUSTION UNIT AND FUEL FEEDING METHOD

Coal (If other solid fuel, specify here) ☐Pulverized ☐General ☐Dry Bottom ☐Wet Bottom with Fly Ash Reinjection ☐Wet Bottom without Fly Ash Reinjection ☐Other – Specify:	☐Spreader Stoker with Fly Ash Reinjection ☐Spreader Stoker without Fly Ash Reinjection ☐Fluidized Bed ☐Cyclone ☐Hand-Fired
Fuel Oil ☐Horizontally Fired ☐Tangentially Fired ☐Other – Specify:	Gas ☐Horizontally Fired ☐Tangentially Fired ☐Other – Specify: ***TBD***

SECTION D – NORMAL SCHEDULE OF OPERATION

Hours Per Day	Days Per Week	Weeks Per Year	Hours Per Year Total	Peak Season (Specify Months)
24	***7***	***52***	***8760***	***N/A***

SECTION E – FUEL USE EXPECTED IN A CALENDAR YEAR

Year ***2017-2018***					
Primary Fuels			Standby Fuels		
Type ***Fuel Gas***			Type ***none***		
Quantity Per Year ***523,848***	Units of Measure ***lb/yr***		Quantity Per Year	Units of Measure	
Percent Ash (Solid Fuels Only)					
Minimum	Maximum	Average	Minimum	Maximum	Average
Percent Sulfur					
Minimum ***0***	Maximum ***0***	Average ***0***	Minimum	Maximum	Average
Btu Per Unit of Measure (e.g. lb, gal, etc. - Specify)					
Minimum ***TBD***	Maximum ***TBD***	Average ***27,591.97***	Minimum	Maximum	Average
Describe Fuel Transport and Storage Methods: ***N/A, fuel gas to be generated within the refinery***					

SECTION F – COMBUSTION AIR

☐Natural Draft ☐Induced ☐Forced ☐Other – Specify: ***TBD***

SECTION G – STACK DATA

Inside Diameter (ft) ***2.7***	Height Above Grade (ft) ***36***
Gas Temperature at Exit (Avg. °F) ***823.8***	Gas Velocity at Exit (Avg. ft/sec) ***2.5***
Are Emission Control Devices in Place? If YES – Complete SFN 8532 ☒ Yes ☐No	
Stack Exit Gas Flow Rate	
Average (ACFM) ***852.56***	Average (DSCFM) ***TBD***
Maximum (ACFM) ***TBD***	Maximum (DSCFM) ***TBD***
Are sampling ports available? ☐No ☒ Yes – Describe:	

SECTION H – NEARBY BUILDINGS

Attach drawings which show the plan and elevation views of any nearby buildings including the building that houses the fuel-fired equipment.
Plant layout drawings attached to this permit application.

SECTION I – AIR CONTAMINANTS EMITTED

Pollutant	Maximum Pounds Per Hour	Tons Per Year
PM_{10} Total	***6,60E-03***	***2,89E-02***
PM_{10} Filterable	***1,65E-03***	***7,23E-03***
$PM_{2.5}$ Total	***6,60E-03***	***2,89E-02***
$PM_{2.5}$ Filterable	***1,65E-03***	***7,23E-03***
$PM_{2.5}$ Condensable	***4,95E-03***	***2,17E-02***
Sulfur Dioxide	***9,71E-04***	***4,25E-03***
Nitrogen Oxides	***4,95E-02***	***2,17E-01***
Carbon Monoxide	***4,62E-02***	***2,02E-01***
Greenhouse Gases (CO2e)	***N/A***	
Other – Specify		
Lead	***8,09E-07***	***3,54E-06***
Metal HAP (Total)	***1,21E-05***	***5,28E-05***
Organic HAPs (Total)	***8,07E-04***	***3,53E-03***
VOC	***8,90E-03***	***3,90E-02***

Basis and Calculations for Quantities:
Engineering data and Emission factors from Table 1.4-2. AP 42, Chapter 1: External Combustion Sources. See Document P-5715043-01-001-18042-I001 "EMISSIONS INVENTORY" and P-5715043-01-001-18035-I001 "BACT Analysis"

Signature of Applicant	Date
	09/26/2016

SEND COMPLETED APPLICATION AND ALL ATTACHMENTS TO:

North Dakota Department of Health
Division of Air Quality
918 E Divide Ave., 2nd Floor
Bismarck, ND 58501-1947
(701) 328-5188

PERMIT APPLICATION FOR
FUEL BURNING EQUIPMENT FOR INDIRECT HEATING

NORTH DAKOTA DEPARTMENT OF HEALTH
DIVISION OF AIR QUALITY
SFN 8518 (09-12)

SECTION A – FACILITY INFORMATION

Name of Firm or Organization ***Meridian Energy Group – Davis Refinery***		
Contact Person for Air Pollution Matters ***Tom Johnson***		
Title ***Vice President of Operations***	Telephone Number ***(409)795-0792***	E-mail Address ***tjohnson@meridianenergygroup.inc***
Applicant´s Name ***Tom Williams***		
Title ***VP of Planning & Permitting***	Telephone Number ***(707) 299-0182***	E-mail Address ***twilliams@meridianenergygroup.inc***
Mailing Address (Street & No.) ***2062 Business Center Drive, Suite 115***		
City ***Irvine***	State ***CA***	ZIP Code ***92612***
Facility Address (Street & No.) ***37th Street***		
City ***Belfield***	State ***ND***	ZIP Code ***58622***

County ***Billings***	Latitude (Nearest Second) ***46°52'45"N***	Longitude (Nearest Second) ***103°14'55" W***

Legal Description of Facility Site ***Property ID 07 0000 00165 000 in the SE 1/4 of Section 2, Twp 139N, Range 100W and Property ID: 07 0000 00162 000 in the NW1/4 and SW 1/4 of Section 1, Twp 139N, Range 100W***	Land Area at Facility Site ***261 Acres***	MSL Elevation at Facility ***2,685 feet***

SECTION B – EQUIPMENT

Source ID No. (From form SFN 8516) ***117-H-1702***	Name of Manufacturer ***TBD***
Rated Capacity/Maximum Input ***TBD***	Model Number ***TBD***
Purpose Space Heat _____% Process Heat ***100***%	Power Generation _____% Other (Specify % if Multi Purpose) _____%

SECTION C – TYPE OF COMBUSTION UNIT AND FUEL FEEDING METHOD

Coal (If other solid fuel, specify here) ☐Pulverized ☐General ☐Dry Bottom ☐Wet Bottom with Fly Ash Reinjection ☐Wet Bottom without Fly Ash Reinjection ☐Other – Specify:	☐Spreader Stoker with Fly Ash Reinjection ☐Spreader Stoker without Fly Ash Reinjection ☐Fluidized Bed ☐Cyclone ☐Hand-Fired
Fuel Oil ☐Horizontally Fired ☐Tangentially Fired ☐Other – Specify:	Gas ☐Horizontally Fired ☐Tangentially Fired ☐Other – Specify: ***TBD***

SECTION D – NORMAL SCHEDULE OF OPERATION

Hours Per Day	Days Per Week	Weeks Per Year	Hours Per Year Total	Peak Season (Specify Months)
24	***7***	***52***	***8760***	***N/A***

SECTION E – FUEL USE EXPECTED IN A CALENDAR YEAR

Year ***2017-2018***					
Primary Fuels			Standby Fuels		
Type ***Fuel Gas***			Type ***None***		
Quantity Per Year ***1,191,360***	Units of Measure ***lb/yr***		Quantity Per Year	Units of Measure	
Percent Ash (Solid Fuels Only)					
Minimum	Maximum	Average	Minimum	Maximum	Average
Percent Sulfur					
Minimum ***0***	Maximum ***0***	Average ***0***	Minimum	Maximum	Average
Btu Per Unit of Measure (e.g. lb, gal, etc. - Specify)					
Minimum ***TBD***	Maximum ***TBD***	Average ***27,573.53***	Minimum	Maximum	Average
Describe Fuel Transport and Storage Methods: ***N/A, fuel gas to be generated within the refinery***					

SECTION F – COMBUSTION AIR

☐Natural Draft ☐Induced ☐Forced ☐Other – Specify: ***TBD***

SECTION G – STACK DATA

Inside Diameter (ft) ***4.6***	Height Above Grade (ft) ***46***
Gas Temperature at Exit (Avg. °F) ***787.7***	Gas Velocity at Exit (Avg. ft/sec) ***1.9***
Are Emission Control Devices in Place? If YES – Complete SFN 8532 ☒ Yes ☐No	
Stack Exit Gas Flow Rate	
Average (ACFM) ***1,872.75***	Average (DSCFM) ***TBD***
Maximum (ACFM) ***TBD***	Maximum (DSCFM) ***TBD***
Are sampling ports available? ☐No ☒ Yes – Describe:	

SECTION H – NEARBY BUILDINGS

Attach drawings which show the plan and elevation views of any nearby buildings including the building that houses the fuel-fired equipment.
Plant layout drawings attached to this permit application.

SECTION I – AIR CONTAMINANTS EMITTED

Pollutant	Maximum Pounds Per Hour	Tons Per Year
PM_{10} Total	***1,50E-02***	***6,57E-02***
PM_{10} Filterable	***3,75E-03***	***1,64E-02***
$PM_{2.5}$ Total	***1,50E-02***	***6,57E-02***
$PM_{2.5}$ Filterable	***3,75E-03***	***1,64E-02***
$PM_{2.5}$ Condensable	***1,13E-02***	***4,93E-02***
Sulfur Dioxide	***2,21E-03***	***9,66E-03***
Nitrogen Oxides	***1,13E-01***	***4,93E-01***
Carbon Monoxide	***1,05E-01***	***4,60E-01***
Greenhouse Gases (CO2e)	***N/A***	
Other – Specify		
Lead	***1,84E-06***	***8,05E-06***
Metal HAP (Total)	***2,74E-05***	***1,20E-04***
Organic HAPs (Total)	***1,83E-03***	***8,03E-03***
VOC	***2,02E-02***	***8,86E-02***

Basis and Calculations for Quantities:
Engineering data and Emission factors from Table 1.4-2. AP 42, Chapter 1: External Combustion Sources. See Document P-5715043-01-001-18042-I001 "EMISSIONS INVENTORY" and P-5715043-01-001-18035-I001 "BACT Analysis"

Signature of Applicant	Date
	09/26/2016

SEND COMPLETED APPLICATION AND ALL ATTACHMENTS TO:

North Dakota Department of Health
Division of Air Quality
918 E Divide Ave., 2nd Floor
Bismarck, ND 58501-1947
(701) 328-5188

PERMIT APPLICATION FOR
FUEL BURNING EQUIPMENT FOR INDIRECT HEATING

NORTH DAKOTA DEPARTMENT OF HEALTH
DIVISION OF AIR QUALITY
SFN 8518 (09-12)

SECTION A – FACILITY INFORMATION

Name of Firm or Organization ***Meridian Energy Group – Davis Refinery***		
Contact Person for Air Pollution Matters ***Tom Johnson***		
Title ***Vice President of Operations***	Telephone Number ***(409)795-0792***	E-mail Address ***tjohnson@meridianenergygroup.inc***
Applicant´s Name ***Tom Williams***		
Title ***VP of Planning & Permitting***	Telephone Number ***(707) 299-0182***	E-mail Address ***twilliams@meridianenergygroup.inc***
Mailing Address (Street & No.) ***2062 Business Center Drive, Suite 115***		
City ***Irvine***	State ***CA***	ZIP Code ***92612***
Facility Address (Street & No.) ***37th Street***		
City ***Belfield***	State ***ND***	ZIP Code ***58622***

County ***Billings***	Latitude (Nearest Second) ***46°52'45"N***	Longitude (Nearest Second) ***103°14'55" W***

Legal Description of Facility Site ***Property ID 07 0000 00165 000 in the SE 1/4 of Section 2, Twp 139N, Range 100W and Property ID: 07 0000 00162 000 in the NW1/4 and SW 1/4 of Section 1, Twp 139N, Range 100W***	Land Area at Facility Site ***261 Acres***	MSL Elevation at Facility ***2,685 feet***

SECTION B – EQUIPMENT

Source ID No. (From form SFN 8516) ***118-H-1801***	Name of Manufacturer ***TBD***
Rated Capacity/Maximum Input ***TBD***	Model Number ***TBD***
Purpose Space Heat _____% Process Heat ***100***%	Power Generation _____% Other (Specify % if Multi Purpose) _____%

SECTION C – TYPE OF COMBUSTION UNIT AND FUEL FEEDING METHOD

Coal (If other solid fuel, specify here) ☐Pulverized ☐General ☐Dry Bottom ☐Wet Bottom with Fly Ash Reinjection ☐Wet Bottom without Fly Ash Reinjection ☐Other – Specify:	☐Spreader Stoker with Fly Ash Reinjection ☐Spreader Stoker without Fly Ash Reinjection ☐Fluidized Bed ☐Cyclone ☐Hand-Fired
Fuel Oil ☐Horizontally Fired ☐Tangentially Fired ☐Other – Specify:	Gas ☐Horizontally Fired ☐Tangentially Fired ☐Other – Specify: ***TBD***

SECTION D – NORMAL SCHEDULE OF OPERATION

Hours Per Day	Days Per Week	Weeks Per Year	Hours Per Year Total	Peak Season (Specify Months)
24	***7***	***52***	***8760***	***N/A***

SECTION E – FUEL USE EXPECTED IN A CALENDAR YEAR

Year ***2017-2018***					
Primary Fuels			Standby Fuels		
Type ***Fuel Gas***			Type ***None***		
Quantity Per Year ***10,322,784***	Units of Measure ***lb/yr***		Quantity Per Year	Units of Measure	
Percent Ash (Solid Fuels Only)					
Minimum	Maximum	Average	Minimum	Maximum	Average
Percent Sulfur					
Minimum ***0***	Maximum ***0***	Average ***0***	Minimum	Maximum	Average
Btu Per Unit of Measure (e.g. lb, gal, etc. - Specify)					
Minimum ***TBD***	Maximum ***TBD***	Average ***71,444.33***	Minimum	Maximum	Average
Describe Fuel Transport and Storage Methods: ***N/A, fuel gas to be generated within the refinery***					

SECTION F – COMBUSTION AIR

☐Natural Draft ☐Induced ☐Forced ☐Other – Specify: ***TBD***

SECTION G – STACK DATA

Inside Diameter (ft) ***4***	Height Above Grade (ft) ***95***
Gas Temperature at Exit (Avg. °F) ***785.5***	Gas Velocity at Exit (Avg. ft/sec) ***22.4***
Are Emission Control Devices in Place? If YES – Complete SFN 8532 ☒ Yes ☐No	
Stack Exit Gas Flow Rate	
Average (ACFM) ***16,894.20***	Average (DSCFM) ***TBD***
Maximum (ACFM) ***TBD***	Maximum (DSCFM) ***TBD***
Are sampling ports available? ☐No ☒ Yes – Describe:	

SECTION H – NEARBY BUILDINGS

Attach drawings which show the plan and elevation views of any nearby buildings including the building that houses the fuel-fired equipment.
Plant layout drawings attached to this permit application.

SECTION I – AIR CONTAMINANTS EMITTED

Pollutant	Maximum Pounds Per Hour	Tons Per Year
PM_{10} Total	***3,37E-01***	***1,48E+00***
PM_{10} Filterable	***8,42E-02***	***3,69E-01***
$PM_{2.5}$ Total	***3,37E-01***	***1,48E+00***
$PM_{2.5}$ Filterable	***8,42E-02***	***3,69E-01***
$PM_{2.5}$ Condensable	***2,53E-01***	***1,11E+00***
Sulfur Dioxide	***4,95E-02***	***2,17E-01***
Nitrogen Oxides	***5,30E-01***	***2,32E+00***
Carbon Monoxide	***2,36E+00***	***1,03E+01***
Greenhouse Gases (CO2e)	***N/A***	
Other – Specify		
Lead	***4,13E-05***	***1,81E-04***
Metal HAP (Total)	***6,16E-04***	***2,70E-03***
Organic HAPs (Total)	***4,12E-02***	***1,80E-01***
VOC	***4,54E-01***	***1,99E+00***

Basis and Calculations for Quantities:
Engineering data and Emission factors from Table 1.4-2. AP 42, Chapter 1: External Combustion Sources. See Document P-5715043-01-001-18042-I001 "EMISSIONS INVENTORY" and P-5715043-01-001-18035-I001 "BACT Analysis"

Signature of Applicant	Date
	09/26/2016

SEND COMPLETED APPLICATION AND ALL ATTACHMENTS TO:

North Dakota Department of Health
Division of Air Quality
918 E Divide Ave., 2nd Floor
Bismarck, ND 58501-1947
(701) 328-5188

PERMIT APPLICATION FOR
FUEL BURNING EQUIPMENT FOR INDIRECT HEATING

NORTH DAKOTA DEPARTMENT OF HEALTH
DIVISION OF AIR QUALITY
SFN 8518 (09-12)

SECTION A – FACILITY INFORMATION

Name of Firm or Organization ***Meridian Energy Group – Davis Refinery***		
Contact Person for Air Pollution Matters ***Tom Johnson***		
Title ***Vice President of Operations***	Telephone Number ***(409)795-0792***	E-mail Address ***tjohnson@meridianenergygroup.inc***
Applicant´s Name ***Tom Williams***		
Title ***VP of Planning & Permitting***	Telephone Number ***(707) 299-0182***	E-mail Address ***twilliams@meridianenergygroup.inc***
Mailing Address (Street & No.) ***2062 Business Center Drive, Suite 115***		
City ***Irvine***	State ***CA***	ZIP Code ***92612***
Facility Address (Street & No.) ***37th Street***		
City ***Belfield***	State ***ND***	ZIP Code ***58622***

County ***Billings***	Latitude (Nearest Second) ***46°52'45"N***	Longitude (Nearest Second) ***103°14'55" W***

Legal Description of Facility Site ***Property ID 07 0000 00165 000 in the SE 1/4 of Section 2, Twp 139N, Range 100W and Property ID: 07 0000 00162 000 in the NW1/4 and SW 1/4 of Section 1, Twp 139N, Range 100W***	Land Area at Facility Site ***261 Acres***	MSL Elevation at Facility ***2,685 feet***

SECTION B – EQUIPMENT

Source ID No. (From form SFN 8516) ***125-H-2501***	Name of Manufacturer ***TBD***
Rated Capacity/Maximum Input ***TBD***	Model Number ***TBD***
Purpose Space Heat _____% Process Heat ***100***%	Power Generation _____% Other (Specify % if Multi Purpose) _____%

SECTION C – TYPE OF COMBUSTION UNIT AND FUEL FEEDING METHOD

Coal (If other solid fuel, specify here) ☐Pulverized ☐General ☐Dry Bottom ☐Wet Bottom with Fly Ash Reinjection ☐Wet Bottom without Fly Ash Reinjection ☐Other – Specify:	☐Spreader Stoker with Fly Ash Reinjection ☐Spreader Stoker without Fly Ash Reinjection ☐Fluidized Bed ☐Cyclone ☐Hand-Fired
Fuel Oil ☐Horizontally Fired ☐Tangentially Fired ☐Other – Specify:	Gas ☐Horizontally Fired ☐Tangentially Fired ☐Other – Specify: ***TBD***

SECTION D – NORMAL SCHEDULE OF OPERATION

Hours Per Day	Days Per Week	Weeks Per Year	Hours Per Year Total	Peak Season (Specify Months)
24	***7***	***52***	***8760***	***N/A***

SECTION E – FUEL USE EXPECTED IN A CALENDAR YEAR

Year ***2017-2018***					
Primary Fuels			Standby Fuels		
Type ***Fuel Gas***			Type ***None***		
Quantity Per Year ***5,317,320***	Units of Measure ***lb/yr***		Quantity Per Year	Units of Measure	
Percent Ash (Solid Fuels Only)					
Minimum	Maximum	Average	Minimum	Maximum	Average
Percent Sulfur					
Minimum ***0***	Maximum ***0***	Average ***0***	Minimum	Maximum	Average
Btu Per Unit of Measure (e.g. lb, gal, etc. - Specify)					
Minimum ***TBD***	Maximum ***TBD***	Average ***20,593.08***	Minimum	Maximum	Average
Describe Fuel Transport and Storage Methods: ***N/A, fuel gas to be generated within the refinery***					

SECTION F – COMBUSTION AIR

☐Natural Draft ☐Induced ☐Forced ☐Other – Specify: ***TBD***

SECTION G – STACK DATA

Inside Diameter (ft) ***2.5***	Height Above Grade (ft) ***96***
Gas Temperature at Exit (Avg. °F) ***764.3***	Gas Velocity at Exit (Avg. ft/sec) ***21.9***
Are Emission Control Devices in Place? If YES – Complete SFN 8532 ☒ Yes ☐No	
Stack Exit Gas Flow Rate	
Average (ACFM) ***6,224.68***	Average (DSCFM) ***TBD***
Maximum (ACFM) ***TBD***	Maximum (DSCFM) ***TBD***
Are sampling ports available? ☐No ☒ Yes – Describe:	

SECTION H – NEARBY BUILDINGS

Attach drawings which show the plan and elevation views of any nearby buildings including the building that houses the fuel-fired equipment.
Plant layout drawings attached to this permit application.

SECTION I – AIR CONTAMINANTS EMITTED

Pollutant	Maximum Pounds Per Hour	Tons Per Year
PM_{10} Total	***5,00E-02***	***2,19E-01***
PM_{10} Filterable	***1,25E-02***	***5,48E-02***
$PM_{2.5}$ Total	***5,00E-02***	***2,19E-01***
$PM_{2.5}$ Filterable	***1,25E-02***	***5,48E-02***
$PM_{2.5}$ Condensable	***3,75E-02***	***1,64E-01***
Sulfur Dioxide	***7,35E-03***	***3,22E-02***
Nitrogen Oxides	***3,75E-01***	***1,64E+00***
Carbon Monoxide	***3,50E-01***	***1,53E+00***
Greenhouse Gases (CO2e)	***N/A***	
Other – Specify		
Lead	***6,13E-06***	***2,68E-05***
Metal HAP (Total)	***9,14E-05***	***4,00E-04***
Organic HAPs (Total)	***6,11E-03***	***2,68E-02***
VOC	***6,74E-02***	***2,95E-01***

Basis and Calculations for Quantities:
Engineering data and Emission factors from Table 1.4-2. AP 42, Chapter 1: External Combustion Sources. See Document P-5715043-01-001-18042-I001 "EMISSIONS INVENTORY" and P-5715043-01-001-18035-I001 "BACT Analysis"

Signature of Applicant	Date
Jon Wilkens	09/26/2016

SEND COMPLETED APPLICATION AND ALL ATTACHMENTS TO:

North Dakota Department of Health
Division of Air Quality
918 E Divide Ave., 2nd Floor
Bismarck, ND 58501-1947
(701) 328-5188

PERMIT APPLICATION FOR
FUEL BURNING EQUIPMENT FOR INDIRECT HEATING

NORTH DAKOTA DEPARTMENT OF HEALTH
DIVISION OF AIR QUALITY
SFN 8518 (09-12)

SECTION A – FACILITY INFORMATION

Name of Firm or Organization ***Meridian Energy Group – Davis Refinery***		
Contact Person for Air Pollution Matters ***Tom Johnson***		
Title ***Vice President of Operations***	Telephone Number ***(409)795-0792***	E-mail Address ***tjohnson@meridianenergygroup.inc***
Applicant´s Name ***Tom Williams***		
Title ***VP of Planning & Permitting***	Telephone Number ***(707) 299-0182***	E-mail Address ***twilliams@meridianenergygroup.inc***
Mailing Address (Street & No.) ***2062 Business Center Drive, Suite 115***		
City ***Irvine***	State ***CA***	ZIP Code ***92612***
Facility Address (Street & No.) ***37th Street***		
City ***Belfield***	State ***ND***	ZIP Code ***58622***

County ***Billings***	Latitude (Nearest Second) ***46°52'45"N***	Longitude (Nearest Second) ***103°14'55" W***

Legal Description of Facility Site ***Property ID 07 0000 00165 000 in the SE 1/4 of Section 2, Twp 139N, Range 100W and Property ID: 07 0000 00162 000 in the NW1/4 and SW 1/4 of Section 1, Twp 139N, Range 100W***	Land Area at Facility Site ***261 Acres***	MSL Elevation at Facility ***2,685 feet***

SECTION B – EQUIPMENT

Source ID No. (From form SFN 8516) ***202-PK-0201A***	Name of Manufacturer ***TBD***
Rated Capacity/Maximum Input ***TBD***	Model Number ***TBD***
Purpose Space Heat _____% Process Heat ***100*** %	Power Generation _____% Other (Specify % if Multi Purpose) _____%

SECTION C – TYPE OF COMBUSTION UNIT AND FUEL FEEDING METHOD

Coal (If other solid fuel, specify here) ☐Pulverized ☐General ☐Dry Bottom ☐Wet Bottom with Fly Ash Reinjection ☐Wet Bottom without Fly Ash Reinjection ☐Other – Specify:	☐Spreader Stoker with Fly Ash Reinjection ☐Spreader Stoker without Fly Ash Reinjection ☐Fluidized Bed ☐Cyclone ☐Hand-Fired
Fuel Oil ☐Horizontally Fired ☐Tangentially Fired ☐Other – Specify:	Gas ☐Horizontally Fired ☐Tangentially Fired ☐Other – Specify: ***TBD***

SECTION D – NORMAL SCHEDULE OF OPERATION

Hours Per Day	Days Per Week	Weeks Per Year	Hours Per Year Total	Peak Season (Specify Months)
24	***7***	***52***	***8760***	***N/A***

SECTION E – FUEL USE EXPECTED IN A CALENDAR YEAR

Year ***2017-2018***					
Primary Fuels			Standby Fuels		
Type ***Fuel Gas***			Type ***None***		
Quantity Per Year ***20,144,496***	Units of Measure ***lb/yr***		Quantity Per Year	Units of Measure	
Percent Ash (Solid Fuels Only)					
Minimum	Maximum	Average	Minimum	Maximum	Average
Percent Sulfur					
Minimum ***0***	Maximum ***0***	Average ***0***	Minimum	Maximum	Average
Btu Per Unit of Measure (e.g. lb, gal, etc. - Specify)					
Minimum ***TBD***	Maximum ***TBD***	Average ***26,091.49***	Minimum	Maximum	Average
Describe Fuel Transport and Storage Methods: ***N/A, fuel gas to be generated within the refinery***					

SECTION F – COMBUSTION AIR

☐Natural Draft ☐Induced ☐Forced ☐Other – Specify: ***TBD***

SECTION G – STACK DATA

Inside Diameter (ft) ***3***	Height Above Grade (ft) ***100***
Gas Temperature at Exit (Avg. °F) ***294.2***	Gas Velocity at Exit (Avg. ft/sec) ***93.9***
Are Emission Control Devices in Place? If YES – Complete SFN 8532 ☒ Yes ☐No	
Stack Exit Gas Flow Rate	
Average (ACFM) ***19,914.80***	Average (DSCFM) ***TBD***
Maximum (ACFM) ***TBD***	Maximum (DSCFM) ***TBD***
Are sampling ports available? ☐No ☒ Yes – Describe:	

SECTION H – NEARBY BUILDINGS

Attach drawings which show the plan and elevation views of any nearby buildings including the building that houses the fuel-fired equipment.
Plant layout drawings attached to this permit application.

SECTION I – AIR CONTAMINANTS EMITTED

Pollutant	Maximum Pounds Per Hour	Tons Per Year
PM_{10} Total	***2,40E-01***	***1,05E+00***
PM_{10} Filterable	***6,00E-02***	***2,63E-01***
$PM_{2.5}$ Total	***2,40E-01***	***1,05E+00***
$PM_{2.5}$ Filterable	***6,00E-02***	***2,63E-01***
$PM_{2.5}$ Condensable	***1,80E-01***	***7,88E-01***
Sulfur Dioxide	***3,53E-02***	***1,55E-01***
Nitrogen Oxides	***1,80E+00***	***7,88E+00***
Carbon Monoxide	***1,68E+00***	***7,36E+00***
Greenhouse Gases (CO2e)	***N/A***	
Other – Specify		
Lead	***2,94E-05***	***1,29E-04***
Metal HAP (Total)	***4,39E-04***	***1,92E-03***
Organic HAPs (Total)	***2,93E-02***	***1,28E-01***
VOC	***3,24E-01***	***1,42E+00***

Basis and Calculations for Quantities:
Engineering data and Emission factors from Table 1.4-2. AP 42, Chapter 1: External Combustion Sources. See Document P-5715043-01-001-18042-I001 "EMISSIONS INVENTORY" and P-5715043-01-001-18035-I001 "BACT Analysis"

Signature of Applicant	Date
Tom Williams	09/26/2016

SEND COMPLETED APPLICATION AND ALL ATTACHMENTS TO:

North Dakota Department of Health
Division of Air Quality
918 E Divide Ave., 2nd Floor
Bismarck, ND 58501-1947
(701) 328-5188

PERMIT APPLICATION FOR
FUEL BURNING EQUIPMENT FOR INDIRECT HEATING

NORTH DAKOTA DEPARTMENT OF HEALTH
DIVISION OF AIR QUALITY
SFN 8518 (09-12)

SECTION A – FACILITY INFORMATION

Name of Firm or Organization ***Meridian Energy Group – Davis Refinery***		
Contact Person for Air Pollution Matters ***Tom Johnson***		
Title ***Vice President of Operations***	Telephone Number ***(409)795-0792***	E-mail Address ***tjohnson@meridianenergygroup.inc***
Applicant´s Name ***Tom Williams***		
Title ***VP of Planning & Permitting***	Telephone Number ***(707) 299-0182***	E-mail Address ***twilliams@meridianenergygroup.inc***
Mailing Address (Street & No.) ***2062 Business Center Drive, Suite 115***		
City ***Irvine***	State ***CA***	ZIP Code ***92612***
Facility Address (Street & No.) ***37th Street***		
City ***Belfield***	State ***ND***	ZIP Code ***58622***

County ***Billings***	Latitude (Nearest Second) ***46°52'45"N***	Longitude (Nearest Second) ***103°14'55" W***

Legal Description of Facility Site ***Property ID 07 0000 00165 000 in the SE 1/4 of Section 2, Twp 139N, Range 100W and Property ID: 07 0000 00162 000 in the NW1/4 and SW 1/4 of Section 1, Twp 139N, Range 100W***	Land Area at Facility Site ***261 Acres***	MSL Elevation at Facility ***2,685 feet***

SECTION B – EQUIPMENT

Source ID No. (From form SFN 8516) ***202-PK-0201B***	Name of Manufacturer ***TBD***
Rated Capacity/Maximum Input ***TBD***	Model Number ***TBD***
Purpose Space Heat _____% Process Heat ***100*** %	Power Generation _____% Other (Specify % if Multi Purpose) _____%

SECTION C – TYPE OF COMBUSTION UNIT AND FUEL FEEDING METHOD

Coal (If other solid fuel, specify here) ☐Pulverized ☐General ☐Dry Bottom ☐Wet Bottom with Fly Ash Reinjection ☐Wet Bottom without Fly Ash Reinjection ☐Other – Specify:	☐Spreader Stoker with Fly Ash Reinjection ☐Spreader Stoker without Fly Ash Reinjection ☐Fluidized Bed ☐Cyclone ☐Hand-Fired
Fuel Oil ☐Horizontally Fired ☐Tangentially Fired ☐Other – Specify:	Gas ☐Horizontally Fired ☐Tangentially Fired ☐Other – Specify: ***TBD***

SECTION D – NORMAL SCHEDULE OF OPERATION

Hours Per Day	Days Per Week	Weeks Per Year	Hours Per Year Total	Peak Season (Specify Months)
24	***7***	***52***	***8760***	***N/A***

SECTION E – FUEL USE EXPECTED IN A CALENDAR YEAR

Year ***2017-2018***					
Primary Fuels			Standby Fuels		
Type ***Fuel Gas***			Type ***None***		
Quantity Per Year ***20,144,496***	Units of Measure ***lb/yr***		Quantity Per Year	Units of Measure	
Percent Ash (Solid Fuels Only)					
Minimum	Maximum	Average	Minimum	Maximum	Average
Percent Sulfur					
Minimum ***0***	Maximum ***0***	Average ***0***	Minimum	Maximum	Average
Btu Per Unit of Measure (e.g. lb, gal, etc. - Specify)					
Minimum ***TBD***	Maximum ***TBD***	Average ***26,091.49***	Minimum	Maximum	Average
Describe Fuel Transport and Storage Methods: ***N/A, fuel gas to be generated within the refinery***					

SECTION F – COMBUSTION AIR

☐Natural Draft ☐Induced ☐Forced ☐Other – Specify: ***TBD***

SECTION G – STACK DATA

Inside Diameter (ft) ***3***	Height Above Grade (ft) ***100***
Gas Temperature at Exit (Avg. °F) ***294.2***	Gas Velocity at Exit (Avg. ft/sec) ***93.9***
Are Emission Control Devices in Place? If YES – Complete SFN 8532 ☒ Yes ☐No	
Stack Exit Gas Flow Rate	
Average (ACFM) ***19,914.80***	Average (DSCFM) ***TBD***
Maximum (ACFM) ***TBD***	Maximum (DSCFM) ***TBD***
Are sampling ports available? ☐No ☒ Yes – Describe:	

SECTION H – NEARBY BUILDINGS

Attach drawings which show the plan and elevation views of any nearby buildings including the building that houses the fuel-fired equipment.
Plant layout drawings attached to this permit application.

SECTION I – AIR CONTAMINANTS EMITTED

Pollutant	Maximum Pounds Per Hour	Tons Per Year
PM_{10} Total	***2,40E-01***	***1,05E+00***
PM_{10} Filterable	***6,00E-02***	***2,63E-01***
$PM_{2.5}$ Total	***2,40E-01***	***1,05E+00***
$PM_{2.5}$ Filterable	***6,00E-02***	***2,63E-01***
$PM_{2.5}$ Condensable	***1,80E-01***	***7,88E-01***
Sulfur Dioxide	***3,53E-02***	***1,55E-01***
Nitrogen Oxides	***1,80E+00***	***7,88E+00***
Carbon Monoxide	***1,68E+00***	***7,36E+00***
Greenhouse Gases (CO2e)	***N/A***	
Other – Specify		
Lead	***2,94E-05***	***1,29E-04***
Metal HAP (Total)	***4,39E-04***	***1,92E-03***
Organic HAPs (Total)	***2,93E-02***	***1,28E-01***
VOC	***3,24E-01***	***1,42E+00***

Basis and Calculations for Quantities:
Engineering data and Emission factors from Table 1.4-2. AP 42, Chapter 1: External Combustion Sources. See Document P-5715043-01-001-18042-I001 "EMISSIONS INVENTORY" and P-5715043-01-001-18035-I001 "BACT Analysis"

Signature of Applicant	Date
	09/26/2016

SEND COMPLETED APPLICATION AND ALL ATTACHMENTS TO:

North Dakota Department of Health
Division of Air Quality
918 E Divide Ave., 2nd Floor
Bismarck, ND 58501-1947
(701) 328-5188

PERMIT APPLICATION FOR
FUEL BURNING EQUIPMENT FOR INDIRECT HEATING

NORTH DAKOTA DEPARTMENT OF HEALTH
DIVISION OF AIR QUALITY
SFN 8518 (09-12)

SECTION A – FACILITY INFORMATION

Name of Firm or Organization ***Meridian Energy Group – Davis Refinery***		
Contact Person for Air Pollution Matters ***Tom Johnson***		
Title ***Vice President of Operations***	Telephone Number ***(409)795-0792***	E-mail Address ***tjohnson@meridianenergygroup.inc***
Applicant´s Name ***Tom Williams***		
Title ***VP of Planning & Permitting***	Telephone Number ***(707) 299-0182***	E-mail Address ***twilliams@meridianenergygroup.inc***
Mailing Address (Street & No.) ***2062 Business Center Drive, Suite 115***		
City ***Irvine***	State ***CA***	ZIP Code ***92612***
Facility Address (Street & No.) ***37th Street***		
City ***Belfield***	State ***ND***	ZIP Code ***58622***

County ***Billings***	Latitude (Nearest Second) ***46°52'45"N***	Longitude (Nearest Second) ***103°14'55" W***

Legal Description of Facility Site ***Property ID 07 0000 00165 000 in the SE 1/4 of Section 2, Twp 139N, Range 100W and Property ID: 07 0000 00162 000 in the NW1/4 and SW 1/4 of Section 1, Twp 139N, Range 100W***	Land Area at Facility Site ***261 Acres***	MSL Elevation at Facility ***2,685 feet***

SECTION B – EQUIPMENT

Source ID No. (From form SFN 8516) ***202-PK-0201C***	Name of Manufacturer ***TBD***
Rated Capacity/Maximum Input ***TBD***	Model Number ***TBD***
Purpose Space Heat _____% Process Heat ***100*** %	Power Generation _____% Other (Specify % if Multi Purpose) _____%

SECTION C – TYPE OF COMBUSTION UNIT AND FUEL FEEDING METHOD

Coal (If other solid fuel, specify here) ☐Pulverized ☐General ☐Dry Bottom ☐Wet Bottom with Fly Ash Reinjection ☐Wet Bottom without Fly Ash Reinjection ☐Other – Specify:	☐Spreader Stoker with Fly Ash Reinjection ☐Spreader Stoker without Fly Ash Reinjection ☐Fluidized Bed ☐Cyclone ☐Hand-Fired
Fuel Oil ☐Horizontally Fired ☐Tangentially Fired ☐Other – Specify:	Gas ☐Horizontally Fired ☐Tangentially Fired ☐Other – Specify: ***TBD***

SECTION D – NORMAL SCHEDULE OF OPERATION

Hours Per Day	Days Per Week	Weeks Per Year	Hours Per Year Total	Peak Season (Specify Months)
24	***7***	***52***	***8760***	***N/A***

SECTION E – FUEL USE EXPECTED IN A CALENDAR YEAR

Year ***2017-2018***					
Primary Fuels			Standby Fuels		
Type ***Fuel Gas***			Type ***None***		
Quantity Per Year ***20,144,496***	Units of Measure ***lb/yr***		Quantity Per Year	Units of Measure	
Percent Ash (Solid Fuels Only)					
Minimum	Maximum	Average	Minimum	Maximum	Average
Percent Sulfur					
Minimum ***0***	Maximum ***0***	Average ***0***	Minimum	Maximum	Average
Btu Per Unit of Measure (e.g. lb, gal, etc. - Specify)					
Minimum ***TBD***	Maximum ***TBD***	Average ***26,091.49***	Minimum	Maximum	Average
Describe Fuel Transport and Storage Methods: ***N/A, fuel gas to be generated within the refinery***					

SECTION F – COMBUSTION AIR

☐Natural Draft ☐Induced ☐Forced ☐Other – Specify: ***TBD***

SECTION G – STACK DATA

Inside Diameter (ft) ***3***	Height Above Grade (ft) ***100***
Gas Temperature at Exit (Avg. °F) ***294.2***	Gas Velocity at Exit (Avg. ft/sec) ***93.9***
Are Emission Control Devices in Place? If YES – Complete SFN 8532 ☒ Yes ☐No	
Stack Exit Gas Flow Rate	
Average (ACFM) ***19,914.80***	Average (DSCFM) ***TBD***
Maximum (ACFM) ***TBD***	Maximum (DSCFM) ***TBD***
Are sampling ports available? ☐No ☒ Yes – Describe:	

SECTION H – NEARBY BUILDINGS

Attach drawings which show the plan and elevation views of any nearby buildings including the building that houses the fuel-fired equipment.
Plant layout drawings attached to this permit application.

SECTION I – AIR CONTAMINANTS EMITTED

Pollutant	Maximum Pounds Per Hour	Tons Per Year
PM_{10} Total	***2,40E-01***	***1,05E+00***
PM_{10} Filterable	***6,00E-02***	***2,63E-01***
$PM_{2.5}$ Total	***2,40E-01***	***1,05E+00***
$PM_{2.5}$ Filterable	***6,00E-02***	***2,63E-01***
$PM_{2.5}$ Condensable	***1,80E-01***	***7,88E-01***
Sulfur Dioxide	***3,53E-02***	***1,55E-01***
Nitrogen Oxides	***1,80E+00***	***7,88E+00***
Carbon Monoxide	***1,68E+00***	***7,36E+00***
Greenhouse Gases (CO2e)	***N/A***	
Other – Specify		
Lead	***2,94E-05***	***1,29E-04***
Metal HAP (Total)	***4,39E-04***	***1,92E-03***
Organic HAPs (Total)	***2,93E-02***	***1,28E-01***
VOC	***3,24E-01***	***1,42E+00***

Basis and Calculations for Quantities:
Engineering data and Emission factors from Table 1.4-2. AP 42, Chapter 1: External Combustion Sources. See Document P-5715043-01-001-18042-I001 "EMISSIONS INVENTORY" and P-5715043-01-001-18035-I001 "BACT Analysis"

Signature of Applicant	Date
Jon Wilkens	09/26/2016

SEND COMPLETED APPLICATION AND ALL ATTACHMENTS TO:

North Dakota Department of Health
Division of Air Quality
918 E Divide Ave., 2nd Floor
Bismarck, ND 58501-1947
(701) 328-5188

PERMIT APPLICATION FOR
HAZARDOUS AIR POLLUTANT (HAP) SOURCES

NORTH DAKOTA DEPARTMENT OF HEALTH
DIVISION OF AIR QUALITY
SFN 8329 (09-12)

SECTION A1 - APPLICANT INFORMATION

Name of Firm or Organization ***Meridian Energy Group - Davis Refinery***		
Applicant's Name ***Tom Williams***		
Title ***VP of Planning &Permitting***	Telephone Number ***(707) 299-0182***	E-mail Address ***twilliams@meridianenergygroup.inc***
Mailing Address (Street & No.) ***2062 Business Center Drive, Suite 115***		
City ***Irvine***	State ***CA***	ZIP Code ***92612***

SECTION A2 - FACILITY INFORMATION

Contact Person for Air Pollution Matters ***Tom Johnson***		
Title ***Vice President of Operations***	Telephone Number ***(409)795-0792***	E-mail Address ***tjohnson@meridianenergygroup.inc***
Facility Address (Street & No. or Lat/Long to Nearest Second) ***37th Street / 46°52'45"N/103°14'55" W***		
City ***Belfield***	State ***ND***	ZIP Code ***58622***
County ***Billings***	Number of Employees at Location ***TBD***	
Land Area at Plant Site ***261*** Acres (or) Sq. Ft.	MSL Elevation at Plant ***2,685 feet***	

Describe Nature of Business/Process ***Petroleum Refining / Atmospheric Distillation Unit 1 / Crude Oil Heater***

SECTION B – STACK DATA

Inside Diameter (ft) ***6.3***	Height Above Grade (ft) ***127.6***	
Gas Temperature at Exit (°F) ***787.7***	Gas Velocity at Exit (ft/sec) ***20.1***	Gas Volume (scfm) ***37,427.14***
Basis of any Estimates (attach separate sheet if necessary) ***Engineering data and Emission factors from Table 1.4-2. AP 42, Chapter 1: External Combustion Sources. See Document P-5715043-01-001-18042-I001 "EMISSIONS INVENTORY" and P-5715043-01-001-18035-I001 "BACT Analysis"***		
Are Emission Control Devices in Place? If YES – Complete SFN 8532		Yes ☒ No ☐
Nearest Residences or Building ***Utility building***	Distance (ft) ***330.1 ft***	Direction ***South***
Nearest Property Line ***Fenceline***	Distance (ft) ***589 ft***	Direction ***Southeast***

SECTION C – EMISSION STREAM DATA

Source ID No. From SFN 8516 ***101-H-0101***	Mean Particle Diameter (μm) ***TBD***
Flow Rate (scfm) ***37,427.14***	Drift Velocity (ft/sec) ***20.1***
Stream Temperature (°F) ***787.7***	Particulate Concentration (gr/dscf) ***TBD***
Moisture Content (%) ***TBD***	Halogens or Metals Present? ***Metals***
Pressure (in. Hg) ***TBD***	Organic Content (ppmv) $1.79x10^{-1}$
Heat Content (Btu/scfm) ***TBD***	O_2 Content (%) ***N/A***

SECTION D – POLLUTANT SPECIFIC DATA
(Complete One Box for Each Pollutant in Emission Stream)

Pollutant Emitted ***Acetaldehyde***	Chemical Abstract Services (CAS) Number ***75-07-0***
Proposed Emission Rate (lb/hr) $2.16x10^{-4}$	Emission Source (describe) ***Process Point***
Source Classification (process point, process fugitive, area fugitive) ***Process Point***	Pollutant Class and Form (organic/inorganic - particulate/vapor) ***Organic Vapor***
Concentration in Emission Stream (ppmv) $1.99x10^{-3}$	Vapor Pressure (in. Hg @ °F) ***35.51 in Hg @ 68°C***
Solubility $1x10^{+6}$ ***mg/L in water @ 77°F***	Molecular Weight (lb/lb-mole) ***44.05***
Absorptive Properties -	

Pollutant Emitted ***Benzene***	Chemical Abstract Services (CAS) Number ***71-43-2***
Proposed Emission Rate (lb/hr) $3.78x10^{-5}$	Emission Source (describe) ***Process Point***
Source Classification (process point, process fugitive, area fugitive) ***Process Point***	Pollutant Class and Form (organic/inorganic - particulate/vapor) ***Organic /Vapor***
Concentration in Emission Stream (ppmv) $1.96x10^{-4}$	Vapor Pressure (in. Hg @ °F) ***3.73 in Hg @ 77 °F***
Solubility ***In water*** $1.79x10^{3}$ ***mg/L @ 77 °F***	Molecular Weight (lb/lb-mole) ***78.11***
Absorptive Properties -	

Pollutant Emitted ***Dichlorobenzene***	Chemical Abstract Services (CAS) Number ***Varies***
Proposed Emission Rate (lb/hr) $2.16x10^{-5}$	Emission Source (describe) ***Process Point***
Source Classification (process point, process fugitive, area fugitive) ***Process Point***	Pollutant Class and Form (organic/inorganic - particulate/vapor) ***Organic /Vapor***
Concentration in Emission Stream (ppmv) $5.97x10^{-5}$	Vapor Pressure (in. Hg @ °F) ***Varies***
Solubility ***Varies***	Molecular Weight (lb/lb-mole) ***147.00***
Absorptive Properties -	

Pollutant Emitted ***Ethylbenzene***	Chemical Abstract Services (CAS) Number ***100-41-4***
Proposed Emission Rate (lb/hr) ***$2.88x10^{-4}$***	Emission Source (describe) ***Process Point***
Source Classification (process point, process fugitive, area fugitive) ***Process Point***	Pollutant Class and Form (organic/inorganic - particulate/vapor) ***Organic /Vapor***
Concentration in Emission Stream (ppmv) ***$1.10x10^{-3}$***	Vapor Pressure (in. Hg @ °F) ***0.37 in Hg @ 77°F***
Solubility ***In water 0.014 g/100mL @ 59 °F***	Molecular Weight (lb/lb-mole) ***106.17***
Absorptive Properties -	

Pollutant Emitted ***Formaldehyde***	Chemical Abstract Services (CAS) Number ***50-00-0***
Proposed Emission Rate (lb/hr) ***$1.33x10^{-3}$***	Emission Source (describe) ***Process Point***
Source Classification (process point, process fugitive, area fugitive) ***Process Point***	Pollutant Class and Form (organic/inorganic - particulate/vapor) ***Organic /Vapor***
Concentration in Emission Stream (ppmv) ***$1.80x10^{-2}$***	Vapor Pressure (in. Hg @ °F) ***0.15 in Hg @ 77 °F***
Solubility ***In water 4.00 $x10^{5}$ mg/L @ 68°F***	Molecular Weight (lb/lb-mole) ***30.03***
Absorptive Properties -	

Pollutant Emitted ***Hexane***	Chemical Abstract Services (CAS) Number ***110-54-5***
Proposed Emission Rate (lb/hr) ***$3.24x10^{-2}$***	Emission Source (describe) ***Process Point***
Source Classification (process point, process fugitive, area fugitive) ***Process Point***	Pollutant Class and Form (organic/inorganic - particulate/vapor) ***Organic /Vapor***
Concentration in Emission Stream (ppmv) ***$1.53x10^{-1}$***	Vapor Pressure (in. Hg @ °F) ***5.90 in Hg @ 68 °F***
Solubility ***Insoluble in water***	Molecular Weight (lb/lb-mole) ***86.1***
Absorptive Properties -	

Pollutant Emitted ***Naphthalene***	Chemical Abstract Services (CAS) Number ***91-20-3***
Proposed Emission Rate (lb/hr) ***$1.08x10^{-5}$***	Emission Source (describe) ***Process Point***
Source Classification (process point, process fugitive, area fugitive) ***Process Point***	Pollutant Class and Form (organic/inorganic - particulate/vapor) ***Organic /Vapor***
Concentration in Emission Stream (ppmv) ***$3.42x10^{-5}$***	Vapor Pressure (in. Hg @ °F) ***0.003 in Hg @ 77 °F***
Solubility ***In water 31 mg/L @ 77 °F***	Molecular Weight (lb/lb-mole) ***128.17***
Absorptive Properties -	

Pollutant Emitted ***Toluene***	Chemical Abstract Services (CAS) Number ***108-88-3***
Proposed Emission Rate (lb/hr) ***$5.94x10^{-5}$***	Emission Source (describe) ***Process Point***
Source Classification (process point, process fugitive, area fugitive) ***Process Point***	Pollutant Class and Form (organic/inorganic - particulate/vapor) ***Organic /Vapor***
Concentration in Emission Stream (ppmv) ***$2.62x10^{-4}$***	Vapor Pressure (in. Hg @ °F) ***1.12 in Hg @ 77°F***
Solubility ***In water 526 mg/L @ 77°F***	Molecular Weight (lb/lb-mole) ***92.14***
Absorptive Properties -	

Pollutant Emitted ***Xylene***	Chemical Abstract Services (CAS) Number ***95-47-6***
Proposed Emission Rate (lb/hr) ***$4.50x10^{-4}$***	Emission Source (describe) ***Process Point***
Source Classification (process point, process fugitive, area fugitive) ***Process Point***	Pollutant Class and Form (organic/inorganic - particulate/vapor) ***Organic /Vapor***
Concentration in Emission Stream (ppmv) ***$1.72x10^{-3}$***	Vapor Pressure (in. Hg @ °F) ***0.26 in Hg @ 77°F***
Solubility ***In water 178 mg/L @ 77°F***	Molecular Weight (lb/lb-mole) ***106.16***
Absorptive Properties -	

Pollutant Emitted ***PAH***	Chemical Abstract Services (CAS) Number ***N/A***
Proposed Emission Rate (lb/hr) ***$7.67x10^{-5}$***	Emission Source (describe) ***Process Point***
Source Classification (process point, process fugitive, area fugitive) ***Process Point***	Pollutant Class and Form (organic/inorganic - particulate/vapor) ***Organic /Vapor***
Concentration in Emission Stream (ppmv) ***$3.19x10^{-4}$***	Vapor Pressure (in. Hg @ °F) ***N/A***
Solubility ***N/A***	Molecular Weight (lb/lb-mole) ***TBD***
Absorptive Properties -	

Pollutant Emitted ***Antimony***	Chemical Abstract Services (CAS) Number ***7740-36-0***
Proposed Emission Rate (lb/hr) ***$3.74x10^{-5}$***	Emission Source (describe) ***Process Point***
Source Classification (process point, process fugitive, area fugitive) ***Process Point***	Pollutant Class and Form (organic/inorganic - particulate/vapor) ***Inorganic/particulate***
Concentration in Emission Stream (ppmv) ***$1.25x10^{-4}$***	Vapor Pressure (in. Hg @ °F) ***0 in Hg @ 77°F***
Solubility ***Insoluble in water***	Molecular Weight (lb/lb-mole) ***121.76***
Absorptive Properties -	

Pollutant Emitted ***Arsenic***	Chemical Abstract Services (CAS) Number ***7440-38-2***
Proposed Emission Rate (lb/hr) ***$1.44x10^{-5}$***	Emission Source (describe) ***Process Point***
Source Classification (process point, process fugitive, area fugitive) ***Process Point***	Pollutant Class and Form (organic/inorganic - particulate/vapor) ***Inorganic/Particulate***
Concentration in Emission Stream (ppmv) ***$7.80x10^{-5}$***	Vapor Pressure (in. Hg @ °F) ***0 in Hg @ 77°F***
Solubility ***Insoluble in water***	Molecular Weight (lb/lb-mole)
Absorptive Properties -	

Pollutant Emitted ***Beryllium***	Chemical Abstract Services (CAS) Number ***7440-41-7***
Proposed Emission Rate (lb/hr) ***$9.36x10^{-6}$***	Emission Source (describe) ***Process Point***
Source Classification (process point, process fugitive, area fugitive) ***Process Point***	Pollutant Class and Form (organic/inorganic - particulate/vapor) ***Inorganic/Particulate***
Concentration in Emission Stream (ppmv) ***$4.22x10^{-4}$***	Vapor Pressure (in. Hg @ °F) ***0 in Hg @ 77°F***
Solubility ***Insoluble in water***	Molecular Weight (lb/lb-mole) ***9.01***
Absorptive Properties -	

Pollutant Emitted ***Cadmium***	Chemical Abstract Services (CAS) Number ***7440-43-9***
Proposed Emission Rate (lb/hr) ***$7.92x10^{-5}$***	Emission Source (describe) ***Process Point***
Source Classification (process point, process fugitive, area fugitive) ***Process Point***	Pollutant Class and Form (organic/inorganic - particulate/vapor) ***Inorganic/Particulate***
Concentration in Emission Stream (ppmv) ***$2.86x10^{-4}$***	Vapor Pressure (in. Hg @ °F) ***0 in Hg@ 77°F***
Solubility ***Insoluble in water***	Molecular Weight (lb/lb-mole)
Absorptive Properties -	

Pollutant Emitted ***Chromium (hexavalent)***	Chemical Abstract Services (CAS) Number ***1333-82-0***
Proposed Emission Rate (lb/hr) ***$2.02x10^{-5}$***	Emission Source (describe) ***Process Point***
Source Classification (process point, process fugitive, area fugitive) ***Process Point***	Pollutant Class and Form (organic/inorganic - particulate/vapor) ***Inorganic/Particulate***
Concentration in Emission Stream (ppmv) ***$1.57x10^{-4}$***	Vapor Pressure (in. Hg @ °F) ***0 in Hg @77°F***
Solubility ***1,660 g/L in water @ 77°F***	Molecular Weight (lb/lb-mole) ***51.99***
Absorptive Properties -	

Pollutant Emitted ***Chromium***	Chemical Abstract Services (CAS) Number ***7440-47-3***
Proposed Emission Rate (lb/hr) ***$1.01x10^{-4}$***	Emission Source (describe) ***Process Point***
Source Classification (process point, process fugitive, area fugitive) ***Process Point***	Pollutant Class and Form (organic/inorganic - particulate/vapor) ***Inorganic/Particulate***
Concentration in Emission Stream (ppmv) ***$7.87x10^{-4}$***	Vapor Pressure (in. Hg @ °F) ***0 in Hg @ 77°F***
Solubility ***Insoluble in water***	Molecular Weight (lb/lb-mole) ***51.99***
Absorptive Properties -	

Pollutant Emitted ***Cobalt***	Chemical Abstract Services (CAS) Number ***7440-48-4***
Proposed Emission Rate (lb/hr) ***$5.90x10^{-6}$***	Emission Source (describe) ***Process Point***
Source Classification (process point, process fugitive, area fugitive) ***Process Point***	Pollutant Class and Form (organic/inorganic - particulate/vapor) ***Inorganic/Particulate***
Concentration in Emission Stream (ppmv) ***$4.07x10^{-5}$***	Vapor Pressure (in. Hg @ °F) ***0 in Hg @ 77°F***
Solubility ***Insoluble in water***	Molecular Weight (lb/lb-mole) ***58.93***
Absorptive Properties -	

Pollutant Emitted ***Manganese***	Chemical Abstract Services (CAS) Number
Proposed Emission Rate (lb/hr) ***$2.66x10^{-5}$***	Emission Source (describe) ***Process Point***
Source Classification (process point, process fugitive, area fugitive) ***Process Point***	Pollutant Class and Form (organic/inorganic - particulate/vapor) ***Inorganic/Particulate***
Concentration in Emission Stream (ppmv) ***$1.97x10^{-4}$***	Vapor Pressure (in. Hg @ °F) ***0 in Hg @ 77 °F***
Solubility ***Insoluble in water***	Molecular Weight (lb/lb-mole) ***54.94***
Absorptive Properties -	

Pollutant Emitted ***Mercury***	Chemical Abstract Services (CAS) Number ***7439-97-6***
Proposed Emission Rate (lb/hr) ***$1.80x10^{-5}$***	Emission Source (describe) ***Process Point***
Source Classification (process point, process fugitive, area fugitive) ***Process Point***	Pollutant Class and Form (organic/inorganic - particulate/vapor) ***Inorganic/Particulate***
Concentration in Emission Stream (ppmv) ***$3.64x10^{-5}$***	Vapor Pressure (in. Hg @ °F) ***$7.85x10^{-5}$ in Hg @ 77 °F***
Solubility ***Insoluble in water***	Molecular Weight (lb/lb-mole) ***200.59***
Absorptive Properties -	

Pollutant Emitted ***Nickel***	Chemical Abstract Services (CAS) Number ***7044-02-0***
Proposed Emission Rate (lb/hr) ***$1.51x10^{-4}$***	Emission Source (describe) ***Process Point***
Source Classification (process point, process fugitive, area fugitive) ***Process Point***	Pollutant Class and Form (organic/inorganic - particulate/vapor) ***Inorganic/Particulate***
Concentration in Emission Stream (ppmv) ***$1.05x10^{-3}$***	Vapor Pressure (in. Hg @ °F) ***0 in Hg Q 77°F***
Solubility ***Insoluble in water***	Molecular Weight (lb/lb-mole) ***58.69***
Absorptive Properties -	

Pollutant Emitted ***Selenium***	Chemical Abstract Services (CAS) Number ***7782-49-2***
Proposed Emission Rate (lb/hr) ***$6.34x10^{-5}$***	Emission Source (describe) ***Process Point***
Source Classification (process point, process fugitive, area fugitive) ***Process Point***	Pollutant Class and Form (organic/inorganic - particulate/vapor) ***Inorganic/Particulate***
Concentration in Emission Stream (ppmv) ***$3.26x10^{-4}$***	Vapor Pressure (in. Hg @ °F) ***0.29 in Hg @ 807***
Solubility ***Insoluble in water***	Molecular Weight (lb/lb-mole) ***78.96***
Absorptive Properties -	

Signature of Applicant	Date 9/26/2016

SEND COMPLETED APPLICATION AND ALL ATTACHMENTS TO:

North Dakota Department of
Health Division of Air Quality
918 E Divide Ave., 2nd Floor
Bismarck, ND 58501-1947
(701) 328-5188

PERMIT APPLICATION FOR
HAZARDOUS AIR POLLUTANT (HAP) SOURCES

NORTH DAKOTA DEPARTMENT OF HEALTH
DIVISION OF AIR QUALITY
SFN 8329 (09-12)

SECTION A1 - APPLICANT INFORMATION

Name of Firm or Organization ***Meridian Energy Group - Davis Refinery***		
Applicant's Name ***Tom Williams***		
Title ***VP of Planning &Permitting***	Telephone Number ***(707) 299-0182***	E-mail Address ***twilliams@meridianenergygroup.inc***
Mailing Address (Street & No.) ***2062 Business Center Drive, Suite 115***		
City ***Irvine***	State ***CA***	ZIP Code ***92612***

SECTION A2 - FACILITY INFORMATION

Contact Person for Air Pollution Matters ***Tom Johnson***		
Title ***Vice President of Operations***	Telephone Number ***(409)795-0792***	E-mail Address ***tjohnson@meridianenergygroup.inc***
Facility Address (Street & No. or Lat/Long to Nearest Second) ***37th Street / 46°52'45"N/103°14'55" W***		
City ***Belfield***	State ***ND***	ZIP Code ***58622***
County ***Billings***	Number of Employees at Location ***TBD***	
Land Area at Plant Site ***261*** Acres (or) Sq. Ft.	MSL Elevation at Plant ***2,685 feet***	

Describe Nature of Business/Process

Petroleum Refining / Atmospheric Distillation Unit 2 / Crude Oil Heater

SECTION B – STACK DATA

Inside Diameter (ft) ***6.3***	Height Above Grade (ft) ***127.6***	
Gas Temperature at Exit (°F) ***787.7***	Gas Velocity at Exit (ft/sec) ***20.1***	Gas Volume (scfm) ***37,427.14***
Basis of any Estimates (attach separate sheet if necessary) ***Engineering data and Emission factors from Table 1.4-2. AP 42, Chapter 1: External Combustion Sources. See Document P-5715043-01-001-18042-I001 "EMISSIONS INVENTORY" and P-5715043-01-001-18035-I001 "BACT Analysis"***		
Are Emission Control Devices in Place? If YES – Complete SFN 8532		Yes ☒ No ☐
Nearest Residences or Building ***Utility building***	Distance (ft) ***402 ft***	Direction ***South***
Nearest Property Line ***Fenceline***	Distance (ft) ***500 ft***	Direction ***Southeast***

SECTION C – EMISSION STREAM DATA

Source ID No. From SFN 8516 ***102-H-0201***	Mean Particle Diameter (μm) ***TBD***
Flow Rate (scfm) ***37,427.14***	Drift Velocity (ft/sec) ***20.1***
Stream Temperature (°F) ***787.7***	Particulate Concentration (gr/dscf) ***TBD***
Moisture Content (%) ***TBD***	Halogens or Metals Present? ***Metals***
Pressure (in. Hg) ***TBD***	Organic Content (ppmv) $1.79x10^{-1}$
Heat Content (Btu/scfm) ***TBD***	O_2 Content (%) ***N/A***

SECTION D – POLLUTANT SPECIFIC DATA
(Complete One Box for Each Pollutant in Emission Stream)

Pollutant Emitted ***Acetaldehyde***	Chemical Abstract Services (CAS) Number ***75-07-0***
Proposed Emission Rate (lb/hr) $2.16x10^{-4}$	Emission Source (describe) ***Process Point***
Source Classification (process point, process fugitive, area fugitive) ***Process Point***	Pollutant Class and Form (organic/inorganic - particulate/vapor) ***Organic Vapor***
Concentration in Emission Stream (ppmv) $1.99x10^{-3}$	Vapor Pressure (in. Hg @ °F) ***35.51 in Hg @ 68°C***
Solubility $1x10^{+6}$ ***mg/L in water @ 77°F***	Molecular Weight (lb/lb-mole) ***44.05***
Absorptive Properties -	

Pollutant Emitted ***Benzene***	Chemical Abstract Services (CAS) Number ***71-43-2***
Proposed Emission Rate (lb/hr) $3.78x10^{-5}$	Emission Source (describe) ***Process Point***
Source Classification (process point, process fugitive, area fugitive) ***Process Point***	Pollutant Class and Form (organic/inorganic - particulate/vapor) ***Organic /Vapor***
Concentration in Emission Stream (ppmv) $1.96x10^{-4}$	Vapor Pressure (in. Hg @ °F) ***3.73 in Hg @ 77 °F***
Solubility ***In water*** $1.79x10^{3}$ ***mg/L @ 77 °F***	Molecular Weight (lb/lb-mole) ***78.11***
Absorptive Properties -	

Pollutant Emitted ***Dichlorobenzene***	Chemical Abstract Services (CAS) Number ***Varies***
Proposed Emission Rate (lb/hr) $2.16x10^{-5}$	Emission Source (describe) ***Process Point***
Source Classification (process point, process fugitive, area fugitive) ***Process Point***	Pollutant Class and Form (organic/inorganic - particulate/vapor) ***Organic /Vapor***
Concentration in Emission Stream (ppmv) $5.97x10^{-5}$	Vapor Pressure (in. Hg @ °F) ***Varies***
Solubility ***Varies***	Molecular Weight (lb/lb-mole) ***147.00***
Absorptive Properties -	

Pollutant Emitted ***Ethylbenzene***	Chemical Abstract Services (CAS) Number ***100-41-4***
Proposed Emission Rate (lb/hr) ***$2.88x10^{-4}$***	Emission Source (describe) ***Process Point***
Source Classification (process point, process fugitive, area fugitive) ***Process Point***	Pollutant Class and Form (organic/inorganic - particulate/vapor) ***Organic /Vapor***
Concentration in Emission Stream (ppmv) ***$1.10x10^{-3}$***	Vapor Pressure (in. Hg @ °F) ***0.37 in Hg @ 77°F***
Solubility ***In water 0.014 g/100mL @ 59 °F***	Molecular Weight (lb/lb-mole) ***106.17***
Absorptive Properties -	

Pollutant Emitted ***Formaldehyde***	Chemical Abstract Services (CAS) Number ***50-00-0***
Proposed Emission Rate (lb/hr) ***$1.33x10^{-3}$***	Emission Source (describe) ***Process Point***
Source Classification (process point, process fugitive, area fugitive) ***Process Point***	Pollutant Class and Form (organic/inorganic - particulate/vapor) ***Organic /Vapor***
Concentration in Emission Stream (ppmv) ***$1.8x10^{-2}$***	Vapor Pressure (in. Hg @ °F) ***0.15 in Hg @ 77 °F***
Solubility ***In water 4.00 $x10^{5}$ mg/L @ 68°F***	Molecular Weight (lb/lb-mole) ***30.03***
Absorptive Properties -	

Pollutant Emitted ***Hexane***	Chemical Abstract Services (CAS) Number ***110-54-5***
Proposed Emission Rate (lb/hr) ***$3.24x10^{-2}$***	Emission Source (describe) ***Process Point***
Source Classification (process point, process fugitive, area fugitive) ***Process Point***	Pollutant Class and Form (organic/inorganic - particulate/vapor) ***Organic /Vapor***
Concentration in Emission Stream (ppmv) ***$1.53x10^{-1}$***	Vapor Pressure (in. Hg @ °F) ***5.90 in Hg @ 68 °F***
Solubility ***Insoluble in water***	Molecular Weight (lb/lb-mole) ***86.1***
Absorptive Properties -	

Pollutant Emitted ***Naphthalene***	Chemical Abstract Services (CAS) Number ***91-20-3***
Proposed Emission Rate (lb/hr) ***$1.08x10^{-5}$***	Emission Source (describe) ***Process Point***
Source Classification (process point, process fugitive, area fugitive) ***Process Point***	Pollutant Class and Form (organic/inorganic - particulate/vapor) ***Organic /Vapor***
Concentration in Emission Stream (ppmv) ***$3.42x10^{-5}$***	Vapor Pressure (in. Hg @ °F) ***0.003 in Hg @ 77 °F***
Solubility ***In water 31 mg/L @ 77 °F***	Molecular Weight (lb/lb-mole) ***128.17***
Absorptive Properties -	

Pollutant Emitted ***Toluene***	Chemical Abstract Services (CAS) Number ***108-88-3***
Proposed Emission Rate (lb/hr) ***$5.94x10^{-5}$***	Emission Source (describe) ***Process Point***
Source Classification (process point, process fugitive, area fugitive) ***Process Point***	Pollutant Class and Form (organic/inorganic - particulate/vapor) ***Organic /Vapor***
Concentration in Emission Stream (ppmv) ***$2.62x10^{-4}$***	Vapor Pressure (in. Hg @ °F) ***1.12 in Hg @ 77°F***
Solubility ***In water 526 mg/L @ 77°F***	Molecular Weight (lb/lb-mole) ***92.14***
Absorptive Properties -	

Pollutant Emitted ***Xylene***	Chemical Abstract Services (CAS) Number ***95-47-6***
Proposed Emission Rate (lb/hr) ***$4.50x10^{-4}$***	Emission Source (describe) ***Process Point***
Source Classification (process point, process fugitive, area fugitive) ***Process Point***	Pollutant Class and Form (organic/inorganic - particulate/vapor) ***Organic /Vapor***
Concentration in Emission Stream (ppmv) ***$1.72x10^{-3}$***	Vapor Pressure (in. Hg @ °F) ***0.26 in Hg @ 77°F***
Solubility ***In water 178 mg/L @ 77°F***	Molecular Weight (lb/lb-mole) ***106.16***
Absorptive Properties -	

Pollutant Emitted ***PAH***	Chemical Abstract Services (CAS) Number ***N/A***
Proposed Emission Rate (lb/hr) ***$7.67x10^{-5}$***	Emission Source (describe) ***Process Point***
Source Classification (process point, process fugitive, area fugitive) ***Process Point***	Pollutant Class and Form (organic/inorganic - particulate/vapor) ***Organic /Vapor***
Concentration in Emission Stream (ppmv) ***$3.19x10^{-4}$***	Vapor Pressure (in. Hg @ °F) ***N/A***
Solubility ***N/A***	Molecular Weight (lb/lb-mole) ***TBD***
Absorptive Properties -	

Pollutant Emitted ***Antimony***	Chemical Abstract Services (CAS) Number ***7740-36-0***
Proposed Emission Rate (lb/hr) ***$3.74x10^{-5}$***	Emission Source (describe) ***Process Point***
Source Classification (process point, process fugitive, area fugitive) ***Process Point***	Pollutant Class and Form (organic/inorganic - particulate/vapor) ***Inorganic/particulate***
Concentration in Emission Stream (ppmv) ***$1.25x10^{-4}$***	Vapor Pressure (in. Hg @ °F) ***0 in Hg @ 77°F***
Solubility ***Insoluble in water***	Molecular Weight (lb/lb-mole) ***121.76***
Absorptive Properties -	

Pollutant Emitted ***Arsenic***	Chemical Abstract Services (CAS) Number ***7440-38-2***
Proposed Emission Rate (lb/hr) ***$1.44x10^{-5}$***	Emission Source (describe) ***Process Point***
Source Classification (process point, process fugitive, area fugitive) ***Process Point***	Pollutant Class and Form (organic/inorganic - particulate/vapor) ***Inorganic/Particulate***
Concentration in Emission Stream (ppmv) ***$7.80x10^{-5}$***	Vapor Pressure (in. Hg @ °F) ***0 in Hg @ 77°F***
Solubility ***Insoluble in water***	Molecular Weight (lb/lb-mole)
Absorptive Properties -	

Pollutant Emitted ***Beryllium***	Chemical Abstract Services (CAS) Number ***7440-41-7***
Proposed Emission Rate (lb/hr) ***$9.36x10^{-6}$***	Emission Source (describe) ***Process Point***
Source Classification (process point, process fugitive, area fugitive) ***Process Point***	Pollutant Class and Form (organic/inorganic - particulate/vapor) ***Inorganic/Particulate***
Concentration in Emission Stream (ppmv) ***$4.22x10^{-4}$***	Vapor Pressure (in. Hg @ °F) ***0 in Hg @ 77°F***
Solubility ***Insoluble in water***	Molecular Weight (lb/lb-mole) ***9.01***
Absorptive Properties -	

Pollutant Emitted ***Cadmium***	Chemical Abstract Services (CAS) Number ***7440-43-9***
Proposed Emission Rate (lb/hr) ***$7.92x10^{-5}$***	Emission Source (describe) ***Process Point***
Source Classification (process point, process fugitive, area fugitive) ***Process Point***	Pollutant Class and Form (organic/inorganic - particulate/vapor) ***Inorganic/Particulate***
Concentration in Emission Stream (ppmv) ***$2.86x10^{-4}$***	Vapor Pressure (in. Hg @ °F) ***0 in Hg@ 77°F***
Solubility ***Insoluble in water***	Molecular Weight (lb/lb-mole)
Absorptive Properties -	

Pollutant Emitted ***Chromium (hexavalent)***	Chemical Abstract Services (CAS) Number ***1333-82-0***
Proposed Emission Rate (lb/hr) ***$2.02x10^{-5}$***	Emission Source (describe) ***Process Point***
Source Classification (process point, process fugitive, area fugitive) ***Process Point***	Pollutant Class and Form (organic/inorganic - particulate/vapor) ***Inorganic/Particulate***
Concentration in Emission Stream (ppmv) ***$1.57x10^{-4}$***	Vapor Pressure (in. Hg @ °F) ***0 in Hg @77°F***
Solubility ***1,660 g/L in water @ 77°F***	Molecular Weight (lb/lb-mole) ***51.99***
Absorptive Properties -	

Pollutant Emitted ***Chromium***	Chemical Abstract Services (CAS) Number ***7440-47-3***
Proposed Emission Rate (lb/hr) ***$1.01x10^{-4}$***	Emission Source (describe) ***Process Point***
Source Classification (process point, process fugitive, area fugitive) ***Process Point***	Pollutant Class and Form (organic/inorganic - particulate/vapor) ***Inorganic/Particulate***
Concentration in Emission Stream (ppmv) ***$7.87x10^{-4}$***	Vapor Pressure (in. Hg @ °F) ***0 in Hg @ 77°F***
Solubility ***Insoluble in water***	Molecular Weight (lb/lb-mole) ***51.99***
Absorptive Properties -	

Pollutant Emitted ***Cobalt***	Chemical Abstract Services (CAS) Number ***7440-48-4***
Proposed Emission Rate (lb/hr) ***$5.90x10^{-6}$***	Emission Source (describe) ***Process Point***
Source Classification (process point, process fugitive, area fugitive) ***Process Point***	Pollutant Class and Form (organic/inorganic - particulate/vapor) ***Inorganic/Particulate***
Concentration in Emission Stream (ppmv) ***$4.07x10^{-5}$***	Vapor Pressure (in. Hg @ °F) ***0 in Hg @ 77°F***
Solubility ***Insoluble in water***	Molecular Weight (lb/lb-mole) ***58.93***
Absorptive Properties -	

Pollutant Emitted ***Manganese***	Chemical Abstract Services (CAS) Number
Proposed Emission Rate (lb/hr) ***$2.66x10^{-5}$***	Emission Source (describe) ***Process Point***
Source Classification (process point, process fugitive, area fugitive) ***Process Point***	Pollutant Class and Form (organic/inorganic - particulate/vapor) ***Inorganic/Particulate***
Concentration in Emission Stream (ppmv) ***$1.97x10^{-4}$***	Vapor Pressure (in. Hg @ °F) ***0 in Hg @ 77 °F***
Solubility ***Insoluble in water***	Molecular Weight (lb/lb-mole) ***54.94***
Absorptive Properties -	

Pollutant Emitted ***Mercury***	Chemical Abstract Services (CAS) Number ***7439-97-6***
Proposed Emission Rate (lb/hr) ***$1.80x10^{-5}$***	Emission Source (describe) ***Process Point***
Source Classification (process point, process fugitive, area fugitive) ***Process Point***	Pollutant Class and Form (organic/inorganic - particulate/vapor) ***Inorganic/Particulate***
Concentration in Emission Stream (ppmv) ***$3.64x10^{-5}$***	Vapor Pressure (in. Hg @ °F) ***$7.85x10^{-5}$ in Hg @ 77 °F***
Solubility ***Insoluble in water***	Molecular Weight (lb/lb-mole) ***200.59***
Absorptive Properties -	

Pollutant Emitted ***Nickel***	Chemical Abstract Services (CAS) Number ***7044-02-0***
Proposed Emission Rate (lb/hr) ***$1.51x10^{-4}$***	Emission Source (describe) ***Process Point***
Source Classification (process point, process fugitive, area fugitive) ***Process Point***	Pollutant Class and Form (organic/inorganic - particulate/vapor) ***Inorganic/Particulate***
Concentration in Emission Stream (ppmv) ***$1.05x10^{-3}$***	Vapor Pressure (in. Hg @ °F) ***0 in Hg Q 77°F***
Solubility ***Insoluble in water***	Molecular Weight (lb/lb-mole) ***58.69***
Absorptive Properties -	

Pollutant Emitted ***Selenium***	Chemical Abstract Services (CAS) Number ***7782-49-2***
Proposed Emission Rate (lb/hr) ***$6.34x10^{-5}$***	Emission Source (describe) ***Process Point***
Source Classification (process point, process fugitive, area fugitive) ***Process Point***	Pollutant Class and Form (organic/inorganic - particulate/vapor) ***Inorganic/Particulate***
Concentration in Emission Stream (ppmv) ***$3.26x10^{-4}$***	Vapor Pressure (in. Hg @ °F) ***0.29 in Hg @ 807***
Solubility ***Insoluble in water***	Molecular Weight (lb/lb-mole) ***78.96***
Absorptive Properties -	

Signature of Applicant	Date 9/26/2016

SEND COMPLETED APPLICATION AND ALL ATTACHMENTS TO:

North Dakota Department of
Health Division of Air Quality
918 E Divide Ave., 2nd Floor
Bismarck, ND 58501-1947
(701) 328-5188

PERMIT APPLICATION FOR
HAZARDOUS AIR POLLUTANT (HAP) SOURCES

NORTH DAKOTA DEPARTMENT OF HEALTH
DIVISION OF AIR QUALITY
SFN 8329 (09-12)

SECTION A1 - APPLICANT INFORMATION

Name of Firm or Organization ***Meridian Energy Group - Davis Refinery***		
Applicant's Name ***Tom Williams***		
Title ***VP of Planning &Permitting***	Telephone Number ***(707) 299-0182***	E-mail Address ***twilliams@meridianenergygroup.inc***
Mailing Address (Street & No.) ***2062 Business Center Drive, Suite 115***		
City ***Irvine***	State ***CA***	ZIP Code ***92612***

SECTION A2 - FACILITY INFORMATION

Contact Person for Air Pollution Matters ***Tom Johnson***		
Title ***Vice President of Operations***	Telephone Number ***(409)795-0792***	E-mail Address ***tjohnson@meridianenergygroup.inc***
Facility Address (Street & No. or Lat/Long to Nearest Second) ***37th Street / 46°52'45"N/103°14'55" W***		
City ***Belfield***	State ***ND***	ZIP Code ***58622***
County ***Billings***	Number of Employees at Location ***TBD***	
Land Area at Plant Site ***261*** Acres (or) Sq. Ft.	MSL Elevation at Plant ***2,685 feet***	

Describe Nature of Business/Process

Petroleum Refining / Vacuum Distillation Unit / Vacuum Heater 1

SECTION B – STACK DATA

Inside Diameter (ft) ***6.5***	Height Above Grade (ft) ***125***	
Gas Temperature at Exit (°F) ***600.4***	Gas Velocity at Exit (ft/sec) ***16.9***	Gas Volume (scfm) ***33,610.60***
Basis of any Estimates (attach separate sheet if necessary) ***Engineering data and Emission factors from Table 1.4-2. AP 42, Chapter 1: External Combustion Sources. See Document P-5715043-01-001-18042-I001 "EMISSIONS INVENTORY" and P-5715043-01-001-18035-I001 "BACT Analysis"***		
Are Emission Control Devices in Place? If YES – Complete SFN 8532		Yes ☒ No ☐
Nearest Residences or Building ***Utility building***	Distance (ft) ***815ft***	Direction ***South***
Nearest Property Line ***Fenceline***	Distance (ft) ***905 ft***	Direction ***East***

SECTION C – EMISSION STREAM DATA

Source ID No. From SFN 8516 ***103-H-0301***	Mean Particle Diameter (μm) ***TBD***
Flow Rate (scfm) ***33,610.60***	Drift Velocity (ft/sec) ***16.9***
Stream Temperature (°F) ***600.4***	Particulate Concentration (gr/dscf) ***TBD***
Moisture Content (%) ***TBD***	Halogens or Metals Present? ***Metals***
Pressure (in. Hg) ***TBD***	Organic Content (ppmv) ***$1.79x10^{-1}$***
Heat Content (Btu/scfm) ***TBD***	O_2 Content (%) ***N/A***

SECTION D – POLLUTANT SPECIFIC DATA
(Complete One Box for Each Pollutant in Emission Stream)

Pollutant Emitted ***Acetaldehyde***	Chemical Abstract Services (CAS) Number ***75-07-0***
Proposed Emission Rate (lb/hr) ***$2.29x10^{-4}$***	Emission Source (describe) ***Process Point***
Source Classification (process point, process fugitive, area fugitive) ***Process Point***	Pollutant Class and Form (organic/inorganic - particulate/vapor) ***Organic Vapor***
Concentration in Emission Stream (ppmv) ***$2.0x10^{-3}$***	Vapor Pressure (in. Hg @ °F) ***35.51 in Hg @ 68°C***
Solubility ***$1x10^{+6}$ mg/L in water @ 77°F***	Molecular Weight (lb/lb-mole) ***44.05***
Absorptive Properties -	

Pollutant Emitted ***Benzene***	Chemical Abstract Services (CAS) Number ***71-43-2***
Proposed Emission Rate (lb/hr) ***$4.01x10^{-5}$***	Emission Source (describe) ***Process Point***
Source Classification (process point, process fugitive, area fugitive) ***Process Point***	Pollutant Class and Form (organic/inorganic - particulate/vapor) ***Organic /Vapor***
Concentration in Emission Stream (ppmv) ***$1.97x10^{-4}$***	Vapor Pressure (in. Hg @ °F) ***3.73 in Hg @ 77 °F***
Solubility ***In water $1.79x10^{3}$ mg/L @ 77 °F***	Molecular Weight (lb/lb-mole) ***78.11***
Absorptive Properties -	

Pollutant Emitted ***Dichlorobenzene***	Chemical Abstract Services (CAS) Number ***Varies***
Proposed Emission Rate (lb/hr) ***$2.29x10^{-5}$***	Emission Source (describe) ***Process Point***
Source Classification (process point, process fugitive, area fugitive) ***Process Point***	Pollutant Class and Form (organic/inorganic - particulate/vapor) ***Organic /Vapor***
Concentration in Emission Stream (ppmv) ***$6.00x10^{-5}$***	Vapor Pressure (in. Hg @ °F) ***Varies***
Solubility ***Varies***	Molecular Weight (lb/lb-mole) ***147.00***
Absorptive Properties -	

Pollutant Emitted ***Ethylbenzene***	Chemical Abstract Services (CAS) Number ***100-41-4***
Proposed Emission Rate (lb/hr) ***$3.06x10^{-4}$***	Emission Source (describe) ***Process Point***
Source Classification (process point, process fugitive, area fugitive) ***Process Point***	Pollutant Class and Form (organic/inorganic - particulate/vapor) ***Organic /Vapor***
Concentration in Emission Stream (ppmv) ***$1.11x10^{-3}$***	Vapor Pressure (in. Hg @ °F) ***0.37 in Hg @ 77°F***
Solubility ***In water 0.014 g/100mL @ 59 °F***	Molecular Weight (lb/lb-mole) ***106.17***
Absorptive Properties -	

Pollutant Emitted ***Formaldehyde***	Chemical Abstract Services (CAS) Number ***50-00-0***
Proposed Emission Rate (lb/hr) ***$1.41x10^{-3}$***	Emission Source (describe) ***Process Point***
Source Classification (process point, process fugitive, area fugitive) ***Process Point***	Pollutant Class and Form (organic/inorganic - particulate/vapor) ***Organic /Vapor***
Concentration in Emission Stream (ppmv) ***$1.81x10^{-2}$***	Vapor Pressure (in. Hg @ °F) ***0.15 in Hg @ 77 °F***
Solubility ***In water 4.00 $x10^{5}$ mg/L @ 68°F***	Molecular Weight (lb/lb-mole) ***30.03***
Absorptive Properties -	

Pollutant Emitted ***Hexane***	Chemical Abstract Services (CAS) Number ***110-54-5***
Proposed Emission Rate (lb/hr) ***$3.44x10^{-2}$***	Emission Source (describe) ***Process Point***
Source Classification (process point, process fugitive, area fugitive) ***Process Point***	Pollutant Class and Form (organic/inorganic - particulate/vapor) ***Organic /Vapor***
Concentration in Emission Stream (ppmv) ***$1.53x10^{-1}$***	Vapor Pressure (in. Hg @ °F) ***5.90 in Hg @ 68 °F***
Solubility ***Insoluble in water***	Molecular Weight (lb/lb-mole) ***86.1***
Absorptive Properties -	

Pollutant Emitted ***Naphthalene***	Chemical Abstract Services (CAS) Number ***91-20-3***
Proposed Emission Rate (lb/hr) ***$1.15x10^{-5}$***	Emission Source (describe) ***Process Point***
Source Classification (process point, process fugitive, area fugitive) ***Process Point***	Pollutant Class and Form (organic/inorganic - particulate/vapor) ***Organic /Vapor***
Concentration in Emission Stream (ppmv) ***$3.44x10^{-5}$***	Vapor Pressure (in. Hg @ °F) ***0.003 in Hg @ 77 °F***
Solubility ***In water 31 mg/L @ 77 °F***	Molecular Weight (lb/lb-mole) ***128.17***
Absorptive Properties -	

Pollutant Emitted ***Toluene***	Chemical Abstract Services (CAS) Number ***108-88-3***
Proposed Emission Rate (lb/hr) ***$6.31x10^{-5}$***	Emission Source (describe) ***Process Point***
Source Classification (process point, process fugitive, area fugitive) ***Process Point***	Pollutant Class and Form (organic/inorganic - particulate/vapor) ***Organic /Vapor***
Concentration in Emission Stream (ppmv) ***$2.63x10^{-4}$***	Vapor Pressure (in. Hg @ °F) ***1.12 in Hg @ 77°F***
Solubility ***In water 526 mg/L @ 77°F***	Molecular Weight (lb/lb-mole) ***92.14***
Absorptive Properties -	

Pollutant Emitted ***Xylene***	Chemical Abstract Services (CAS) Number ***95-47-6***
Proposed Emission Rate (lb/hr) ***$4.78x10^{-4}$***	Emission Source (describe) ***Process Point***
Source Classification (process point, process fugitive, area fugitive) ***Process Point***	Pollutant Class and Form (organic/inorganic - particulate/vapor) ***Organic /Vapor***
Concentration in Emission Stream (ppmv) ***$1.73x10^{-3}$***	Vapor Pressure (in. Hg @ °F) ***0.26 in Hg @ 77°F***
Solubility ***In water 178 mg/L @ 77°F***	Molecular Weight (lb/lb-mole) ***106.16***
Absorptive Properties -	

Pollutant Emitted ***PAH***	Chemical Abstract Services (CAS) Number ***N/A***
Proposed Emission Rate (lb/hr) ***$8.14x10^{-5}$***	Emission Source (describe) ***Process Point***
Source Classification (process point, process fugitive, area fugitive) ***Process Point***	Pollutant Class and Form (organic/inorganic - particulate/vapor) ***Organic /Vapor***
Concentration in Emission Stream (ppmv) ***$3.21x10^{-4}$***	Vapor Pressure (in. Hg @ °F) ***N/A***
Solubility ***N/A***	Molecular Weight (lb/lb-mole) ***TBD***
Absorptive Properties -	

Pollutant Emitted ***Antimony***	Chemical Abstract Services (CAS) Number ***7740-36-0***
Proposed Emission Rate (lb/hr) ***$3.98x10^{-5}$***	Emission Source (describe) ***Process Point***
Source Classification (process point, process fugitive, area fugitive) ***Process Point***	Pollutant Class and Form (organic/inorganic - particulate/vapor) ***Inorganic/particulate***
Concentration in Emission Stream (ppmv) ***$1.25x10^{-4}$***	Vapor Pressure (in. Hg @ °F) ***0 in Hg @ 77°F***
Solubility ***Insoluble in water***	Molecular Weight (lb/lb-mole) ***121.76***
Absorptive Properties -	

Pollutant Emitted ***Arsenic***	Chemical Abstract Services (CAS) Number ***7440-38-2***
Proposed Emission Rate (lb/hr) ***$1.53x10^{-5}$***	Emission Source (describe) ***Process Point***
Source Classification (process point, process fugitive, area fugitive) ***Process Point***	Pollutant Class and Form (organic/inorganic - particulate/vapor) ***Inorganic/Particulate***
Concentration in Emission Stream (ppmv) ***$7.84x10^{-5}$***	Vapor Pressure (in. Hg @ °F) ***0 in Hg @ 77°F***
Solubility ***Insoluble in water***	Molecular Weight (lb/lb-mole)
Absorptive Properties -	

Pollutant Emitted ***Beryllium***	Chemical Abstract Services (CAS) Number ***7440-41-7***
Proposed Emission Rate (lb/hr) ***$9.94x10^{-6}$***	Emission Source (describe) ***Process Point***
Source Classification (process point, process fugitive, area fugitive) ***Process Point***	Pollutant Class and Form (organic/inorganic - particulate/vapor) ***Inorganic/Particulate***
Concentration in Emission Stream (ppmv) ***$4.24x10^{-4}$***	Vapor Pressure (in. Hg @ °F) ***0 in Hg @ 77°F***
Solubility ***Insoluble in water***	Molecular Weight (lb/lb-mole) ***9.01***
Absorptive Properties -	

Pollutant Emitted ***Cadmium***	Chemical Abstract Services (CAS) Number ***7440-43-9***
Proposed Emission Rate (lb/hr) ***$8.41x10^{-5}$***	Emission Source (describe) ***Process Point***
Source Classification (process point, process fugitive, area fugitive) ***Process Point***	Pollutant Class and Form (organic/inorganic - particulate/vapor) ***Inorganic/Particulate***
Concentration in Emission Stream (ppmv) ***$2.87x10^{-4}$***	Vapor Pressure (in. Hg @ °F) ***0 in Hg@ 77°F***
Solubility ***Insoluble in water***	Molecular Weight (lb/lb-mole)
Absorptive Properties -	

Pollutant Emitted ***Chromium (hexavalent)***	Chemical Abstract Services (CAS) Number ***1333-82-0***
Proposed Emission Rate (lb/hr) ***$2.14x10^{-5}$***	Emission Source (describe) ***Process Point***
Source Classification (process point, process fugitive, area fugitive) ***Process Point***	Pollutant Class and Form (organic/inorganic - particulate/vapor) ***Inorganic/Particulate***
Concentration in Emission Stream (ppmv) ***$1.58x10^{-4}$***	Vapor Pressure (in. Hg @ °F) ***0 in Hg @77°F***
Solubility ***1,660 g/L in water @ 77°F***	Molecular Weight (lb/lb-mole) ***51.99***
Absorptive Properties -	

Pollutant Emitted ***Chromium***	Chemical Abstract Services (CAS) Number ***7440-47-3***
Proposed Emission Rate (lb/hr) ***$1.07x10^{-4}$***	Emission Source (describe) ***Process Point***
Source Classification (process point, process fugitive, area fugitive) ***Process Point***	Pollutant Class and Form (organic/inorganic - particulate/vapor) ***Inorganic/Particulate***
Concentration in Emission Stream (ppmv) ***$7.91x10^{-4}$***	Vapor Pressure (in. Hg @ °F) ***0 in Hg @ 77°F***
Solubility ***Insoluble in water***	Molecular Weight (lb/lb-mole) ***51.99***
Absorptive Properties -	

Pollutant Emitted ***Cobalt***	Chemical Abstract Services (CAS) Number ***7440-48-4***
Proposed Emission Rate (lb/hr) ***$6.27x10^{-6}$***	Emission Source (describe) ***Process Point***
Source Classification (process point, process fugitive, area fugitive) ***Process Point***	Pollutant Class and Form (organic/inorganic - particulate/vapor) ***Inorganic/Particulate***
Concentration in Emission Stream (ppmv) ***$4.09x10^{-5}$***	Vapor Pressure (in. Hg @ °F) ***0 in Hg @ 77°F***
Solubility ***Insoluble in water***	Molecular Weight (lb/lb-mole) ***58.93***
Absorptive Properties -	

Pollutant Emitted ***Manganese***	Chemical Abstract Services (CAS) Number
Proposed Emission Rate (lb/hr) ***$2.83x10^{-5}$***	Emission Source (describe) ***Process Point***
Source Classification (process point, process fugitive, area fugitive) ***Process Point***	Pollutant Class and Form (organic/inorganic - particulate/vapor) ***Inorganic/Particulate***
Concentration in Emission Stream (ppmv) ***$1.98x10^{-4}$***	Vapor Pressure (in. Hg @ °F) ***0 in Hg @ 77 °F***
Solubility ***Insoluble in water***	Molecular Weight (lb/lb-mole) ***54.94***
Absorptive Properties -	

Pollutant Emitted ***Mercury***	Chemical Abstract Services (CAS) Number ***7439-97-6***
Proposed Emission Rate (lb/hr) ***$1.91x10^{-5}$***	Emission Source (describe) ***Process Point***
Source Classification (process point, process fugitive, area fugitive) ***Process Point***	Pollutant Class and Form (organic/inorganic - particulate/vapor) ***Inorganic/Particulate***
Concentration in Emission Stream (ppmv) ***$3.66x10^{-5}$***	Vapor Pressure (in. Hg @ °F) ***$7.85x10^{-5}$ in Hg @ 77 °F***
Solubility ***Insoluble in water***	Molecular Weight (lb/lb-mole) ***200.59***
Absorptive Properties -	

Pollutant Emitted ***Nickel***	Chemical Abstract Services (CAS) Number ***7044-02-0***
Proposed Emission Rate (lb/hr) ***$1.61x10^{-4}$***	Emission Source (describe) ***Process Point***
Source Classification (process point, process fugitive, area fugitive) ***Process Point***	Pollutant Class and Form (organic/inorganic - particulate/vapor) ***Inorganic/Particulate***
Concentration in Emission Stream (ppmv) ***$1.05x10^{-3}$***	Vapor Pressure (in. Hg @ °F) ***0 in Hg Q 77°F***
Solubility ***Insoluble in water***	Molecular Weight (lb/lb-mole) ***58.69***
Absorptive Properties -	

Pollutant Emitted ***Selenium***	Chemical Abstract Services (CAS) Number ***7782-49-2***
Proposed Emission Rate (lb/hr) ***$6.73x10^{-5}$***	Emission Source (describe) ***Process Point***
Source Classification (process point, process fugitive, area fugitive) ***Process Point***	Pollutant Class and Form (organic/inorganic - particulate/vapor) ***Inorganic/Particulate***
Concentration in Emission Stream (ppmv) ***$3.27x10^{-4}$***	Vapor Pressure (in. Hg @ °F) ***0.29 in Hg @ 807***
Solubility ***Insoluble in water***	Molecular Weight (lb/lb-mole) ***78.96***
Absorptive Properties -	

Signature of Applicant	Date 09/26/2016

SEND COMPLETED APPLICATION AND ALL ATTACHMENTS TO:

North Dakota Department of
Health Division of Air Quality
918 E Divide Ave., 2nd Floor
Bismarck, ND 58501-1947
(701) 328-5188

PERMIT APPLICATION FOR
HAZARDOUS AIR POLLUTANT (HAP) SOURCES

NORTH DAKOTA DEPARTMENT OF HEALTH
DIVISION OF AIR QUALITY
SFN 8329 (09-12)

SECTION A1 - APPLICANT INFORMATION

Name of Firm or Organization ***Meridian Energy Group - Davis Refinery***		
Applicant's Name ***Tom Williams***		
Title ***VP of Planning &Permitting***	Telephone Number ***(707) 299-0182***	E-mail Address ***twilliams@meridianenergygroup.inc***
Mailing Address (Street & No.) ***2062 Business Center Drive, Suite 115***		
City ***Irvine***	State ***CA***	ZIP Code ***92612***

SECTION A2 - FACILITY INFORMATION

Contact Person for Air Pollution Matters ***Tom Johnson***		
Title ***Vice President of Operations***	Telephone Number ***(409)795-0792***	E-mail Address ***tjohnson@meridianenergygroup.inc***
Facility Address (Street & No. or Lat/Long to Nearest Second) ***37th Street / 46°52'45"N/103°14'55" W***		
City ***Belfield***	State ***ND***	ZIP Code ***58622***
County ***Billings***	Number of Employees at Location ***TBD***	
Land Area at Plant Site ***261*** Acres (or) Sq. Ft.	MSL Elevation at Plant ***2,685 feet***	

Describe Nature of Business/Process

Petroleum Refining / Vacuum Distillation Unit / Vacuum Heater 2

SECTION B – STACK DATA

Inside Diameter (ft) ***5.1***	Height Above Grade (ft) ***120***	
Gas Temperature at Exit (°F) ***600.1***	Gas Velocity at Exit (ft/sec) ***20.8***	Gas Volume (scfm) ***25,334.29***
Basis of any Estimates (attach separate sheet if necessary) ***Engineering data and Emission factors from Table 1.4-2. AP 42, Chapter 1: External Combustion Sources. See Document P-5715043-01-001-18042-I001 "EMISSIONS INVENTORY" and P-5715043-01-001-18035-I001 "BACT Analysis"***		
Are Emission Control Devices in Place? If YES – Complete SFN 8532		Yes ☒ No ☐
Nearest Residences or Building ***Utility building***	Distance (ft) ***402 ft***	Direction ***South***
Nearest Property Line ***Fenceline***	Distance (ft) ***509 ft***	Direction ***Southeast***

SECTION C – EMISSION STREAM DATA

Source ID No. From SFN 8516 ***103-H-0302***	Mean Particle Diameter (μm) ***TBD***
Flow Rate (scfm) ***25,334.29***	Drift Velocity (ft/sec) ***20.8***
Stream Temperature (°F) ***600.1***	Particulate Concentration (gr/dscf) ***TBD***
Moisture Content (%) ***TBD***	Halogens or Metals Present? ***Metals***
Pressure (in. Hg) ***TBD***	Organic Content (ppmv) ***$1.79x10^{-1}$***
Heat Content (Btu/scfm) ***TBD***	O_2 Content (%) ***N/A***

SECTION D – POLLUTANT SPECIFIC DATA
(Complete One Box for Each Pollutant in Emission Stream)

Pollutant Emitted ***Acetaldehyde***	Chemical Abstract Services (CAS) Number ***75-07-0***
Proposed Emission Rate (lb/hr) ***$1.73x10^{-4}$***	Emission Source (describe) ***Process Point***
Source Classification (process point, process fugitive, area fugitive) ***Process Point***	Pollutant Class and Form (organic/inorganic - particulate/vapor) ***Organic Vapor***
Concentration in Emission Stream (ppmv) ***$2.00x10^{-3}$***	Vapor Pressure (in. Hg @ °F) ***35.51 in Hg @ 68°C***
Solubility ***$1x10^{+6}$ mg/L in water @ 77°F***	Molecular Weight (lb/lb-mole) ***44.05***
Absorptive Properties -	

Pollutant Emitted ***Benzene***	Chemical Abstract Services (CAS) Number ***71-43-2***
Proposed Emission Rate (lb/hr) ***$3.03x10^{-5}$***	Emission Source (describe) ***Process Point***
Source Classification (process point, process fugitive, area fugitive) ***Process Point***	Pollutant Class and Form (organic/inorganic - particulate/vapor) ***Organic /Vapor***
Concentration in Emission Stream (ppmv) ***$1.97x10^{-4}$***	Vapor Pressure (in. Hg @ °F) ***3.73 in Hg @ 77 °F***
Solubility ***In water $1.79x10^{3}$ mg/L @ 77 °F***	Molecular Weight (lb/lb-mole) ***78.11***
Absorptive Properties -	

Pollutant Emitted ***Dichlorobenzene***	Chemical Abstract Services (CAS) Number ***Varies***
Proposed Emission Rate (lb/hr) ***$1.73x10^{-5}$***	Emission Source (describe) ***Process Point***
Source Classification (process point, process fugitive, area fugitive) ***Process Point***	Pollutant Class and Form (organic/inorganic - particulate/vapor) ***Organic /Vapor***
Concentration in Emission Stream (ppmv) ***$5.99x10^{-5}$***	Vapor Pressure (in. Hg @ °F) ***Varies***
Solubility ***Varies***	Molecular Weight (lb/lb-mole) ***147.00***
Absorptive Properties -	

Pollutant Emitted ***Ethylbenzene***	Chemical Abstract Services (CAS) Number ***100-41-4***
Proposed Emission Rate (lb/hr) ***$2.31x10^{-4}$***	Emission Source (describe) ***Process Point***
Source Classification (process point, process fugitive, area fugitive) ***Process Point***	Pollutant Class and Form (organic/inorganic - particulate/vapor) ***Organic /Vapor***
Concentration in Emission Stream (ppmv) ***$1.11x10^{-3}$***	Vapor Pressure (in. Hg @ °F) ***0.37 in Hg @ 77°F***
Solubility ***In water 0.014 g/100mL @ 59 °F***	Molecular Weight (lb/lb-mole) ***106.17***
Absorptive Properties -	

Pollutant Emitted ***Formaldehyde***	Chemical Abstract Services (CAS) Number ***50-00-0***
Proposed Emission Rate (lb/hr) ***$1.07x10^{-3}$***	Emission Source (describe) ***Process Point***
Source Classification (process point, process fugitive, area fugitive) ***Process Point***	Pollutant Class and Form (organic/inorganic - particulate/vapor) ***Organic /Vapor***
Concentration in Emission Stream (ppmv) ***$1.81x10^{-2}$***	Vapor Pressure (in. Hg @ °F) ***0.15 in Hg @ 77 °F***
Solubility ***In water 4.00 $x10^{5}$ mg/L @ 68°F***	Molecular Weight (lb/lb-mole) ***30.03***
Absorptive Properties -	

Pollutant Emitted ***Hexane***	Chemical Abstract Services (CAS) Number ***110-54-5***
Proposed Emission Rate (lb/hr) ***$2.59x10^{-2}$***	Emission Source (describe) ***Process Point***
Source Classification (process point, process fugitive, area fugitive) ***Process Point***	Pollutant Class and Form (organic/inorganic - particulate/vapor) ***Organic /Vapor***
Concentration in Emission Stream (ppmv) ***$1.53x10^{-1}$***	Vapor Pressure (in. Hg @ °F) ***5.90 in Hg @ 68 °F***
Solubility ***Insoluble in water***	Molecular Weight (lb/lb-mole) ***86.1***
Absorptive Properties -	

Pollutant Emitted ***Naphthalene***	Chemical Abstract Services (CAS) Number ***91-20-3***
Proposed Emission Rate (lb/hr) ***$8.65x10^{-6}$***	Emission Source (describe) ***Process Point***
Source Classification (process point, process fugitive, area fugitive) ***Process Point***	Pollutant Class and Form (organic/inorganic - particulate/vapor) ***Organic /Vapor***
Concentration in Emission Stream (ppmv) ***$3.44x10^{-5}$***	Vapor Pressure (in. Hg @ °F) ***0.003 in Hg @ 77 °F***
Solubility ***In water 31 mg/L @ 77 °F***	Molecular Weight (lb/lb-mole) ***128.17***
Absorptive Properties -	

Pollutant Emitted ***Toluene***	Chemical Abstract Services (CAS) Number ***108-88-3***
Proposed Emission Rate (lb/hr) ***4.76 x10^{-5}***	Emission Source (describe) ***Process Point***
Source Classification (process point, process fugitive, area fugitive) ***Process Point***	Pollutant Class and Form (organic/inorganic - particulate/vapor) ***Organic /Vapor***
Concentration in Emission Stream (ppmv) ***2.63x10^{-4}***	Vapor Pressure (in. Hg @ °F) ***1.12 in Hg @ 77°F***
Solubility ***In water 526 mg/L @ 77°F***	Molecular Weight (lb/lb-mole) ***92.14***
Absorptive Properties -	

Pollutant Emitted ***Xylene***	Chemical Abstract Services (CAS) Number ***95-47-6***
Proposed Emission Rate (lb/hr) ***3.60x10^{-4}***	Emission Source (describe) ***Process Point***
Source Classification (process point, process fugitive, area fugitive) ***Process Point***	Pollutant Class and Form (organic/inorganic - particulate/vapor) ***Organic /Vapor***
Concentration in Emission Stream (ppmv) ***1.73x10^{-3}***	Vapor Pressure (in. Hg @ °F) ***0.26 in Hg @ 77°F***
Solubility ***In water 178 mg/L @ 77°F***	Molecular Weight (lb/lb-mole) ***106.16***
Absorptive Properties -	

Pollutant Emitted ***PAH***	Chemical Abstract Services (CAS) Number ***N/A***
Proposed Emission Rate (lb/hr) ***6.14x10^{-5}***	Emission Source (describe) ***Process Point***
Source Classification (process point, process fugitive, area fugitive) ***Process Point***	Pollutant Class and Form (organic/inorganic - particulate/vapor) ***Organic /Vapor***
Concentration in Emission Stream (ppmv) ***3.21x10^{-4}***	Vapor Pressure (in. Hg @ °F) ***N/A***
Solubility ***N/A***	Molecular Weight (lb/lb-mole) ***TBD***
Absorptive Properties -	

Pollutant Emitted ***Antimony***	Chemical Abstract Services (CAS) Number ***7740-36-0***
Proposed Emission Rate (lb/hr) ***3.00x10^{-5}***	Emission Source (describe) ***Process Point***
Source Classification (process point, process fugitive, area fugitive) ***Process Point***	Pollutant Class and Form (organic/inorganic - particulate/vapor) ***Inorganic/particulate***
Concentration in Emission Stream (ppmv) ***1.25x10^{-4}***	Vapor Pressure (in. Hg @ °F) ***0 in Hg @ 77°F***
Solubility ***Insoluble in water***	Molecular Weight (lb/lb-mole) ***121.76***
Absorptive Properties -	

Pollutant Emitted ***Arsenic***	Chemical Abstract Services (CAS) Number ***7440-38-2***
Proposed Emission Rate (lb/hr) ***$1.15x10^{-5}$***	Emission Source (describe) ***Process Point***
Source Classification (process point, process fugitive, area fugitive) ***Process Point***	Pollutant Class and Form (organic/inorganic - particulate/vapor) ***Inorganic/Particulate***
Concentration in Emission Stream (ppmv) ***$7.84x10^{-5}$***	Vapor Pressure (in. Hg @ °F) ***0 in Hg @ 77°F***
Solubility ***Insoluble in water***	Molecular Weight (lb/lb-mole)
Absorptive Properties -	

Pollutant Emitted ***Beryllium***	Chemical Abstract Services (CAS) Number ***7440-41-7***
Proposed Emission Rate (lb/hr) ***$7.49x10^{-6}$***	Emission Source (describe) ***Process Point***
Source Classification (process point, process fugitive, area fugitive) ***Process Point***	Pollutant Class and Form (organic/inorganic - particulate/vapor) ***Inorganic/Particulate***
Concentration in Emission Stream (ppmv) ***$4.24x10^{-4}$***	Vapor Pressure (in. Hg @ °F) ***0 in Hg @ 77°F***
Solubility ***Insoluble in water***	Molecular Weight (lb/lb-mole) ***9.01***
Absorptive Properties -	

Pollutant Emitted ***Cadmium***	Chemical Abstract Services (CAS) Number ***7440-43-9***
Proposed Emission Rate (lb/hr) ***$6.34x10^{-5}$***	Emission Source (describe) ***Process Point***
Source Classification (process point, process fugitive, area fugitive) ***Process Point***	Pollutant Class and Form (organic/inorganic - particulate/vapor) ***Inorganic/Particulate***
Concentration in Emission Stream (ppmv) ***$2.87x10^{-4}$***	Vapor Pressure (in. Hg @ °F) ***0 in Hg@ 77°F***
Solubility ***Insoluble in water***	Molecular Weight (lb/lb-mole)
Absorptive Properties -	

Pollutant Emitted ***Chromium (hexavalent)***	Chemical Abstract Services (CAS) Number ***1333-82-0***
Proposed Emission Rate (lb/hr) ***$1.61x10^{-5}$***	Emission Source (describe) ***Process Point***
Source Classification (process point, process fugitive, area fugitive) ***Process Point***	Pollutant Class and Form (organic/inorganic - particulate/vapor) ***Inorganic/Particulate***
Concentration in Emission Stream (ppmv) ***$1.58x10^{-4}$***	Vapor Pressure (in. Hg @ °F) ***0 in Hg @77°F***
Solubility ***1,660 g/L in water @ 77°F***	Molecular Weight (lb/lb-mole) ***51.99***
Absorptive Properties -	

Pollutant Emitted ***Chromium***	Chemical Abstract Services (CAS) Number ***7440-47-3***
Proposed Emission Rate (lb/hr) ***$8.07x10^{-5}$***	Emission Source (describe) ***Process Point***
Source Classification (process point, process fugitive, area fugitive) ***Process Point***	Pollutant Class and Form (organic/inorganic - particulate/vapor) ***Inorganic/Particulate***
Concentration in Emission Stream (ppmv) ***$7.91x10^{-4}$***	Vapor Pressure (in. Hg @ °F) ***0 in Hg @ 77°F***
Solubility ***Insoluble in water***	Molecular Weight (lb/lb-mole) ***51.99***
Absorptive Properties -	

Pollutant Emitted ***Cobalt***	Chemical Abstract Services (CAS) Number ***7440-48-4***
Proposed Emission Rate (lb/hr) ***$4.73x10^{-6}$***	Emission Source (describe) ***Process Point***
Source Classification (process point, process fugitive, area fugitive) ***Process Point***	Pollutant Class and Form (organic/inorganic - particulate/vapor) ***Inorganic/Particulate***
Concentration in Emission Stream (ppmv) ***$4.09x10^{-5}$***	Vapor Pressure (in. Hg @ °F) ***0 in Hg @ 77°F***
Solubility ***Insoluble in water***	Molecular Weight (lb/lb-mole) ***58.93***
Absorptive Properties -	

Pollutant Emitted ***Manganese***	Chemical Abstract Services (CAS) Number
Proposed Emission Rate (lb/hr) ***$2.13x10^{-5}$***	Emission Source (describe) ***Process Point***
Source Classification (process point, process fugitive, area fugitive) ***Process Point***	Pollutant Class and Form (organic/inorganic - particulate/vapor) ***Inorganic/Particulate***
Concentration in Emission Stream (ppmv) ***$1.98x10^{-4}$***	Vapor Pressure (in. Hg @ °F) ***0 in Hg @ 77 °F***
Solubility ***Insoluble in water***	Molecular Weight (lb/lb-mole) ***54.94***
Absorptive Properties -	

Pollutant Emitted ***Mercury***	Chemical Abstract Services (CAS) Number ***7439-97-6***
Proposed Emission Rate (lb/hr) ***$1.44x10^{-5}$***	Emission Source (describe) ***Process Point***
Source Classification (process point, process fugitive, area fugitive) ***Process Point***	Pollutant Class and Form (organic/inorganic - particulate/vapor) ***Inorganic/Particulate***
Concentration in Emission Stream (ppmv) ***$3.66x10^{-5}$***	Vapor Pressure (in. Hg @ °F) ***$7.85x10^{-5}$ in Hg @ 77 °F***
Solubility ***Insoluble in water***	Molecular Weight (lb/lb-mole) ***200.59***
Absorptive Properties -	

Pollutant Emitted ***Nickel***	Chemical Abstract Services (CAS) Number ***7044-02-0***
Proposed Emission Rate (lb/hr) ***$1.21x10^{-4}$***	Emission Source (describe) ***Process Point***
Source Classification (process point, process fugitive, area fugitive) ***Process Point***	Pollutant Class and Form (organic/inorganic - particulate/vapor) ***Inorganic/Particulate***
Concentration in Emission Stream (ppmv) ***$1.05x10^{-3}$***	Vapor Pressure (in. Hg @ °F) ***0 in Hg Q 77°F***
Solubility ***Insoluble in water***	Molecular Weight (lb/lb-mole) ***58.69***
Absorptive Properties -	

Pollutant Emitted ***Selenium***	Chemical Abstract Services (CAS) Number ***7782-49-2***
Proposed Emission Rate (lb/hr) ***$5.07x10^{-5}$***	Emission Source (describe) ***Process Point***
Source Classification (process point, process fugitive, area fugitive) ***Process Point***	Pollutant Class and Form (organic/inorganic - particulate/vapor) ***Inorganic/Particulate***
Concentration in Emission Stream (ppmv) ***$3.27x10^{-4}$***	Vapor Pressure (in. Hg @ °F) ***0.29 in Hg @ 807***
Solubility ***Insoluble in water***	Molecular Weight (lb/lb-mole) ***78.96***
Absorptive Properties -	

Signature of Applicant	Date 09/26/2016

SEND COMPLETED APPLICATION AND ALL ATTACHMENTS TO:

North Dakota Department of
Health Division of Air Quality
918 E Divide Ave., 2nd Floor
Bismarck, ND 58501-1947
(701) 328-5188

PERMIT APPLICATION FOR
HAZARDOUS AIR POLLUTANT (HAP) SOURCES

NORTH DAKOTA DEPARTMENT OF HEALTH
DIVISION OF AIR QUALITY
SFN 8329 (09-12)

SECTION A1 - APPLICANT INFORMATION

Name of Firm or Organization ***Meridian Energy Group - Davis Refinery***		
Applicant's Name ***Tom Williams***		
Title ***VP of Planning &Permitting***	Telephone Number ***(707) 299-0182***	E-mail Address ***twilliams@meridianenergygroup.inc***
Mailing Address (Street & No.) ***2062 Business Center Drive, Suite 115***		
City ***Irvine***	State ***CA***	ZIP Code ***92612***

SECTION A2 - FACILITY INFORMATION

Contact Person for Air Pollution Matters ***Tom Johnson***		
Title ***Vice President of Operations***	Telephone Number ***(409)795-0792***	E-mail Address ***tjohnson@meridianenergygroup.inc***
Facility Address (Street & No. or Lat/Long to Nearest Second) ***37th Street / 46°52'45"N/103°14'55" W***		
City ***Belfield***	State ***ND***	ZIP Code ***58622***
County ***Billings***	Number of Employees at Location ***TBD***	
Land Area at Plant Site ***261*** Acres (or) Sq. Ft.	MSL Elevation at Plant ***2,685 feet***	

Describe Nature of Business/Process

Petroleum Refining / Heavy Naphtha Hydrotreater / Feed Heater

SECTION B – STACK DATA

Inside Diameter (ft) ***3.0***	Height Above Grade (ft) ***91.0***	
Gas Temperature at Exit (°F) ***787.7***	Gas Velocity at Exit (ft/sec) ***16.2***	Gas Volume (scfm) ***6,866.55***
Basis of any Estimates (attach separate sheet if necessary) ***Engineering data and Emission factors from Table 1.4-2. AP 42, Chapter 1: External Combustion Sources. See Document P-5715043-01-001-18042-I001 "EMISSIONS INVENTORY" and P-5715043-01-001-18035-I001 "BACT Analysis"***		
Are Emission Control Devices in Place? If YES – Complete SFN 8532		Yes ☐ No ☒
Nearest Residences or Building ***Utility building***	Distance (ft) ***580 ft***	Direction ***South***
Nearest Property Line ***Fenceline***	Distance (ft) ***904 ft***	Direction ***Southwest***

SECTION C – EMISSION STREAM DATA

Source ID No. From SFN 8516 ***105-H-0501***	Mean Particle Diameter (μm) ***TBD***
Flow Rate (scfm) ***6,866.55***	Drift Velocity (ft/sec) ***16.2***
Stream Temperature (°F) ***787.7***	Particulate Concentration (gr/dscf) ***TBD***
Moisture Content (%) ***TBD***	Halogens or Metals Present? ***Metals***
Pressure (in. Hg) ***TBD***	Organic Content (ppmv) ***$1.24x10^{-2}$***
Heat Content (Btu/scfm) ***TBD***	O_2 Content (%) ***N/A***

SECTION D – POLLUTANT SPECIFIC DATA
(Complete One Box for Each Pollutant in Emission Stream)

Pollutant Emitted ***Acetaldehyde***	Chemical Abstract Services (CAS) Number ***75-07-0***
Proposed Emission Rate (lb/hr) ***$4.13x10^{-5}$***	Emission Source (describe) ***Process Point***
Source Classification (process point, process fugitive, area fugitive) ***Process Point***	Pollutant Class and Form (organic/inorganic - particulate/vapor) ***Organic Vapor***
Concentration in Emission Stream (ppmv) ***$2.07x10^{-3}$***	Vapor Pressure (in. Hg @ °F) ***35.51 in Hg @ 68°C***
Solubility ***$1x10^{+6}$ mg/L in water @ 77°F***	Molecular Weight (lb/lb-mole) ***44.05***
Absorptive Properties -	

Pollutant Emitted ***Benzene***	Chemical Abstract Services (CAS) Number ***71-43-2***
Proposed Emission Rate (lb/hr) ***$7.22x10^{-6}$***	Emission Source (describe) ***Process Point***
Source Classification (process point, process fugitive, area fugitive) ***Process Point***	Pollutant Class and Form (organic/inorganic - particulate/vapor) ***Organic /Vapor***
Concentration in Emission Stream (ppmv) ***$2.04x10^{-4}$***	Vapor Pressure (in. Hg @ °F) ***3.73 in Hg @ 77 °F***
Solubility ***In water $1.79x10^{3}$ mg/L @ 77 °F***	Molecular Weight (lb/lb-mole) ***78.11***
Absorptive Properties -	

Pollutant Emitted ***Dichlorobenzene***	Chemical Abstract Services (CAS) Number ***Varies***
Proposed Emission Rate (lb/hr) ***$4.13x10^{-6}$***	Emission Source (describe) ***Process Point***
Source Classification (process point, process fugitive, area fugitive) ***Process Point***	Pollutant Class and Form (organic/inorganic - particulate/vapor) ***Organic /Vapor***
Concentration in Emission Stream (ppmv) ***$6.21x10^{-5}$***	Vapor Pressure (in. Hg @ °F) ***Varies***
Solubility ***Varies***	Molecular Weight (lb/lb-mole) ***147.00***
Absorptive Properties -	

Pollutant Emitted ***Ethylbenzene***	Chemical Abstract Services (CAS) Number ***100-41-4***
Proposed Emission Rate (lb/hr) ***$5.50x10^{-5}$***	Emission Source (describe) ***Process Point***
Source Classification (process point, process fugitive, area fugitive) ***Process Point***	Pollutant Class and Form (organic/inorganic - particulate/vapor) ***Organic /Vapor***
Concentration in Emission Stream (ppmv) ***$1.15x10^{-3}$***	Vapor Pressure (in. Hg @ °F) ***0.37 in Hg @ 77°F***
Solubility ***In water 0.014 g/100mL @ 59 °F***	Molecular Weight (lb/lb-mole) ***106.17***
Absorptive Properties -	

Pollutant Emitted ***Formaldehyde***	Chemical Abstract Services (CAS) Number ***50-00-0***
Proposed Emission Rate (lb/hr) ***$2.54x10^{-4}$***	Emission Source (describe) ***Process Point***
Source Classification (process point, process fugitive, area fugitive) ***Process Point***	Pollutant Class and Form (organic/inorganic - particulate/vapor) ***Organic /Vapor***
Concentration in Emission Stream (ppmv) ***$1.87x10^{-2}$***	Vapor Pressure (in. Hg @ °F) ***0.15 in Hg @ 77 °F***
Solubility ***In water 4.00 $x10^{5}$ mg/L @ 68°F***	Molecular Weight (lb/lb-mole) ***30.03***
Absorptive Properties -	

Pollutant Emitted ***Hexane***	Chemical Abstract Services (CAS) Number ***110-54-5***
Proposed Emission Rate (lb/hr) ***$6.19x10^{-3}$***	Emission Source (describe) ***Process Point***
Source Classification (process point, process fugitive, area fugitive) ***Process Point***	Pollutant Class and Form (organic/inorganic - particulate/vapor) ***Organic /Vapor***
Concentration in Emission Stream (ppmv) ***$1.59x10^{-1}$***	Vapor Pressure (in. Hg @ °F) ***5.90 in Hg @ 68 °F***
Solubility ***Insoluble in water***	Molecular Weight (lb/lb-mole) ***86.1***
Absorptive Properties -	

Pollutant Emitted ***Naphthalene***	Chemical Abstract Services (CAS) Number ***91-20-3***
Proposed Emission Rate (lb/hr) ***$2.06x10^{-6}$***	Emission Source (describe) ***Process Point***
Source Classification (process point, process fugitive, area fugitive) ***Process Point***	Pollutant Class and Form (organic/inorganic - particulate/vapor) ***Organic /Vapor***
Concentration in Emission Stream (ppmv) ***$3.56x10^{-5}$***	Vapor Pressure (in. Hg @ °F) ***0.003 in Hg @ 77 °F***
Solubility ***In water 31 mg/L @ 77 °F***	Molecular Weight (lb/lb-mole) ***128.17***
Absorptive Properties -	

Pollutant Emitted ***Toluene***	Chemical Abstract Services (CAS) Number ***108-88-3***
Proposed Emission Rate (lb/hr) ***$1.13x10^{-5}$***	Emission Source (describe) ***Process Point***
Source Classification (process point, process fugitive, area fugitive) ***Process Point***	Pollutant Class and Form (organic/inorganic - particulate/vapor) ***Organic /Vapor***
Concentration in Emission Stream (ppmv) ***$2.72x10^{-4}$***	Vapor Pressure (in. Hg @ °F) ***1.12 in Hg @ 77°F***
Solubility ***In water 526 mg/L @ 77°F***	Molecular Weight (lb/lb-mole) ***92.14***
Absorptive Properties -	

Pollutant Emitted ***Xylene***	Chemical Abstract Services (CAS) Number ***95-47-6***
Proposed Emission Rate (lb/hr) ***$8.59x10^{-5}$***	Emission Source (describe) ***Process Point***
Source Classification (process point, process fugitive, area fugitive) ***Process Point***	Pollutant Class and Form (organic/inorganic - particulate/vapor) ***Organic /Vapor***
Concentration in Emission Stream (ppmv) ***$1.79x10^{-3}$***	Vapor Pressure (in. Hg @ °F) ***0.26 in Hg @ 77°F***
Solubility ***In water 178 mg/L @ 77°F***	Molecular Weight (lb/lb-mole) ***106.16***
Absorptive Properties -	

Pollutant Emitted ***PAH***	Chemical Abstract Services (CAS) Number ***N/A***
Proposed Emission Rate (lb/hr) ***$1.46x10^{-5}$***	Emission Source (describe) ***Process Point***
Source Classification (process point, process fugitive, area fugitive) ***Process Point***	Pollutant Class and Form (organic/inorganic - particulate/vapor) ***Organic /Vapor***
Concentration in Emission Stream (ppmv) ***$3.32x10^{-4}$***	Vapor Pressure (in. Hg @ °F) ***N/A***
Solubility ***N/A***	Molecular Weight (lb/lb-mole) ***TBD***
Absorptive Properties -	

Pollutant Emitted ***Antimony***	Chemical Abstract Services (CAS) Number ***7740-36-0***
Proposed Emission Rate (lb/hr) ***$7.15x10^{-6}$***	Emission Source (describe) ***Process Point***
Source Classification (process point, process fugitive, area fugitive) ***Process Point***	Pollutant Class and Form (organic/inorganic - particulate/vapor) ***Inorganic/particulate***
Concentration in Emission Stream (ppmv) ***$1.30x10^{-4}$***	Vapor Pressure (in. Hg @ °F) ***0 in Hg @ 77°F***
Solubility ***Insoluble in water***	Molecular Weight (lb/lb-mole) ***121.76***
Absorptive Properties -	

Pollutant Emitted ***Arsenic***	Chemical Abstract Services (CAS) Number ***7440-38-2***
Proposed Emission Rate (lb/hr) ***$2.75x10^{-6}$***	Emission Source (describe) ***Process Point***
Source Classification (process point, process fugitive, area fugitive) ***Process Point***	Pollutant Class and Form (organic/inorganic - particulate/vapor) ***Inorganic/Particulate***
Concentration in Emission Stream (ppmv) ***$8.12x10^{-5}$***	Vapor Pressure (in. Hg @ °F) ***0 in Hg @ 77°F***
Solubility ***Insoluble in water***	Molecular Weight (lb/lb-mole)
Absorptive Properties -	

Pollutant Emitted ***Beryllium***	Chemical Abstract Services (CAS) Number ***7440-41-7***
Proposed Emission Rate (lb/hr) ***$1.79x10^{-6}$***	Emission Source (describe) ***Process Point***
Source Classification (process point, process fugitive, area fugitive) ***Process Point***	Pollutant Class and Form (organic/inorganic - particulate/vapor) ***Inorganic/Particulate***
Concentration in Emission Stream (ppmv) ***$4.39x10^{-4}$***	Vapor Pressure (in. Hg @ °F) ***0 in Hg @ 77°F***
Solubility ***Insoluble in water***	Molecular Weight (lb/lb-mole) ***9.01***
Absorptive Properties -	

Pollutant Emitted ***Cadmium***	Chemical Abstract Services (CAS) Number ***7440-43-9***
Proposed Emission Rate (lb/hr) ***$1.51x10^{-5}$***	Emission Source (describe) ***Process Point***
Source Classification (process point, process fugitive, area fugitive) ***Process Point***	Pollutant Class and Form (organic/inorganic - particulate/vapor) ***Inorganic/Particulate***
Concentration in Emission Stream (ppmv) ***$2.98x10^{-4}$***	Vapor Pressure (in. Hg @ °F) ***0 in Hg@ 77°F***
Solubility ***Insoluble in water***	Molecular Weight (lb/lb-mole)
Absorptive Properties -	

Pollutant Emitted ***Chromium (hexavalent)***	Chemical Abstract Services (CAS) Number ***1333-82-0***
Proposed Emission Rate (lb/hr) ***$3.85x10^{-6}$***	Emission Source (describe) ***Process Point***
Source Classification (process point, process fugitive, area fugitive) ***Process Point***	Pollutant Class and Form (organic/inorganic - particulate/vapor) ***Inorganic/Particulate***
Concentration in Emission Stream (ppmv) ***$1.64x10^{-4}$***	Vapor Pressure (in. Hg @ °F) ***0 in Hg @77°F***
Solubility ***1,660 g/L in water @ 77°F***	Molecular Weight (lb/lb-mole) ***51.99***
Absorptive Properties -	

Pollutant Emitted ***Chromium***	Chemical Abstract Services (CAS) Number ***7440-47-3***
Proposed Emission Rate (lb/hr) ***$1.93x10^{-5}$***	Emission Source (describe) ***Process Point***
Source Classification (process point, process fugitive, area fugitive) ***Process Point***	Pollutant Class and Form (organic/inorganic - particulate/vapor) ***Inorganic/Particulate***
Concentration in Emission Stream (ppmv) ***$8.19x10^{-4}$***	Vapor Pressure (in. Hg @ °F) ***0 in Hg @ 77°F***
Solubility ***Insoluble in water***	Molecular Weight (lb/lb-mole) ***51.99***
Absorptive Properties -	

Pollutant Emitted ***Cobalt***	Chemical Abstract Services (CAS) Number ***7440-48-4***
Proposed Emission Rate (lb/hr) ***$1.13x10^{-6}$***	Emission Source (describe) ***Process Point***
Source Classification (process point, process fugitive, area fugitive) ***Process Point***	Pollutant Class and Form (organic/inorganic - particulate/vapor) ***Inorganic/Particulate***
Concentration in Emission Stream (ppmv) ***$4.23x10^{-5}$***	Vapor Pressure (in. Hg @ °F) ***0 in Hg @ 77°F***
Solubility ***Insoluble in water***	Molecular Weight (lb/lb-mole) ***58.93***
Absorptive Properties -	

Pollutant Emitted ***Manganese***	Chemical Abstract Services (CAS) Number
Proposed Emission Rate (lb/hr) ***$5.09x10^{-6}$***	Emission Source (describe) ***Process Point***
Source Classification (process point, process fugitive, area fugitive) ***Process Point***	Pollutant Class and Form (organic/inorganic - particulate/vapor) ***Inorganic/Particulate***
Concentration in Emission Stream (ppmv) ***$2.05x10^{-4}$***	Vapor Pressure (in. Hg @ °F) ***0 in Hg @ 77 °F***
Solubility ***Insoluble in water***	Molecular Weight (lb/lb-mole) ***54.94***
Absorptive Properties -	

Pollutant Emitted ***Mercury***	Chemical Abstract Services (CAS) Number ***7439-97-6***
Proposed Emission Rate (lb/hr) ***$3.44x10^{-6}$***	Emission Source (describe) ***Process Point***
Source Classification (process point, process fugitive, area fugitive) ***Process Point***	Pollutant Class and Form (organic/inorganic - particulate/vapor) ***Inorganic/Particulate***
Concentration in Emission Stream (ppmv) ***$3.79x10^{-5}$***	Vapor Pressure (in. Hg @ °F) ***$7.85x10^{-5}$ in Hg @ 77 °F***
Solubility ***Insoluble in water***	Molecular Weight (lb/lb-mole) ***200.59***
Absorptive Properties -	

Pollutant Emitted ***Nickel***	Chemical Abstract Services (CAS) Number ***7044-02-0***
Proposed Emission Rate (lb/hr) ***$2.89x10^{-5}$***	Emission Source (describe) ***Process Point***
Source Classification (process point, process fugitive, area fugitive) ***Process Point***	Pollutant Class and Form (organic/inorganic - particulate/vapor) ***Inorganic/Particulate***
Concentration in Emission Stream (ppmv) ***$1.09x10^{-3}$***	Vapor Pressure (in. Hg @ °F) ***0 in Hg Q 77°F***
Solubility ***Insoluble in water***	Molecular Weight (lb/lb-mole) ***58.69***
Absorptive Properties -	

Pollutant Emitted ***Selenium***	Chemical Abstract Services (CAS) Number ***7782-49-2***
Proposed Emission Rate (lb/hr) ***$1.21x10^{-5}$***	Emission Source (describe) ***Process Point***
Source Classification (process point, process fugitive, area fugitive) ***Process Point***	Pollutant Class and Form (organic/inorganic - particulate/vapor) ***Inorganic/Particulate***
Concentration in Emission Stream (ppmv) ***$3.39x10^{-4}$***	Vapor Pressure (in. Hg @ °F) ***0.29 in Hg @ 807***
Solubility ***Insoluble in water***	Molecular Weight (lb/lb-mole) ***78.96***
Absorptive Properties -	

Signature of Applicant	Date 09/26/2016

SEND COMPLETED APPLICATION AND ALL ATTACHMENTS TO:

North Dakota Department of
Health Division of Air Quality
918 E Divide Ave., 2nd Floor
Bismarck, ND 58501-1947
(701) 328-5188

PERMIT APPLICATION FOR
HAZARDOUS AIR POLLUTANT (HAP) SOURCES

NORTH DAKOTA DEPARTMENT OF HEALTH
DIVISION OF AIR QUALITY
SFN 8329 (09-12)

SECTION A1 - APPLICANT INFORMATION

Name of Firm or Organization ***Meridian Energy Group - Davis Refinery***		
Applicant's Name ***Tom Williams***		
Title ***VP of Planning &Permitting***	Telephone Number ***(707) 299-0182***	E-mail Address ***twilliams@meridianenergygroup.inc***
Mailing Address (Street & No.) ***2062 Business Center Drive, Suite 115***		
City ***Irvine***	State ***CA***	ZIP Code ***92612***

SECTION A2 - FACILITY INFORMATION

Contact Person for Air Pollution Matters ***Tom Johnson***		
Title ***Vice President of Operations***	Telephone Number ***(409)795-0792***	E-mail Address ***tjohnson@meridianenergygroup.inc***
Facility Address (Street & No. or Lat/Long to Nearest Second) ***37th Street / 46°52'45"N/103°14'55" W***		
City ***Belfield***	State ***ND***	ZIP Code ***58622***
County ***Billings***	Number of Employees at Location ***TBD***	
Land Area at Plant Site ***261*** Acres (or) Sq. Ft.	MSL Elevation at Plant ***2,685 feet***	

Describe Nature of Business/Process

Petroleum Refining / Heavy Naphtha Hydrotreater / Heater

SECTION B – STACK DATA

Inside Diameter (ft) ***3.0***	Height Above Grade (ft) ***91.0***	
Gas Temperature at Exit (°F) ***787.7***	Gas Velocity at Exit (ft/sec) ***19.1***	Gas Volume (scfm) ***8,115.32***
Basis of any Estimates (attach separate sheet if necessary) ***Engineering data and Emission factors from Table 1.4-2. AP 42, Chapter 1: External Combustion Sources. See Document P-5715043-01-001-18042-I001 "EMISSIONS INVENTORY" and P-5715043-01-001-18035-I001 "BACT Analysis"***		
Are Emission Control Devices in Place? If YES – Complete SFN 8532		Yes ☐ No ☒
Nearest Residences or Building ***Utility building***	Distance (ft) ***580 ft***	Direction ***South***
Nearest Property Line ***Fenceline***	Distance (ft) ***843 ft***	Direction ***Southeast***

SECTION C – EMISSION STREAM DATA

Source ID No. From SFN 8516 ***105-H-0502***	Mean Particle Diameter (μm) ***TBD***
Flow Rate (scfm) ***8,115.32***	Drift Velocity (ft/sec) ***19.1***
Stream Temperature (°F) ***787.7***	Particulate Concentration (gr/dscf) ***TBD***
Moisture Content (%) ***TBD***	Halogens or Metals Present? ***Metals***
Pressure (in. Hg) ***TBD***	Organic Content (ppmv) $3.71x10^{-1}$
Heat Content (Btu/scfm) ***TBD***	O_2 Content (%) ***N/A***

SECTION D – POLLUTANT SPECIFIC DATA
(Complete One Box for Each Pollutant in Emission Stream)

Pollutant Emitted ***Acetaldehyde***	Chemical Abstract Services (CAS) Number ***75-07-0***
Proposed Emission Rate (lb/hr) $4.88x10^{-5}$	Emission Source (describe) ***Process Point***
Source Classification (process point, process fugitive, area fugitive) ***Process Point***	Pollutant Class and Form (organic/inorganic - particulate/vapor) ***Organic Vapor***
Concentration in Emission Stream (ppmv) $2.07x10^{-3}$	Vapor Pressure (in. Hg @ °F) ***35.51 in Hg @ 68°C***
Solubility $1x10^{+6}$ ***mg/L in water @ 77°F***	Molecular Weight (lb/lb-mole) ***44.05***
Absorptive Properties -	

Pollutant Emitted ***Benzene***	Chemical Abstract Services (CAS) Number ***71-43-2***
Proposed Emission Rate (lb/hr) $8.53x10^{-6}$	Emission Source (describe) ***Process Point***
Source Classification (process point, process fugitive, area fugitive) ***Process Point***	Pollutant Class and Form (organic/inorganic - particulate/vapor) ***Organic /Vapor***
Concentration in Emission Stream (ppmv) $2.04x10^{-4}$	Vapor Pressure (in. Hg @ °F) ***3.73 in Hg @ 77 °F***
Solubility ***In water*** $1.79x10^{3}$ ***mg/L @ 77 °F***	Molecular Weight (lb/lb-mole) ***78.11***
Absorptive Properties -	

Pollutant Emitted ***Dichlorobenzene***	Chemical Abstract Services (CAS) Number ***Varies***
Proposed Emission Rate (lb/hr) $4.88x10^{-6}$	Emission Source (describe) ***Process Point***
Source Classification (process point, process fugitive, area fugitive) ***Process Point***	Pollutant Class and Form (organic/inorganic - particulate/vapor) ***Organic /Vapor***
Concentration in Emission Stream (ppmv) $6.21x10^{-5}$	Vapor Pressure (in. Hg @ °F) ***Varies***
Solubility ***Varies***	Molecular Weight (lb/lb-mole) ***147.00***
Absorptive Properties -	

Pollutant Emitted ***Ethylbenzene***	Chemical Abstract Services (CAS) Number ***100-41-4***
Proposed Emission Rate (lb/hr) ***$6.50x10^{-5}$***	Emission Source (describe) ***Process Point***
Source Classification (process point, process fugitive, area fugitive) ***Process Point***	Pollutant Class and Form (organic/inorganic - particulate/vapor) ***Organic /Vapor***
Concentration in Emission Stream (ppmv) ***$1.15x10^{-3}$***	Vapor Pressure (in. Hg @ °F) ***0.37 in Hg @ 77°F***
Solubility ***In water 0.014 g/100mL @ 59 °F***	Molecular Weight (lb/lb-mole) ***106.17***
Absorptive Properties -	

Pollutant Emitted ***Formaldehyde***	Chemical Abstract Services (CAS) Number ***50-00-0***
Proposed Emission Rate (lb/hr) ***$3.01x10^{-4}$***	Emission Source (describe) ***Process Point***
Source Classification (process point, process fugitive, area fugitive) ***Process Point***	Pollutant Class and Form (organic/inorganic - particulate/vapor) ***Organic /Vapor***
Concentration in Emission Stream (ppmv) ***$1.87x10^{-2}$***	Vapor Pressure (in. Hg @ °F) ***0.15 in Hg @ 77 °F***
Solubility ***In water 4.00 $x10^{5}$ mg/L @ 68°F***	Molecular Weight (lb/lb-mole) ***30.03***
Absorptive Properties -	

Pollutant Emitted ***Hexane***	Chemical Abstract Services (CAS) Number ***110-54-5***
Proposed Emission Rate (lb/hr) ***$7.31x10^{-3}$***	Emission Source (describe) ***Process Point***
Source Classification (process point, process fugitive, area fugitive) ***Process Point***	Pollutant Class and Form (organic/inorganic - particulate/vapor) ***Organic /Vapor***
Concentration in Emission Stream (ppmv) ***$1.59x10^{-1}$***	Vapor Pressure (in. Hg @ °F) ***5.90 in Hg @ 68 °F***
Solubility ***Insoluble in water***	Molecular Weight (lb/lb-mole) ***86.1***
Absorptive Properties -	

Pollutant Emitted ***Naphthalene***	Chemical Abstract Services (CAS) Number ***91-20-3***
Proposed Emission Rate (lb/hr) ***$2.44x10^{-6}$***	Emission Source (describe) ***Process Point***
Source Classification (process point, process fugitive, area fugitive) ***Process Point***	Pollutant Class and Form (organic/inorganic - particulate/vapor) ***Organic /Vapor***
Concentration in Emission Stream (ppmv) ***$3.56x10^{-5}$***	Vapor Pressure (in. Hg @ °F) ***0.003 in Hg @ 77 °F***
Solubility ***In water 31 mg/L @ 77 °F***	Molecular Weight (lb/lb-mole) ***128.17***
Absorptive Properties -	

Pollutant Emitted ***Toluene***	Chemical Abstract Services (CAS) Number ***108-88-3***
Proposed Emission Rate (lb/hr) ***$1.34x10^{-5}$***	Emission Source (describe) ***Process Point***
Source Classification (process point, process fugitive, area fugitive) ***Process Point***	Pollutant Class and Form (organic/inorganic - particulate/vapor) ***Organic /Vapor***
Concentration in Emission Stream (ppmv) ***$2.72x10^{-4}$***	Vapor Pressure (in. Hg @ °F) ***1.12 in Hg @ 77°F***
Solubility ***In water 526 mg/L @ 77°F***	Molecular Weight (lb/lb-mole) ***92.14***
Absorptive Properties -	

Pollutant Emitted ***Xylene***	Chemical Abstract Services (CAS) Number ***95-47-6***
Proposed Emission Rate (lb/hr) ***$1.02x10^{-4}$***	Emission Source (describe) ***Process Point***
Source Classification (process point, process fugitive, area fugitive) ***Process Point***	Pollutant Class and Form (organic/inorganic - particulate/vapor) ***Organic /Vapor***
Concentration in Emission Stream (ppmv) ***$1.79x10^{-3}$***	Vapor Pressure (in. Hg @ °F) ***0.26 in Hg @ 77°F***
Solubility ***In water 178 mg/L @ 77°F***	Molecular Weight (lb/lb-mole) ***106.16***
Absorptive Properties -	

Pollutant Emitted ***PAH***	Chemical Abstract Services (CAS) Number ***N/A***
Proposed Emission Rate (lb/hr) ***$1.73x10^{-5}$***	Emission Source (describe) ***Process Point***
Source Classification (process point, process fugitive, area fugitive) ***Process Point***	Pollutant Class and Form (organic/inorganic - particulate/vapor) ***Organic /Vapor***
Concentration in Emission Stream (ppmv) ***$3.32x10^{-4}$***	Vapor Pressure (in. Hg @ °F) ***N/A***
Solubility ***N/A***	Molecular Weight (lb/lb-mole) ***TBD***
Absorptive Properties -	

Pollutant Emitted ***Antimony***	Chemical Abstract Services (CAS) Number ***7740-36-0***
Proposed Emission Rate (lb/hr) ***$8.45x10^{-6}$***	Emission Source (describe) ***Process Point***
Source Classification (process point, process fugitive, area fugitive) ***Process Point***	Pollutant Class and Form (organic/inorganic - particulate/vapor) ***Inorganic/particulate***
Concentration in Emission Stream (ppmv) ***$1.30x10^{-4}$***	Vapor Pressure (in. Hg @ °F) ***0 in Hg @ 77°F***
Solubility ***Insoluble in water***	Molecular Weight (lb/lb-mole) ***121.76***
Absorptive Properties -	

Pollutant Emitted ***Arsenic***	Chemical Abstract Services (CAS) Number ***7440-38-2***
Proposed Emission Rate (lb/hr) ***$3.25x10^{-6}$***	Emission Source (describe) ***Process Point***
Source Classification (process point, process fugitive, area fugitive) ***Process Point***	Pollutant Class and Form (organic/inorganic - particulate/vapor) ***Inorganic/Particulate***
Concentration in Emission Stream (ppmv) ***$8.12x10^{-5}$***	Vapor Pressure (in. Hg @ °F) ***0 in Hg @ 77°F***
Solubility ***Insoluble in water***	Molecular Weight (lb/lb-mole)
Absorptive Properties -	

Pollutant Emitted ***Beryllium***	Chemical Abstract Services (CAS) Number ***7440-41-7***
Proposed Emission Rate (lb/hr) ***$2.11x10^{-6}$***	Emission Source (describe) ***Process Point***
Source Classification (process point, process fugitive, area fugitive) ***Process Point***	Pollutant Class and Form (organic/inorganic - particulate/vapor) ***Inorganic/Particulate***
Concentration in Emission Stream (ppmv) ***$4.39x10^{-4}$***	Vapor Pressure (in. Hg @ °F) ***0 in Hg @ 77°F***
Solubility ***Insoluble in water***	Molecular Weight (lb/lb-mole) ***9.01***
Absorptive Properties -	

Pollutant Emitted ***Cadmium***	Chemical Abstract Services (CAS) Number ***7440-43-9***
Proposed Emission Rate (lb/hr) ***$1.79x10^{-5}$***	Emission Source (describe) ***Process Point***
Source Classification (process point, process fugitive, area fugitive) ***Process Point***	Pollutant Class and Form (organic/inorganic - particulate/vapor) ***Inorganic/Particulate***
Concentration in Emission Stream (ppmv) ***$2.98x10^{-4}$***	Vapor Pressure (in. Hg @ °F) ***0 in Hg@ 77°F***
Solubility ***Insoluble in water***	Molecular Weight (lb/lb-mole)
Absorptive Properties -	

Pollutant Emitted ***Chromium (hexavalent)***	Chemical Abstract Services (CAS) Number ***1333-82-0***
Proposed Emission Rate (lb/hr) ***$4.55x10^{-6}$***	Emission Source (describe) ***Process Point***
Source Classification (process point, process fugitive, area fugitive) ***Process Point***	Pollutant Class and Form (organic/inorganic - particulate/vapor) ***Inorganic/Particulate***
Concentration in Emission Stream (ppmv) ***$1.64x10^{-4}$***	Vapor Pressure (in. Hg @ °F) ***0 in Hg @77°F***
Solubility ***1,660 g/L in water @ 77°F***	Molecular Weight (lb/lb-mole) ***51.99***
Absorptive Properties -	

Pollutant Emitted ***Chromium***	Chemical Abstract Services (CAS) Number ***7440-47-3***
Proposed Emission Rate (lb/hr) ***$2.28x10^{-5}$***	Emission Source (describe) ***Process Point***
Source Classification (process point, process fugitive, area fugitive) ***Process Point***	Pollutant Class and Form (organic/inorganic - particulate/vapor) ***Inorganic/Particulate***
Concentration in Emission Stream (ppmv) ***$8.19x10^{-4}$***	Vapor Pressure (in. Hg @ °F) ***0 in Hg @ 77°F***
Solubility ***Insoluble in water***	Molecular Weight (lb/lb-mole) ***51.99***
Absorptive Properties -	

Pollutant Emitted ***Cobalt***	Chemical Abstract Services (CAS) Number ***7440-48-4***
Proposed Emission Rate (lb/hr) ***$1.33x10^{-6}$***	Emission Source (describe) ***Process Point***
Source Classification (process point, process fugitive, area fugitive) ***Process Point***	Pollutant Class and Form (organic/inorganic - particulate/vapor) ***Inorganic/Particulate***
Concentration in Emission Stream (ppmv) ***$4.23x10^{-5}$***	Vapor Pressure (in. Hg @ °F) ***0 in Hg @ 77°F***
Solubility ***Insoluble in water***	Molecular Weight (lb/lb-mole) ***58.93***
Absorptive Properties -	

Pollutant Emitted ***Manganese***	Chemical Abstract Services (CAS) Number
Proposed Emission Rate (lb/hr) ***$6.01x10^{-6}$***	Emission Source (describe) ***Process Point***
Source Classification (process point, process fugitive, area fugitive) ***Process Point***	Pollutant Class and Form (organic/inorganic - particulate/vapor) ***Inorganic/Particulate***
Concentration in Emission Stream (ppmv) ***$2.05x10^{-4}$***	Vapor Pressure (in. Hg @ °F) ***0 in Hg @ 77 °F***
Solubility ***Insoluble in water***	Molecular Weight (lb/lb-mole) ***54.94***
Absorptive Properties -	

Pollutant Emitted ***Mercury***	Chemical Abstract Services (CAS) Number ***7439-97-6***
Proposed Emission Rate (lb/hr) ***$4.06x10^{-6}$***	Emission Source (describe) ***Process Point***
Source Classification (process point, process fugitive, area fugitive) ***Process Point***	Pollutant Class and Form (organic/inorganic - particulate/vapor) ***Inorganic/Particulate***
Concentration in Emission Stream (ppmv) ***$3.79x10^{-5}$***	Vapor Pressure (in. Hg @ °F) ***$7.85x10^{-5}$ in Hg @ 77 °F***
Solubility ***Insoluble in water***	Molecular Weight (lb/lb-mole) ***200.59***
Absorptive Properties -	

Pollutant Emitted ***Nickel***	Chemical Abstract Services (CAS) Number ***7044-02-0***
Proposed Emission Rate (lb/hr) ***$3.41x10^{-5}$***	Emission Source (describe) ***Process Point***
Source Classification (process point, process fugitive, area fugitive) ***Process Point***	Pollutant Class and Form (organic/inorganic - particulate/vapor) ***Inorganic/Particulate***
Concentration in Emission Stream (ppmv) ***$1.09x10^{-3}$***	Vapor Pressure (in. Hg @ °F) ***0 in Hg Q 77°F***
Solubility ***Insoluble in water***	Molecular Weight (lb/lb-mole) ***58.69***
Absorptive Properties -	

Pollutant Emitted ***Selenium***	Chemical Abstract Services (CAS) Number ***7782-49-2***
Proposed Emission Rate (lb/hr) ***$1.43x10^{-5}$***	Emission Source (describe) ***Process Point***
Source Classification (process point, process fugitive, area fugitive) ***Process Point***	Pollutant Class and Form (organic/inorganic - particulate/vapor) ***Inorganic/Particulate***
Concentration in Emission Stream (ppmv) ***$3.39x10^{-4}$***	Vapor Pressure (in. Hg @ °F) ***0.29 in Hg @ 807***
Solubility ***Insoluble in water***	Molecular Weight (lb/lb-mole) ***78.96***
Absorptive Properties -	

Signature of Applicant	Date 09/26/2016

SEND COMPLETED APPLICATION AND ALL ATTACHMENTS TO:

North Dakota Department of
Health Division of Air Quality
918 E Divide Ave., 2nd Floor
Bismarck, ND 58501-1947
(701) 328-5188

PERMIT APPLICATION FOR
HAZARDOUS AIR POLLUTANT (HAP) SOURCES

NORTH DAKOTA DEPARTMENT OF HEALTH
DIVISION OF AIR QUALITY
SFN 8329 (09-12)

SECTION A1 - APPLICANT INFORMATION

Name of Firm or Organization ***Meridian Energy Group - Davis Refinery***		
Applicant's Name ***Tom Williams***		
Title ***VP of Planning &Permitting***	Telephone Number ***(707) 299-0182***	E-mail Address ***twilliams@meridianenergygroup.inc***
Mailing Address (Street & No.) ***2062 Business Center Drive, Suite 115***		
City ***Irvine***	State ***CA***	ZIP Code ***92612***

SECTION A2 - FACILITY INFORMATION

Contact Person for Air Pollution Matters ***Tom Johnson***		
Title ***Vice President of Operations***	Telephone Number ***(409)795-0792***	E-mail Address ***tjohnson@meridianenergygroup.inc***
Facility Address (Street & No. or Lat/Long to Nearest Second) ***37th Street / 46°52'45"N/103°14'55" W***		
City ***Belfield***	State ***ND***	ZIP Code ***58622***
County ***Billings***	Number of Employees at Location ***TBD***	
Land Area at Plant Site ***261*** Acres (or) Sq. Ft.	MSL Elevation at Plant ***2,685 feet***	

Describe Nature of Business/Process ***Petroleum Refining / Catalytic Reformer Unit #2 heater***

SECTION B – STACK DATA

Inside Diameter (ft) ***4.0***	Height Above Grade (ft) ***42.0***	
Gas Temperature at Exit (°F) ***786.2***	Gas Velocity at Exit (ft/sec) ***27.5***	Gas Volume (scfm) ***20,769.92***
Basis of any Estimates (attach separate sheet if necessary) ***Engineering data and Emission factors from Table 1.4-2. AP 42, Chapter 1: External Combustion Sources. See Document P-5715043-01-001-18042-I001 "EMISSIONS INVENTORY" and P-5715043-01-001-18035-I001 "BACT Analysis"***		
Are Emission Control Devices in Place? If YES – Complete SFN 8532		Yes ☒ No ☐
Nearest Residences or Building ***Utility building***	Distance (ft) ***228 ft***	Direction ***South***
Nearest Property Line ***Fenceline***	Distance (ft) ***657 ft***	Direction ***Southeast***

SECTION C – EMISSION STREAM DATA

Source ID No. From SFN 8516 ***106-H-0601***	Mean Particle Diameter (μm) ***TBD***
Flow Rate (scfm) ***20,769.92***	Drift Velocity (ft/sec) ***27.5***
Stream Temperature (°F) ***786.2***	Particulate Concentration (gr/dscf) ***TBD***
Moisture Content (%) ***TBD***	Halogens or Metals Present? ***Metals***
Pressure (in. Hg) ***TBD***	Organic Content (ppmv) $1.86x10^{-1}$
Heat Content (Btu/scfm) ***TBD***	O_2 Content (%) ***N/A***

SECTION D – POLLUTANT SPECIFIC DATA
(Complete One Box for Each Pollutant in Emission Stream)

Pollutant Emitted ***Acetaldehyde***	Chemical Abstract Services (CAS) Number ***75-07-0***
Proposed Emission Rate (lb/hr) $1.25x10^{-4}$	Emission Source (describe) ***Process Point***
Source Classification (process point, process fugitive, area fugitive) ***Process Point***	Pollutant Class and Form (organic/inorganic - particulate/vapor) ***Organic Vapor***
Concentration in Emission Stream (ppmv) $2.08x10^{-3}$	Vapor Pressure (in. Hg @ °F) ***35.51 in Hg @ 68°C***
Solubility $1x10^{+6}$ ***mg/L in water @ 77°F***	Molecular Weight (lb/lb-mole) ***44.05***
Absorptive Properties -	

Pollutant Emitted ***Benzene***	Chemical Abstract Services (CAS) Number ***71-43-2***
Proposed Emission Rate (lb/hr) $2.19x10^{-5}$	Emission Source (describe) ***Process Point***
Source Classification (process point, process fugitive, area fugitive) ***Process Point***	Pollutant Class and Form (organic/inorganic - particulate/vapor) ***Organic /Vapor***
Concentration in Emission Stream (ppmv) $2.05x10^{-4}$	Vapor Pressure (in. Hg @ °F) ***3.73 in Hg @ 77 °F***
Solubility ***In water*** $1.79x10^{3}$ ***mg/L @ 77 °F***	Molecular Weight (lb/lb-mole) ***78.11***
Absorptive Properties -	

Pollutant Emitted ***Dichlorobenzene***	Chemical Abstract Services (CAS) Number ***Varies***
Proposed Emission Rate (lb/hr) $1.25x10^{-5}$	Emission Source (describe) ***Process Point***
Source Classification (process point, process fugitive, area fugitive) ***Process Point***	Pollutant Class and Form (organic/inorganic - particulate/vapor) ***Organic /Vapor***
Concentration in Emission Stream (ppmv) $6.22x10^{-5}$	Vapor Pressure (in. Hg @ °F) ***Varies***
Solubility ***Varies***	Molecular Weight (lb/lb-mole) ***147.00***
Absorptive Properties -	

Pollutant Emitted ***Ethylbenzene***	Chemical Abstract Services (CAS) Number ***100-41-4***
Proposed Emission Rate (lb/hr) ***$1.67x10^{-4}$***	Emission Source (describe) ***Process Point***
Source Classification (process point, process fugitive, area fugitive) ***Process Point***	Pollutant Class and Form (organic/inorganic - particulate/vapor) ***Organic /Vapor***
Concentration in Emission Stream (ppmv) ***$1.15x10^{-3}$***	Vapor Pressure (in. Hg @ °F) ***0.37 in Hg @ 77°F***
Solubility ***In water 0.014 g/100mL @ 59 °F***	Molecular Weight (lb/lb-mole) ***106.17***
Absorptive Properties -	

Pollutant Emitted ***Formaldehyde***	Chemical Abstract Services (CAS) Number ***50-00-0***
Proposed Emission Rate (lb/hr) ***$7.72x10^{-4}$***	Emission Source (describe) ***Process Point***
Source Classification (process point, process fugitive, area fugitive) ***Process Point***	Pollutant Class and Form (organic/inorganic - particulate/vapor) ***Organic /Vapor***
Concentration in Emission Stream (ppmv) ***$1.88x10^{-2}$***	Vapor Pressure (in. Hg @ °F) ***0.15 in Hg @ 77 °F***
Solubility ***In water 4.00 $x10^{5}$ mg/L @ 68°F***	Molecular Weight (lb/lb-mole) ***30.03***
Absorptive Properties -	

Pollutant Emitted ***Hexane***	Chemical Abstract Services (CAS) Number ***110-54-5***
Proposed Emission Rate (lb/hr) ***$1.88x10^{-2}$***	Emission Source (describe) ***Process Point***
Source Classification (process point, process fugitive, area fugitive) ***Process Point***	Pollutant Class and Form (organic/inorganic - particulate/vapor) ***Organic /Vapor***
Concentration in Emission Stream (ppmv) ***$1.59x10^{-1}$***	Vapor Pressure (in. Hg @ °F) ***5.90 in Hg @ 68 °F***
Solubility ***Insoluble in water***	Molecular Weight (lb/lb-mole) ***86.1***
Absorptive Properties -	

Pollutant Emitted ***Naphthalene***	Chemical Abstract Services (CAS) Number ***91-20-3***
Proposed Emission Rate (lb/hr) ***$6.26x10^{-6}$***	Emission Source (describe) ***Process Point***
Source Classification (process point, process fugitive, area fugitive) ***Process Point***	Pollutant Class and Form (organic/inorganic - particulate/vapor) ***Organic /Vapor***
Concentration in Emission Stream (ppmv) ***$3.57x10^{-5}$***	Vapor Pressure (in. Hg @ °F) ***0.003 in Hg @ 77 °F***
Solubility ***In water 31 mg/L @ 77 °F***	Molecular Weight (lb/lb-mole) ***128.17***
Absorptive Properties -	

Pollutant Emitted ***Toluene***	Chemical Abstract Services (CAS) Number ***108-88-3***
Proposed Emission Rate (lb/hr) ***3.44 x10^{-5}***	Emission Source (describe) ***Process Point***
Source Classification (process point, process fugitive, area fugitive) ***Process Point***	Pollutant Class and Form (organic/inorganic - particulate/vapor) ***Organic /Vapor***
Concentration in Emission Stream (ppmv) ***2.73x10^{-4}***	Vapor Pressure (in. Hg @ °F) ***1.12 in Hg @ 77°F***
Solubility ***In water 526 mg/L @ 77°F***	Molecular Weight (lb/lb-mole) ***92.14***
Absorptive Properties -	

Pollutant Emitted ***Xylene***	Chemical Abstract Services (CAS) Number ***95-47-6***
Proposed Emission Rate (lb/hr) ***2.61x10^{-4}***	Emission Source (describe) ***Process Point***
Source Classification (process point, process fugitive, area fugitive) ***Process Point***	Pollutant Class and Form (organic/inorganic - particulate/vapor) ***Organic /Vapor***
Concentration in Emission Stream (ppmv) ***1.80x10^{-3}***	Vapor Pressure (in. Hg @ °F) ***0.26 in Hg @ 77°F***
Solubility ***In water 178 mg/L @ 77°F***	Molecular Weight (lb/lb-mole) ***106.16***
Absorptive Properties -	

Pollutant Emitted ***PAH***	Chemical Abstract Services (CAS) Number ***N/A***
Proposed Emission Rate (lb/hr) ***4.44x10^{-5}***	Emission Source (describe) ***Process Point***
Source Classification (process point, process fugitive, area fugitive) ***Process Point***	Pollutant Class and Form (organic/inorganic - particulate/vapor) ***Organic /Vapor***
Concentration in Emission Stream (ppmv) ***3.33x10^{-4}***	Vapor Pressure (in. Hg @ °F) ***N/A***
Solubility ***N/A***	Molecular Weight (lb/lb-mole) ***TBD***
Absorptive Properties -	

Pollutant Emitted ***Antimony***	Chemical Abstract Services (CAS) Number ***7740-36-0***
Proposed Emission Rate (lb/hr) ***2.17x10^{-5}***	Emission Source (describe) ***Process Point***
Source Classification (process point, process fugitive, area fugitive) ***Process Point***	Pollutant Class and Form (organic/inorganic - particulate/vapor) ***Inorganic/particulate***
Concentration in Emission Stream (ppmv) ***1.30x10^{-4}***	Vapor Pressure (in. Hg @ °F) ***0 in Hg @ 77°F***
Solubility ***Insoluble in water***	Molecular Weight (lb/lb-mole) ***121.76***
Absorptive Properties -	

Pollutant Emitted ***Arsenic***	Chemical Abstract Services (CAS) Number ***7440-38-2***
Proposed Emission Rate (lb/hr) ***$8.35x10^{-6}$***	Emission Source (describe) ***Process Point***
Source Classification (process point, process fugitive, area fugitive) ***Process Point***	Pollutant Class and Form (organic/inorganic - particulate/vapor) ***Inorganic/Particulate***
Concentration in Emission Stream (ppmv) ***$8.14x10^{-5}$***	Vapor Pressure (in. Hg @ °F) ***0 in Hg @ 77°F***
Solubility ***Insoluble in water***	Molecular Weight (lb/lb-mole)
Absorptive Properties -	

Pollutant Emitted ***Beryllium***	Chemical Abstract Services (CAS) Number ***7440-41-7***
Proposed Emission Rate (lb/hr) ***$5.42x10^{-6}$***	Emission Source (describe) ***Process Point***
Source Classification (process point, process fugitive, area fugitive) ***Process Point***	Pollutant Class and Form (organic/inorganic - particulate/vapor) ***Inorganic/Particulate***
Concentration in Emission Stream (ppmv) ***$4.40x10^{-4}$***	Vapor Pressure (in. Hg @ °F) ***0 in Hg @ 77°F***
Solubility ***Insoluble in water***	Molecular Weight (lb/lb-mole) ***9.01***
Absorptive Properties -	

Pollutant Emitted ***Cadmium***	Chemical Abstract Services (CAS) Number ***7440-43-9***
Proposed Emission Rate (lb/hr) ***$4.59x10^{-5}$***	Emission Source (describe) ***Process Point***
Source Classification (process point, process fugitive, area fugitive) ***Process Point***	Pollutant Class and Form (organic/inorganic - particulate/vapor) ***Inorganic/Particulate***
Concentration in Emission Stream (ppmv) ***$2.98x10^{-4}$***	Vapor Pressure (in. Hg @ °F) ***0 in Hg@ 77°F***
Solubility ***Insoluble in water***	Molecular Weight (lb/lb-mole)
Absorptive Properties -	

Pollutant Emitted ***Chromium (hexavalent)***	Chemical Abstract Services (CAS) Number ***1333-82-0***
Proposed Emission Rate (lb/hr) ***$1.17x10^{-5}$***	Emission Source (describe) ***Process Point***
Source Classification (process point, process fugitive, area fugitive) ***Process Point***	Pollutant Class and Form (organic/inorganic - particulate/vapor) ***Inorganic/Particulate***
Concentration in Emission Stream (ppmv) ***$1.64x10^{-4}$***	Vapor Pressure (in. Hg @ °F) ***0 in Hg @77°F***
Solubility ***1,660 g/L in water @ 77°F***	Molecular Weight (lb/lb-mole) ***51.99***
Absorptive Properties -	

Pollutant Emitted ***Chromium***	Chemical Abstract Services (CAS) Number ***7440-47-3***
Proposed Emission Rate (lb/hr) ***$5.84x10^{-5}$***	Emission Source (describe) ***Process Point***
Source Classification (process point, process fugitive, area fugitive) ***Process Point***	Pollutant Class and Form (organic/inorganic - particulate/vapor) ***Inorganic/Particulate***
Concentration in Emission Stream (ppmv) ***$8.21x10^{-4}$***	Vapor Pressure (in. Hg @ °F) ***0 in Hg @ 77°F***
Solubility ***Insoluble in water***	Molecular Weight (lb/lb-mole) ***51.99***
Absorptive Properties -	

Pollutant Emitted ***Cobalt***	Chemical Abstract Services (CAS) Number ***7440-48-4***
Proposed Emission Rate (lb/hr) ***$3.42x10^{-6}$***	Emission Source (describe) ***Process Point***
Source Classification (process point, process fugitive, area fugitive) ***Process Point***	Pollutant Class and Form (organic/inorganic - particulate/vapor) ***Inorganic/Particulate***
Concentration in Emission Stream (ppmv) ***$4.24x10^{-5}$***	Vapor Pressure (in. Hg @ °F) ***0 in Hg @ 77°F***
Solubility ***Insoluble in water***	Molecular Weight (lb/lb-mole) ***58.93***
Absorptive Properties -	

Pollutant Emitted ***Manganese***	Chemical Abstract Services (CAS) Number
Proposed Emission Rate (lb/hr) ***$1.54x10^{-5}$***	Emission Source (describe) ***Process Point***
Source Classification (process point, process fugitive, area fugitive) ***Process Point***	Pollutant Class and Form (organic/inorganic - particulate/vapor) ***Inorganic/Particulate***
Concentration in Emission Stream (ppmv) ***$2.05x10^{-4}$***	Vapor Pressure (in. Hg @ °F) ***0 in Hg @ 77 °F***
Solubility ***Insoluble in water***	Molecular Weight (lb/lb-mole) ***54.94***
Absorptive Properties -	

Pollutant Emitted ***Mercury***	Chemical Abstract Services (CAS) Number ***7439-97-6***
Proposed Emission Rate (lb/hr) ***$1.04x10^{-5}$***	Emission Source (describe) ***Process Point***
Source Classification (process point, process fugitive, area fugitive) ***Process Point***	Pollutant Class and Form (organic/inorganic - particulate/vapor) ***Inorganic/Particulate***
Concentration in Emission Stream (ppmv) ***$3.80x10^{-5}$***	Vapor Pressure (in. Hg @ °F) ***$7.85x10^{-5}$ in Hg @ 77 °F***
Solubility ***Insoluble in water***	Molecular Weight (lb/lb-mole) ***200.59***
Absorptive Properties -	

Pollutant Emitted ***Nickel***	Chemical Abstract Services (CAS) Number ***7044-02-0***
Proposed Emission Rate (lb/hr) ***$8.76x10^{-5}$***	Emission Source (describe) ***Process Point***
Source Classification (process point, process fugitive, area fugitive) ***Process Point***	Pollutant Class and Form (organic/inorganic - particulate/vapor) ***Inorganic/Particulate***
Concentration in Emission Stream (ppmv) ***$1.09x10^{-3}$***	Vapor Pressure (in. Hg @ °F) ***0 in Hg Q 77°F***
Solubility ***Insoluble in water***	Molecular Weight (lb/lb-mole) ***58.69***
Absorptive Properties -	

Pollutant Emitted ***Selenium***	Chemical Abstract Services (CAS) Number ***7782-49-2***
Proposed Emission Rate (lb/hr) ***$3.67x10^{-5}$***	Emission Source (describe) ***Process Point***
Source Classification (process point, process fugitive, area fugitive) ***Process Point***	Pollutant Class and Form (organic/inorganic - particulate/vapor) ***Inorganic/Particulate***
Concentration in Emission Stream (ppmv) ***$3.40x10^{-4}$***	Vapor Pressure (in. Hg @ °F) ***0.29 in Hg @ 807***
Solubility ***Insoluble in water***	Molecular Weight (lb/lb-mole) ***78.96***
Absorptive Properties -	

Signature of Applicant	Date 09/26/2016

SEND COMPLETED APPLICATION AND ALL ATTACHMENTS TO:

North Dakota Department of
Health Division of Air Quality
918 E Divide Ave., 2nd Floor
Bismarck, ND 58501-1947
(701) 328-5188

PERMIT APPLICATION FOR
HAZARDOUS AIR POLLUTANT (HAP) SOURCES

NORTH DAKOTA DEPARTMENT OF HEALTH
DIVISION OF AIR QUALITY
SFN 8329 (09-12)

SECTION A1 - APPLICANT INFORMATION

Name of Firm or Organization ***Meridian Energy Group - Davis Refinery***		
Applicant's Name ***Tom Williams***		
Title ***VP of Planning &Permitting***	Telephone Number ***(707) 299-0182***	E-mail Address ***twilliams@meridianenergygroup.inc***
Mailing Address (Street & No.) ***2062 Business Center Drive, Suite 115***		
City ***Irvine***	State ***CA***	ZIP Code ***92612***

SECTION A2 - FACILITY INFORMATION

Contact Person for Air Pollution Matters ***Tom Johnson***		
Title ***Vice President of Operations***	Telephone Number ***(409)795-0792***	E-mail Address ***tjohnson@meridianenergygroup.inc***
Facility Address (Street & No. or Lat/Long to Nearest Second) ***37th Street / 46°52'45"N/103°14'55" W***		
City ***Belfield***	State ***ND***	ZIP Code ***58622***
County ***Billings***	Number of Employees at Location ***TBD***	
Land Area at Plant Site ***261*** Acres (or) Sq. Ft.	MSL Elevation at Plant ***2,685 feet***	

Describe Nature of Business/Process

Petroleum Refining / Catalytic Reformer Unit #1 heater

SECTION B – STACK DATA

Inside Diameter (ft) ***6.0***	Height Above Grade (ft) ***120.0***	
Gas Temperature at Exit (°F) ***787.7***	Gas Velocity at Exit (ft/sec) ***27.2***	Gas Volume (scfm) ***46,194.82***
Basis of any Estimates (attach separate sheet if necessary) ***Engineering data and Emission factors from Table 1.4-2. AP 42, Chapter 1: External Combustion Sources. See Document P-5715043-01-001-18042-I001 "EMISSIONS INVENTORY" and P-5715043-01-001-18035-I001 "BACT Analysis"***		
Are Emission Control Devices in Place? If YES – Complete SFN 8532		Yes ☒ No ☐
Nearest Residences or Building ***Utility building***	Distance (ft) ***268.4 ft***	Direction ***South***
Nearest Property Line ***Fenceline***	Distance (ft) ***810 ft***	Direction ***Southeast***

SECTION C – EMISSION STREAM DATA

Source ID No. From SFN 8516 ***107-H-0701***	Mean Particle Diameter (μm) ***TBD***
Flow Rate (scfm) ***46,194.82***	Drift Velocity (ft/sec) ***27.2***
Stream Temperature (°F) ***787.7***	Particulate Concentration (gr/dscf) ***TBD***
Moisture Content (%) ***TBD***	Halogens or Metals Present? ***Metals***
Pressure (in. Hg) ***TBD***	Organic Content (ppmv) ***$1.86x10^{-1}$***
Heat Content (Btu/scfm) ***TBD***	O_2 Content (%) ***N/A***

SECTION D – POLLUTANT SPECIFIC DATA
(Complete One Box for Each Pollutant in Emission Stream)

Pollutant Emitted ***Acetaldehyde***	Chemical Abstract Services (CAS) Number ***75-07-0***
Proposed Emission Rate (lb/hr) ***$2.78x10^{-4}$***	Emission Source (describe) ***Process Point***
Source Classification (process point, process fugitive, area fugitive) ***Process Point***	Pollutant Class and Form (organic/inorganic - particulate/vapor) ***Organic Vapor***
Concentration in Emission Stream (ppmv) ***$2.07x10^{-3}$***	Vapor Pressure (in. Hg @ °F) ***35.51 in Hg @ 68°C***
Solubility ***$1x10^{+6}$ mg/L in water @ 77°F***	Molecular Weight (lb/lb-mole) ***44.05***
Absorptive Properties -	

Pollutant Emitted ***Benzene***	Chemical Abstract Services (CAS) Number ***71-43-2***
Proposed Emission Rate (lb/hr) ***$4.86x10^{-5}$***	Emission Source (describe) ***Process Point***
Source Classification (process point, process fugitive, area fugitive) ***Process Point***	Pollutant Class and Form (organic/inorganic - particulate/vapor) ***Organic /Vapor***
Concentration in Emission Stream (ppmv) ***$2.04x10^{-4}$***	Vapor Pressure (in. Hg @ °F) ***3.73 in Hg @ 77 °F***
Solubility ***In water $1.79x10^{3}$ mg/L @ 77 °F***	Molecular Weight (lb/lb-mole) ***78.11***
Absorptive Properties -	

Pollutant Emitted ***Dichlorobenzene***	Chemical Abstract Services (CAS) Number ***Varies***
Proposed Emission Rate (lb/hr) ***$2.78x10^{-5}$***	Emission Source (describe) ***Process Point***
Source Classification (process point, process fugitive, area fugitive) ***Process Point***	Pollutant Class and Form (organic/inorganic - particulate/vapor) ***Organic /Vapor***
Concentration in Emission Stream (ppmv) ***$6.21x10^{-5}$***	Vapor Pressure (in. Hg @ °F) ***Varies***
Solubility ***Varies***	Molecular Weight (lb/lb-mole) ***147.00***
Absorptive Properties -	

Pollutant Emitted ***Ethylbenzene***	Chemical Abstract Services (CAS) Number ***100-41-4***
Proposed Emission Rate (lb/hr) ***$3.70x10^{-4}$***	Emission Source (describe) ***Process Point***
Source Classification (process point, process fugitive, area fugitive) ***Process Point***	Pollutant Class and Form (organic/inorganic - particulate/vapor) ***Organic /Vapor***
Concentration in Emission Stream (ppmv) ***$1.15x10^{-3}$***	Vapor Pressure (in. Hg @ °F) ***0.37 in Hg @ 77°F***
Solubility ***In water 0.014 g/100mL @ 59 °F***	Molecular Weight (lb/lb-mole) ***106.17***
Absorptive Properties -	

Pollutant Emitted ***Formaldehyde***	Chemical Abstract Services (CAS) Number ***50-00-0***
Proposed Emission Rate (lb/hr) ***$1.71x10^{-3}$***	Emission Source (describe) ***Process Point***
Source Classification (process point, process fugitive, area fugitive) ***Process Point***	Pollutant Class and Form (organic/inorganic - particulate/vapor) ***Organic /Vapor***
Concentration in Emission Stream (ppmv) ***$1.87x10^{-2}$***	Vapor Pressure (in. Hg @ °F) ***0.15 in Hg @ 77 °F***
Solubility ***In water 4.00 $x10^{5}$ mg/L @ 68°F***	Molecular Weight (lb/lb-mole) ***30.03***
Absorptive Properties -	

Pollutant Emitted ***Hexane***	Chemical Abstract Services (CAS) Number ***110-54-5***
Proposed Emission Rate (lb/hr) ***$4.16x10^{-2}$***	Emission Source (describe) ***Process Point***
Source Classification (process point, process fugitive, area fugitive) ***Process Point***	Pollutant Class and Form (organic/inorganic - particulate/vapor) ***Organic /Vapor***
Concentration in Emission Stream (ppmv) ***$1.59x10^{-1}$***	Vapor Pressure (in. Hg @ °F) ***5.90 in Hg @ 68 °F***
Solubility ***Insoluble in water***	Molecular Weight (lb/lb-mole) ***86.1***
Absorptive Properties -	

Pollutant Emitted ***Naphthalene***	Chemical Abstract Services (CAS) Number ***91-20-3***
Proposed Emission Rate (lb/hr) ***$1.39x10^{-5}$***	Emission Source (describe) ***Process Point***
Source Classification (process point, process fugitive, area fugitive) ***Process Point***	Pollutant Class and Form (organic/inorganic - particulate/vapor) ***Organic /Vapor***
Concentration in Emission Stream (ppmv) ***$3.56x10^{-5}$***	Vapor Pressure (in. Hg @ °F) ***0.003 in Hg @ 77 °F***
Solubility ***In water 31 mg/L @ 77 °F***	Molecular Weight (lb/lb-mole) ***128.17***
Absorptive Properties -	

Pollutant Emitted ***Toluene***	Chemical Abstract Services (CAS) Number ***108-88-3***
Proposed Emission Rate (lb/hr) ***$7.63x10^{-5}$***	Emission Source (describe) ***Process Point***
Source Classification (process point, process fugitive, area fugitive) ***Process Point***	Pollutant Class and Form (organic/inorganic - particulate/vapor) ***Organic /Vapor***
Concentration in Emission Stream (ppmv) ***$2.72x10^{-4}$***	Vapor Pressure (in. Hg @ °F) ***1.12 in Hg @ 77°F***
Solubility ***In water 526 mg/L @ 77°F***	Molecular Weight (lb/lb-mole) ***92.14***
Absorptive Properties -	

Pollutant Emitted ***Xylene***	Chemical Abstract Services (CAS) Number ***95-47-6***
Proposed Emission Rate (lb/hr) ***$5.78x10^{-4}$***	Emission Source (describe) ***Process Point***
Source Classification (process point, process fugitive, area fugitive) ***Process Point***	Pollutant Class and Form (organic/inorganic - particulate/vapor) ***Organic /Vapor***
Concentration in Emission Stream (ppmv) ***$1.79x10^{-3}$***	Vapor Pressure (in. Hg @ °F) ***0.26 in Hg @ 77°F***
Solubility ***In water 178 mg/L @ 77°F***	Molecular Weight (lb/lb-mole) ***106.16***
Absorptive Properties -	

Pollutant Emitted ***PAH***	Chemical Abstract Services (CAS) Number ***N/A***
Proposed Emission Rate (lb/hr) ***$9.85x10^{-5}$***	Emission Source (describe) ***Process Point***
Source Classification (process point, process fugitive, area fugitive) ***Process Point***	Pollutant Class and Form (organic/inorganic - particulate/vapor) ***Organic /Vapor***
Concentration in Emission Stream (ppmv) ***$3.32x10^{-4}$***	Vapor Pressure (in. Hg @ °F) ***N/A***
Solubility ***N/A***	Molecular Weight (lb/lb-mole) ***TBD***
Absorptive Properties -	

Pollutant Emitted ***Antimony***	Chemical Abstract Services (CAS) Number ***7740-36-0***
Proposed Emission Rate (lb/hr) ***$4.81x10^{-5}$***	Emission Source (describe) ***Process Point***
Source Classification (process point, process fugitive, area fugitive) ***Process Point***	Pollutant Class and Form (organic/inorganic - particulate/vapor) ***Inorganic/particulate***
Concentration in Emission Stream (ppmv) ***$1.30x10^{-4}$***	Vapor Pressure (in. Hg @ °F) ***0 in Hg @ 77°F***
Solubility ***Insoluble in water***	Molecular Weight (lb/lb-mole) ***121.76***
Absorptive Properties -	

Pollutant Emitted ***Arsenic***	Chemical Abstract Services (CAS) Number ***7440-38-2***
Proposed Emission Rate (lb/hr) ***$1.85x10^{-5}$***	Emission Source (describe) ***Process Point***
Source Classification (process point, process fugitive, area fugitive) ***Process Point***	Pollutant Class and Form (organic/inorganic - particulate/vapor) ***Inorganic/Particulate***
Concentration in Emission Stream (ppmv) ***$8.12x10^{-5}$***	Vapor Pressure (in. Hg @ °F) ***0 in Hg @ 77°F***
Solubility ***Insoluble in water***	Molecular Weight (lb/lb-mole)
Absorptive Properties -	

Pollutant Emitted ***Beryllium***	Chemical Abstract Services (CAS) Number ***7440-41-7***
Proposed Emission Rate (lb/hr) ***$1.20x10^{-5}$***	Emission Source (describe) ***Process Point***
Source Classification (process point, process fugitive, area fugitive) ***Process Point***	Pollutant Class and Form (organic/inorganic - particulate/vapor) ***Inorganic/Particulate***
Concentration in Emission Stream (ppmv) ***$4.39x10^{-4}$***	Vapor Pressure (in. Hg @ °F) ***0 in Hg @ 77°F***
Solubility ***Insoluble in water***	Molecular Weight (lb/lb-mole) ***9.01***
Absorptive Properties -	

Pollutant Emitted ***Cadmium***	Chemical Abstract Services (CAS) Number ***7440-43-9***
Proposed Emission Rate (lb/hr) ***$1.02x10^{-4}$***	Emission Source (describe) ***Process Point***
Source Classification (process point, process fugitive, area fugitive) ***Process Point***	Pollutant Class and Form (organic/inorganic - particulate/vapor) ***Inorganic/Particulate***
Concentration in Emission Stream (ppmv) ***$2.98x10^{-4}$***	Vapor Pressure (in. Hg @ °F) ***0 in Hg@ 77°F***
Solubility ***Insoluble in water***	Molecular Weight (lb/lb-mole)
Absorptive Properties -	

Pollutant Emitted ***Chromium (hexavalent)***	Chemical Abstract Services (CAS) Number ***1333-82-0***
Proposed Emission Rate (lb/hr) ***$2.59x10^{-5}$***	Emission Source (describe) ***Process Point***
Source Classification (process point, process fugitive, area fugitive) ***Process Point***	Pollutant Class and Form (organic/inorganic - particulate/vapor) ***Inorganic/Particulate***
Concentration in Emission Stream (ppmv) ***$1.64x10^{-4}$***	Vapor Pressure (in. Hg @ °F) ***0 in Hg @77°F***
Solubility ***1,660 g/L in water @ 77°F***	Molecular Weight (lb/lb-mole) ***51.99***
Absorptive Properties -	

Pollutant Emitted ***Chromium***	Chemical Abstract Services (CAS) Number ***7440-47-3***
Proposed Emission Rate (lb/hr) ***$1.30x10^{-4}$***	Emission Source (describe) ***Process Point***
Source Classification (process point, process fugitive, area fugitive) ***Process Point***	Pollutant Class and Form (organic/inorganic - particulate/vapor) ***Inorganic/Particulate***
Concentration in Emission Stream (ppmv) ***$8.19x10^{-4}$***	Vapor Pressure (in. Hg @ °F) ***0 in Hg @ 77°F***
Solubility ***Insoluble in water***	Molecular Weight (lb/lb-mole) ***51.99***
Absorptive Properties -	

Pollutant Emitted ***Cobalt***	Chemical Abstract Services (CAS) Number ***7440-48-4***
Proposed Emission Rate (lb/hr) ***$7.59x10^{-6}$***	Emission Source (describe) ***Process Point***
Source Classification (process point, process fugitive, area fugitive) ***Process Point***	Pollutant Class and Form (organic/inorganic - particulate/vapor) ***Inorganic/Particulate***
Concentration in Emission Stream (ppmv) ***$4.23x10^{-5}$***	Vapor Pressure (in. Hg @ °F) ***0 in Hg @ 77°F***
Solubility ***Insoluble in water***	Molecular Weight (lb/lb-mole) ***58.93***
Absorptive Properties -	

Pollutant Emitted ***Manganese***	Chemical Abstract Services (CAS) Number
Proposed Emission Rate (lb/hr) ***$3.42x10^{-5}$***	Emission Source (describe) ***Process Point***
Source Classification (process point, process fugitive, area fugitive) ***Process Point***	Pollutant Class and Form (organic/inorganic - particulate/vapor) ***Inorganic/Particulate***
Concentration in Emission Stream (ppmv) ***$2.05x10^{-4}$***	Vapor Pressure (in. Hg @ °F) ***0 in Hg @ 77 °F***
Solubility ***Insoluble in water***	Molecular Weight (lb/lb-mole) ***54.94***
Absorptive Properties -	

Pollutant Emitted ***Mercury***	Chemical Abstract Services (CAS) Number ***7439-97-6***
Proposed Emission Rate (lb/hr) ***$2.31x10^{-5}$***	Emission Source (describe) ***Process Point***
Source Classification (process point, process fugitive, area fugitive) ***Process Point***	Pollutant Class and Form (organic/inorganic - particulate/vapor) ***Inorganic/Particulate***
Concentration in Emission Stream (ppmv) ***$3.79x10^{-5}$***	Vapor Pressure (in. Hg @ °F) ***$7.85x10^{-5}$ in Hg @ 77 °F***
Solubility ***Insoluble in water***	Molecular Weight (lb/lb-mole) ***200.59***
Absorptive Properties -	

Pollutant Emitted ***Nickel***	Chemical Abstract Services (CAS) Number ***7044-02-0***
Proposed Emission Rate (lb/hr) ***$1.94x10^{-4}$***	Emission Source (describe) ***Process Point***
Source Classification (process point, process fugitive, area fugitive) ***Process Point***	Pollutant Class and Form (organic/inorganic - particulate/vapor) ***Inorganic/Particulate***
Concentration in Emission Stream (ppmv) ***$1.09x10^{-3}$***	Vapor Pressure (in. Hg @ °F) ***0 in Hg Q 77°F***
Solubility ***Insoluble in water***	Molecular Weight (lb/lb-mole) ***58.69***
Absorptive Properties -	

Pollutant Emitted ***Selenium***	Chemical Abstract Services (CAS) Number ***7782-49-2***
Proposed Emission Rate (lb/hr) ***$8.14x10^{-5}$***	Emission Source (describe) ***Process Point***
Source Classification (process point, process fugitive, area fugitive) ***Process Point***	Pollutant Class and Form (organic/inorganic - particulate/vapor) ***Inorganic/Particulate***
Concentration in Emission Stream (ppmv) ***$3.39x10^{-4}$***	Vapor Pressure (in. Hg @ °F) ***0.29 in Hg @ 807***
Solubility ***Insoluble in water***	Molecular Weight (lb/lb-mole) ***78.96***
Absorptive Properties -	

Signature of Applicant	Date 09/26/2016

SEND COMPLETED APPLICATION AND ALL ATTACHMENTS TO:

North Dakota Department of
Health Division of Air Quality
918 E Divide Ave., 2nd Floor
Bismarck, ND 58501-1947
(701) 328-5188

PERMIT APPLICATION FOR
HAZARDOUS AIR POLLUTANT (HAP) SOURCES

NORTH DAKOTA DEPARTMENT OF HEALTH
DIVISION OF AIR QUALITY
SFN 8329 (09-12)

SECTION A1 - APPLICANT INFORMATION

Name of Firm or Organization ***Meridian Energy Group - Davis Refinery***		
Applicant's Name ***Tom Williams***		
Title ***VP of Planning &Permitting***	Telephone Number ***(707) 299-0182***	E-mail Address ***twilliams@meridianenergygroup.inc***
Mailing Address (Street & No.) ***2062 Business Center Drive, Suite 115***		
City ***Irvine***	State ***CA***	ZIP Code ***92612***

SECTION A2 - FACILITY INFORMATION

Contact Person for Air Pollution Matters ***Tom Johnson***		
Title ***Vice President of Operations***	Telephone Number ***(409)795-0792***	E-mail Address ***tjohnson@meridianenergygroup.inc***
Facility Address (Street & No. or Lat/Long to Nearest Second) ***37th Street / 46°52'45"N/103°14'55" W***		
City ***Belfield***	State ***ND***	ZIP Code ***58622***
County ***Billings***	Number of Employees at Location ***TBD***	
Land Area at Plant Site ***261*** Acres (or) Sq. Ft.	MSL Elevation at Plant ***2,685 feet***	

Describe Nature of Business/Process

Petroleum Refining / Diesel Hydrotreater / Reactor Charge Heater

SECTION B – STACK DATA

Inside Diameter (ft) ***2.5***	Height Above Grade (ft) ***96***	
Gas Temperature at Exit (°F) ***764.3***	Gas Velocity at Exit (ft/sec) ***28.4***	Gas Volume (scfm) ***8,091.77***
Basis of any Estimates (attach separate sheet if necessary) ***Engineering data and Emission factors from Table 1.4-2. AP 42, Chapter 1: External Combustion Sources. See Document P-5715043-01-001-18042-I001 "EMISSIONS INVENTORY" and P-5715043-01-001-18035-I001 "BACT Analysis"***		
Are Emission Control Devices in Place? If YES – Complete SFN 8532		Yes ☐ No ☒
Nearest Residences or Building ***Utility building***	Distance (ft) ***768 ft***	Direction ***South***
Nearest Property Line ***Fenceline***	Distance (ft) ***1048 ft***	Direction ***East***

SECTION C – EMISSION STREAM DATA

Source ID No. From SFN 8516 ***110-H-1001***	Mean Particle Diameter (μm) ***TBD***
Flow Rate (scfm) ***8,091.77***	Drift Velocity (ft/sec) ***28.4***
Stream Temperature (°F) ***764.3***	Particulate Concentration (gr/dscf) ***TBD***
Moisture Content (%) ***TBD***	Halogens or Metals Present? ***Metals***
Pressure (in. Hg) ***TBD***	Organic Content (ppmv) ***$1.83x10^{-1}$***
Heat Content (Btu/scfm) ***TBD***	O_2 Content (%) ***N/A***

SECTION D – POLLUTANT SPECIFIC DATA
(Complete One Box for Each Pollutant in Emission Stream)

Pollutant Emitted ***Acetaldehyde***	Chemical Abstract Services (CAS) Number ***75-07-0***
Proposed Emission Rate (lb/hr) ***$4.88x10^{-5}$***	Emission Source (describe) ***Process Point***
Source Classification (process point, process fugitive, area fugitive) ***Process Point***	Pollutant Class and Form (organic/inorganic - particulate/vapor) ***Organic Vapor***
Concentration in Emission Stream (ppmv) ***$2.04x10^{-3}$***	Vapor Pressure (in. Hg @ °F) ***35.51 in Hg @ 68°C***
Solubility ***$1x10^{+6}$ mg/L in water @ 77°F***	Molecular Weight (lb/lb-mole) ***44.05***
Absorptive Properties -	

Pollutant Emitted ***Benzene***	Chemical Abstract Services (CAS) Number ***71-43-2***
Proposed Emission Rate (lb/hr) ***$8.53x10^{-6}$***	Emission Source (describe) ***Process Point***
Source Classification (process point, process fugitive, area fugitive) ***Process Point***	Pollutant Class and Form (organic/inorganic - particulate/vapor) ***Organic /Vapor***
Concentration in Emission Stream (ppmv) ***$2.01x10^{-4}$***	Vapor Pressure (in. Hg @ °F) ***3.73 in Hg @ 77 °F***
Solubility ***In water $1.79x10^{3}$ mg/L @ 77 °F***	Molecular Weight (lb/lb-mole) ***78.11***
Absorptive Properties -	

Pollutant Emitted ***Dichlorobenzene***	Chemical Abstract Services (CAS) Number ***Varies***
Proposed Emission Rate (lb/hr) ***$4.88x10^{-6}$***	Emission Source (describe) ***Process Point***
Source Classification (process point, process fugitive, area fugitive) ***Process Point***	Pollutant Class and Form (organic/inorganic - particulate/vapor) ***Organic /Vapor***
Concentration in Emission Stream (ppmv) ***$6.11x10^{-5}$***	Vapor Pressure (in. Hg @ °F) ***Varies***
Solubility ***Varies***	Molecular Weight (lb/lb-mole) ***147.00***
Absorptive Properties -	

Pollutant Emitted ***Ethylbenzene***	Chemical Abstract Services (CAS) Number ***100-41-4***
Proposed Emission Rate (lb/hr) ***$6.50x10^{-5}$***	Emission Source (describe) ***Process Point***
Source Classification (process point, process fugitive, area fugitive) ***Process Point***	Pollutant Class and Form (organic/inorganic - particulate/vapor) ***Organic /Vapor***
Concentration in Emission Stream (ppmv) ***$1.13x10^{-3}$***	Vapor Pressure (in. Hg @ °F) ***0.37 in Hg @ 77°F***
Solubility ***In water 0.014 g/100mL @ 59 °F***	Molecular Weight (lb/lb-mole) ***106.17***
Absorptive Properties -	

Pollutant Emitted ***Formaldehyde***	Chemical Abstract Services (CAS) Number ***50-00-0***
Proposed Emission Rate (lb/hr) ***$3.01x10^{-4}$***	Emission Source (describe) ***Process Point***
Source Classification (process point, process fugitive, area fugitive) ***Process Point***	Pollutant Class and Form (organic/inorganic - particulate/vapor) ***Organic /Vapor***
Concentration in Emission Stream (ppmv) ***$1.84x10^{-2}$***	Vapor Pressure (in. Hg @ °F) ***0.15 in Hg @ 77 °F***
Solubility ***In water 4.00 $x10^{5}$ mg/L @ 68°F***	Molecular Weight (lb/lb-mole) ***30.03***
Absorptive Properties -	

Pollutant Emitted ***Hexane***	Chemical Abstract Services (CAS) Number ***110-54-5***
Proposed Emission Rate (lb/hr) ***$7.31x10^{-3}$***	Emission Source (describe) ***Process Point***
Source Classification (process point, process fugitive, area fugitive) ***Process Point***	Pollutant Class and Form (organic/inorganic - particulate/vapor) ***Organic /Vapor***
Concentration in Emission Stream (ppmv) ***$1.56x10^{-1}$***	Vapor Pressure (in. Hg @ °F) ***5.90 in Hg @ 68 °F***
Solubility ***Insoluble in water***	Molecular Weight (lb/lb-mole) ***86.1***
Absorptive Properties -	

Pollutant Emitted ***Naphthalene***	Chemical Abstract Services (CAS) Number ***91-20-3***
Proposed Emission Rate (lb/hr) ***$2.44x10^{-6}$***	Emission Source (describe) ***Process Point***
Source Classification (process point, process fugitive, area fugitive) ***Process Point***	Pollutant Class and Form (organic/inorganic - particulate/vapor) ***Organic /Vapor***
Concentration in Emission Stream (ppmv) ***$3.50x10^{-5}$***	Vapor Pressure (in. Hg @ °F) ***0.003 in Hg @ 77 °F***
Solubility ***In water 31 mg/L @ 77 °F***	Molecular Weight (lb/lb-mole) ***128.17***
Absorptive Properties -	

Pollutant Emitted ***Toluene***	Chemical Abstract Services (CAS) Number ***108-88-3***
Proposed Emission Rate (lb/hr) ***$1.34x10^{-5}$***	Emission Source (describe) ***Process Point***
Source Classification (process point, process fugitive, area fugitive) ***Process Point***	Pollutant Class and Form (organic/inorganic - particulate/vapor) ***Organic /Vapor***
Concentration in Emission Stream (ppmv) ***$2.68x10^{-4}$***	Vapor Pressure (in. Hg @ °F) ***1.12 in Hg @ 77°F***
Solubility ***In water 526 mg/L @ 77°F***	Molecular Weight (lb/lb-mole) ***92.14***
Absorptive Properties -	

Pollutant Emitted ***Xylene***	Chemical Abstract Services (CAS) Number ***95-47-6***
Proposed Emission Rate (lb/hr) ***$1.02x10^{-4}$***	Emission Source (describe) ***Process Point***
Source Classification (process point, process fugitive, area fugitive) ***Process Point***	Pollutant Class and Form (organic/inorganic - particulate/vapor) ***Organic /Vapor***
Concentration in Emission Stream (ppmv) ***$1.76x10^{-3}$***	Vapor Pressure (in. Hg @ °F) ***0.26 in Hg @ 77°F***
Solubility ***In water 178 mg/L @ 77°F***	Molecular Weight (lb/lb-mole) ***106.16***
Absorptive Properties -	

Pollutant Emitted ***PAH***	Chemical Abstract Services (CAS) Number ***N/A***
Proposed Emission Rate (lb/hr) ***$1.73x10^{-5}$***	Emission Source (describe) ***Process Point***
Source Classification (process point, process fugitive, area fugitive) ***Process Point***	Pollutant Class and Form (organic/inorganic - particulate/vapor) ***Organic /Vapor***
Concentration in Emission Stream (ppmv) ***$3.27x10^{-4}$***	Vapor Pressure (in. Hg @ °F) ***N/A***
Solubility ***N/A***	Molecular Weight (lb/lb-mole) ***TBD***
Absorptive Properties -	

Pollutant Emitted ***Antimony***	Chemical Abstract Services (CAS) Number ***7740-36-0***
Proposed Emission Rate (lb/hr) ***$8.45x10^{-6}$***	Emission Source (describe) ***Process Point***
Source Classification (process point, process fugitive, area fugitive) ***Process Point***	Pollutant Class and Form (organic/inorganic - particulate/vapor) ***Inorganic/particulate***
Concentration in Emission Stream (ppmv) ***$1.28x10^{-4}$***	Vapor Pressure (in. Hg @ °F) ***0 in Hg @ 77°F***
Solubility ***Insoluble in water***	Molecular Weight (lb/lb-mole) ***121.76***
Absorptive Properties -	

Pollutant Emitted ***Arsenic***	Chemical Abstract Services (CAS) Number ***7440-38-2***
Proposed Emission Rate (lb/hr) ***$3.25x10^{-6}$***	Emission Source (describe) ***Process Point***
Source Classification (process point, process fugitive, area fugitive) ***Process Point***	Pollutant Class and Form (organic/inorganic - particulate/vapor) ***Inorganic/Particulate***
Concentration in Emission Stream (ppmv) ***$7.99x10^{-5}$***	Vapor Pressure (in. Hg @ °F) ***0 in Hg @ 77°F***
Solubility ***Insoluble in water***	Molecular Weight (lb/lb-mole)
Absorptive Properties -	

Pollutant Emitted ***Beryllium***	Chemical Abstract Services (CAS) Number ***7440-41-7***
Proposed Emission Rate (lb/hr) ***$2.11x10^{-6}$***	Emission Source (describe) ***Process Point***
Source Classification (process point, process fugitive, area fugitive) ***Process Point***	Pollutant Class and Form (organic/inorganic - particulate/vapor) ***Inorganic/Particulate***
Concentration in Emission Stream (ppmv) ***$4.32x10^{-4}$***	Vapor Pressure (in. Hg @ °F) ***0 in Hg @ 77°F***
Solubility ***Insoluble in water***	Molecular Weight (lb/lb-mole) ***9.01***
Absorptive Properties -	

Pollutant Emitted ***Cadmium***	Chemical Abstract Services (CAS) Number ***7440-43-9***
Proposed Emission Rate (lb/hr) ***$1.79x10^{-5}$***	Emission Source (describe) ***Process Point***
Source Classification (process point, process fugitive, area fugitive) ***Process Point***	Pollutant Class and Form (organic/inorganic - particulate/vapor) ***Inorganic/Particulate***
Concentration in Emission Stream (ppmv) ***$2.93x10^{-4}$***	Vapor Pressure (in. Hg @ °F) ***0 in Hg@ 77°F***
Solubility ***Insoluble in water***	Molecular Weight (lb/lb-mole)
Absorptive Properties -	

Pollutant Emitted ***Chromium (hexavalent)***	Chemical Abstract Services (CAS) Number ***1333-82-0***
Proposed Emission Rate (lb/hr) ***$4.55x10^{-6}$***	Emission Source (describe) ***Process Point***
Source Classification (process point, process fugitive, area fugitive) ***Process Point***	Pollutant Class and Form (organic/inorganic - particulate/vapor) ***Inorganic/Particulate***
Concentration in Emission Stream (ppmv) ***$1.61x10^{-4}$***	Vapor Pressure (in. Hg @ °F) ***0 in Hg @77°F***
Solubility ***1,660 g/L in water @ 77°F***	Molecular Weight (lb/lb-mole) ***51.99***
Absorptive Properties -	

Pollutant Emitted ***Chromium***	Chemical Abstract Services (CAS) Number ***7440-47-3***
Proposed Emission Rate (lb/hr) ***$2.28x10^{-5}$***	Emission Source (describe) ***Process Point***
Source Classification (process point, process fugitive, area fugitive) ***Process Point***	Pollutant Class and Form (organic/inorganic - particulate/vapor) ***Inorganic/Particulate***
Concentration in Emission Stream (ppmv) ***$8.06x10^{-4}$***	Vapor Pressure (in. Hg @ °F) ***0 in Hg @ 77°F***
Solubility ***Insoluble in water***	Molecular Weight (lb/lb-mole) ***51.99***
Absorptive Properties -	

Pollutant Emitted ***Cobalt***	Chemical Abstract Services (CAS) Number ***7440-48-4***
Proposed Emission Rate (lb/hr) ***$1.33x10^{-6}$***	Emission Source (describe) ***Process Point***
Source Classification (process point, process fugitive, area fugitive) ***Process Point***	Pollutant Class and Form (organic/inorganic - particulate/vapor) ***Inorganic/Particulate***
Concentration in Emission Stream (ppmv) ***$4.17x10^{-5}$***	Vapor Pressure (in. Hg @ °F) ***0 in Hg @ 77°F***
Solubility ***Insoluble in water***	Molecular Weight (lb/lb-mole) ***58.93***
Absorptive Properties -	

Pollutant Emitted ***Manganese***	Chemical Abstract Services (CAS) Number
Proposed Emission Rate (lb/hr) ***$6.01x10^{-6}$***	Emission Source (describe) ***Process Point***
Source Classification (process point, process fugitive, area fugitive) ***Process Point***	Pollutant Class and Form (organic/inorganic - particulate/vapor) ***Inorganic/Particulate***
Concentration in Emission Stream (ppmv) ***$2.02x10^{-4}$***	Vapor Pressure (in. Hg @ °F) ***0 in Hg @ 77 °F***
Solubility ***Insoluble in water***	Molecular Weight (lb/lb-mole) ***54.94***
Absorptive Properties -	

Pollutant Emitted ***Mercury***	Chemical Abstract Services (CAS) Number ***7439-97-6***
Proposed Emission Rate (lb/hr) ***$4.06x10^{-6}$***	Emission Source (describe) ***Process Point***
Source Classification (process point, process fugitive, area fugitive) ***Process Point***	Pollutant Class and Form (organic/inorganic - particulate/vapor) ***Inorganic/Particulate***
Concentration in Emission Stream (ppmv) ***$3.73x10^{-5}$***	Vapor Pressure (in. Hg @ °F) ***$7.85x10^{-5}$ in Hg @ 77 °F***
Solubility ***Insoluble in water***	Molecular Weight (lb/lb-mole) ***200.59***
Absorptive Properties -	

Pollutant Emitted ***Nickel***	Chemical Abstract Services (CAS) Number ***7044-02-0***
Proposed Emission Rate (lb/hr) ***$3.41x10^{-5}$***	Emission Source (describe) ***Process Point***
Source Classification (process point, process fugitive, area fugitive) ***Process Point***	Pollutant Class and Form (organic/inorganic - particulate/vapor) ***Inorganic/Particulate***
Concentration in Emission Stream (ppmv) ***$1.07x10^{-3}$***	Vapor Pressure (in. Hg @ °F) ***0 in Hg Q 77°F***
Solubility ***Insoluble in water***	Molecular Weight (lb/lb-mole) ***58.69***
Absorptive Properties -	

Pollutant Emitted ***Selenium***	Chemical Abstract Services (CAS) Number ***7782-49-2***
Proposed Emission Rate (lb/hr) ***$1.43x10^{-5}$***	Emission Source (describe) ***Process Point***
Source Classification (process point, process fugitive, area fugitive) ***Process Point***	Pollutant Class and Form (organic/inorganic - particulate/vapor) ***Inorganic/Particulate***
Concentration in Emission Stream (ppmv) ***$3.34x10^{-4}$***	Vapor Pressure (in. Hg @ °F) ***0.29 in Hg @ 807***
Solubility ***Insoluble in water***	Molecular Weight (lb/lb-mole) ***78.96***
Absorptive Properties -	

Signature of Applicant	Date 09/26/2016

SEND COMPLETED APPLICATION AND ALL ATTACHMENTS TO:

North Dakota Department of
Health Division of Air Quality
918 E Divide Ave., 2nd Floor
Bismarck, ND 58501-1947
(701) 328-5188

PERMIT APPLICATION FOR
HAZARDOUS AIR POLLUTANT (HAP) SOURCES

NORTH DAKOTA DEPARTMENT OF HEALTH
DIVISION OF AIR QUALITY
SFN 8329 (09-12)

SECTION A1 - APPLICANT INFORMATION

Name of Firm or Organization ***Meridian Energy Group - Davis Refinery***		
Applicant's Name ***Tom Williams***		
Title ***VP of Planning &Permitting***	Telephone Number ***(707) 299-0182***	E-mail Address ***twilliams@meridianenergygroup.inc***
Mailing Address (Street & No.) ***2062 Business Center Drive, Suite 115***		
City ***Irvine***	State ***CA***	ZIP Code ***92612***

SECTION A2 - FACILITY INFORMATION

Contact Person for Air Pollution Matters ***Tom Johnson***		
Title ***Vice President of Operations***	Telephone Number ***(409)795-0792***	E-mail Address ***tjohnson@meridianenergygroup.inc***
Facility Address (Street & No. or Lat/Long to Nearest Second) ***37th Street / 46°52'45"N/103°14'55" W***		
City ***Belfield***	State ***ND***	ZIP Code ***58622***
County ***Billings***	Number of Employees at Location ***TBD***	
Land Area at Plant Site ***261*** Acres (or) Sq. Ft.	MSL Elevation at Plant ***2,685 feet***	

Describe Nature of Business/Process

Petroleum Refining / Light Naphtha Hydrotreater / Charge Heater

SECTION B – STACK DATA

Inside Diameter (ft) ***3.5***	Height Above Grade (ft) ***170***	
Gas Temperature at Exit (°F) ***793.1***	Gas Velocity at Exit (ft/sec) ***12.1***	Gas Volume (scfm) ***6,964.97***
Basis of any Estimates (attach separate sheet if necessary) ***Engineering data and Emission factors from Table 1.4-2. AP 42, Chapter 1: External Combustion Sources. See Document P-5715043-01-001-18042-I001 "EMISSIONS INVENTORY" and P-5715043-01-001-18035-I001 "BACT Analysis"***		
Are Emission Control Devices in Place? If YES – Complete SFN 8532		Yes ☐ No ☒
Nearest Residences or Building ***Utility building***	Distance (ft) ***591 ft***	Direction ***South***
Nearest Property Line ***Fenceline***	Distance (ft) ***765 ft***	Direction ***Southwest***

SECTION C – EMISSION STREAM DATA

Source ID No. From SFN 8516 ***111-H-1101***	Mean Particle Diameter (μm) ***TBD***
Flow Rate (scfm) ***6,964.97***	Drift Velocity (ft/sec) ***12.1***
Stream Temperature (°F) ***787.7***	Particulate Concentration (gr/dscf) ***TBD***
Moisture Content (%) ***TBD***	Halogens or Metals Present? ***Metals***
Pressure (in. Hg) ***TBD***	Organic Content (ppmv) ***$1.86x10^{-1}$***
Heat Content (Btu/scfm) ***TBD***	O_2 Content (%) ***N/A***

SECTION D – POLLUTANT SPECIFIC DATA
(Complete One Box for Each Pollutant in Emission Stream)

Pollutant Emitted ***Acetaldehyde***	Chemical Abstract Services (CAS) Number ***75-07-0***
Proposed Emission Rate (lb/hr) ***$4.17x10^{-5}$***	Emission Source (describe) ***Process Point***
Source Classification (process point, process fugitive, area fugitive) ***Process Point***	Pollutant Class and Form (organic/inorganic - particulate/vapor) ***Organic Vapor***
Concentration in Emission Stream (ppmv) ***$2.07x10^{-3}$***	Vapor Pressure (in. Hg @ °F) ***35.51 in Hg @ 68°C***
Solubility ***$1x10^{+6}$ mg/L in water @ 77°F***	Molecular Weight (lb/lb-mole) ***44.05***
Absorptive Properties -	

Pollutant Emitted ***Benzene***	Chemical Abstract Services (CAS) Number ***71-43-2***
Proposed Emission Rate (lb/hr) ***$7.30x10^{-6}$***	Emission Source (describe) ***Process Point***
Source Classification (process point, process fugitive, area fugitive) ***Process Point***	Pollutant Class and Form (organic/inorganic - particulate/vapor) ***Organic /Vapor***
Concentration in Emission Stream (ppmv) ***$2.05x10^{-4}$***	Vapor Pressure (in. Hg @ °F) ***3.73 in Hg @ 77 °F***
Solubility ***In water $1.79x10^{3}$ mg/L @ 77 °F***	Molecular Weight (lb/lb-mole) ***78.11***
Absorptive Properties -	

Pollutant Emitted ***Dichlorobenzene***	Chemical Abstract Services (CAS) Number ***Varies***
Proposed Emission Rate (lb/hr) ***$4.17x10^{-6}$***	Emission Source (describe) ***Process Point***
Source Classification (process point, process fugitive, area fugitive) ***Process Point***	Pollutant Class and Form (organic/inorganic - particulate/vapor) ***Organic /Vapor***
Concentration in Emission Stream (ppmv) ***$6.21x10^{-5}$***	Vapor Pressure (in. Hg @ °F) ***Varies***
Solubility ***Varies***	Molecular Weight (lb/lb-mole) ***147.00***
Absorptive Properties -	

Pollutant Emitted ***Ethylbenzene***	Chemical Abstract Services (CAS) Number ***100-41-4***
Proposed Emission Rate (lb/hr) ***$5.56x10^{-5}$***	Emission Source (describe) ***Process Point***
Source Classification (process point, process fugitive, area fugitive) ***Process Point***	Pollutant Class and Form (organic/inorganic - particulate/vapor) ***Organic /Vapor***
Concentration in Emission Stream (ppmv) ***$1.15x10^{-3}$***	Vapor Pressure (in. Hg @ °F) ***0.37 in Hg @ 77°F***
Solubility ***In water 0.014 g/100mL @ 59 °F***	Molecular Weight (lb/lb-mole) ***106.17***
Absorptive Properties -	

Pollutant Emitted ***Formaldehyde***	Chemical Abstract Services (CAS) Number ***50-00-0***
Proposed Emission Rate (lb/hr) ***$2.57x10^{-4}$***	Emission Source (describe) ***Process Point***
Source Classification (process point, process fugitive, area fugitive) ***Process Point***	Pollutant Class and Form (organic/inorganic - particulate/vapor) ***Organic /Vapor***
Concentration in Emission Stream (ppmv) ***$1.88x10^{-2}$***	Vapor Pressure (in. Hg @ °F) ***0.15 in Hg @ 77 °F***
Solubility ***In water 4.00 $x10^{5}$ mg/L @ 68°F***	Molecular Weight (lb/lb-mole) ***30.03***
Absorptive Properties -	

Pollutant Emitted ***Hexane***	Chemical Abstract Services (CAS) Number ***110-54-5***
Proposed Emission Rate (lb/hr) ***$6.26x10^{-3}$***	Emission Source (describe) ***Process Point***
Source Classification (process point, process fugitive, area fugitive) ***Process Point***	Pollutant Class and Form (organic/inorganic - particulate/vapor) ***Organic /Vapor***
Concentration in Emission Stream (ppmv) ***$1.59x10^{-1}$***	Vapor Pressure (in. Hg @ °F) ***5.90 in Hg @ 68 °F***
Solubility ***Insoluble in water***	Molecular Weight (lb/lb-mole) ***86.1***
Absorptive Properties -	

Pollutant Emitted ***Naphthalene***	Chemical Abstract Services (CAS) Number ***91-20-3***
Proposed Emission Rate (lb/hr) ***$2.09x10^{-6}$***	Emission Source (describe) ***Process Point***
Source Classification (process point, process fugitive, area fugitive) ***Process Point***	Pollutant Class and Form (organic/inorganic - particulate/vapor) ***Organic /Vapor***
Concentration in Emission Stream (ppmv) ***$3.56x10^{-5}$***	Vapor Pressure (in. Hg @ °F) ***0.003 in Hg @ 77 °F***
Solubility ***In water 31 mg/L @ 77 °F***	Molecular Weight (lb/lb-mole) ***128.17***
Absorptive Properties -	

Pollutant Emitted ***Toluene***	Chemical Abstract Services (CAS) Number ***108-88-3***
Proposed Emission Rate (lb/hr) ***1.15 x10^{-5}***	Emission Source (describe) ***Process Point***
Source Classification (process point, process fugitive, area fugitive) ***Process Point***	Pollutant Class and Form (organic/inorganic - particulate/vapor) ***Organic /Vapor***
Concentration in Emission Stream (ppmv) ***2.73x10^{-4}***	Vapor Pressure (in. Hg @ °F) ***1.12 in Hg @ 77°F***
Solubility ***In water 526 mg/L @ 77°F***	Molecular Weight (lb/lb-mole) ***92.14***
Absorptive Properties -	

Pollutant Emitted ***Xylene***	Chemical Abstract Services (CAS) Number ***95-47-6***
Proposed Emission Rate (lb/hr) ***8.69x10^{-5}***	Emission Source (describe) ***Process Point***
Source Classification (process point, process fugitive, area fugitive) ***Process Point***	Pollutant Class and Form (organic/inorganic - particulate/vapor) ***Organic /Vapor***
Concentration in Emission Stream (ppmv) ***1.79x10^{-3}***	Vapor Pressure (in. Hg @ °F) ***0.26 in Hg @ 77°F***
Solubility ***In water 178 mg/L @ 77°F***	Molecular Weight (lb/lb-mole) ***106.16***
Absorptive Properties -	

Pollutant Emitted ***PAH***	Chemical Abstract Services (CAS) Number ***N/A***
Proposed Emission Rate (lb/hr) ***1.48x10^{-5}***	Emission Source (describe) ***Process Point***
Source Classification (process point, process fugitive, area fugitive) ***Process Point***	Pollutant Class and Form (organic/inorganic - particulate/vapor) ***Organic /Vapor***
Concentration in Emission Stream (ppmv) ***3.32x10^{-4}***	Vapor Pressure (in. Hg @ °F) ***N/A***
Solubility ***N/A***	Molecular Weight (lb/lb-mole) ***TBD***
Absorptive Properties -	

Pollutant Emitted ***Antimony***	Chemical Abstract Services (CAS) Number ***7740-36-0***
Proposed Emission Rate (lb/hr) ***7.23x10^{-6}***	Emission Source (describe) ***Process Point***
Source Classification (process point, process fugitive, area fugitive) ***Process Point***	Pollutant Class and Form (organic/inorganic - particulate/vapor) ***Inorganic/particulate***
Concentration in Emission Stream (ppmv) ***1.30x10^{-4}***	Vapor Pressure (in. Hg @ °F) ***0 in Hg @ 77°F***
Solubility ***Insoluble in water***	Molecular Weight (lb/lb-mole) ***121.76***
Absorptive Properties -	

Pollutant Emitted ***Arsenic***	Chemical Abstract Services (CAS) Number ***7440-38-2***
Proposed Emission Rate (lb/hr) ***$2.78x10^{-6}$***	Emission Source (describe) ***Process Point***
Source Classification (process point, process fugitive, area fugitive) ***Process Point***	Pollutant Class and Form (organic/inorganic - particulate/vapor) ***Inorganic/Particulate***
Concentration in Emission Stream (ppmv) ***$8.13x10^{-5}$***	Vapor Pressure (in. Hg @ °F) ***0 in Hg @ 77°F***
Solubility ***Insoluble in water***	Molecular Weight (lb/lb-mole)
Absorptive Properties -	

Pollutant Emitted ***Beryllium***	Chemical Abstract Services (CAS) Number ***7440-41-7***
Proposed Emission Rate (lb/hr) ***$1.81x10^{-6}$***	Emission Source (describe) ***Process Point***
Source Classification (process point, process fugitive, area fugitive) ***Process Point***	Pollutant Class and Form (organic/inorganic - particulate/vapor) ***Inorganic/Particulate***
Concentration in Emission Stream (ppmv) ***$4.39x10^{-4}$***	Vapor Pressure (in. Hg @ °F) ***0 in Hg @ 77°F***
Solubility ***Insoluble in water***	Molecular Weight (lb/lb-mole) ***9.01***
Absorptive Properties -	

Pollutant Emitted ***Cadmium***	Chemical Abstract Services (CAS) Number ***7440-43-9***
Proposed Emission Rate (lb/hr) ***$1.53x10^{-5}$***	Emission Source (describe) ***Process Point***
Source Classification (process point, process fugitive, area fugitive) ***Process Point***	Pollutant Class and Form (organic/inorganic - particulate/vapor) ***Inorganic/Particulate***
Concentration in Emission Stream (ppmv) ***$2.98x10^{-4}$***	Vapor Pressure (in. Hg @ °F) ***0 in Hg@ 77°F***
Solubility ***Insoluble in water***	Molecular Weight (lb/lb-mole)
Absorptive Properties -	

Pollutant Emitted ***Chromium (hexavalent)***	Chemical Abstract Services (CAS) Number ***1333-82-0***
Proposed Emission Rate (lb/hr) ***$3.89x10^{-6}$***	Emission Source (describe) ***Process Point***
Source Classification (process point, process fugitive, area fugitive) ***Process Point***	Pollutant Class and Form (organic/inorganic - particulate/vapor) ***Inorganic/Particulate***
Concentration in Emission Stream (ppmv) ***$1.64x10^{-4}$***	Vapor Pressure (in. Hg @ °F) ***0 in Hg @77°F***
Solubility ***1,660 g/L in water @ 77°F***	Molecular Weight (lb/lb-mole) ***51.99***
Absorptive Properties -	

Pollutant Emitted ***Chromium***	Chemical Abstract Services (CAS) Number ***7440-47-3***
Proposed Emission Rate (lb/hr) ***$1.95x10^{-5}$***	Emission Source (describe) ***Process Point***
Source Classification (process point, process fugitive, area fugitive) ***Process Point***	Pollutant Class and Form (organic/inorganic - particulate/vapor) ***Inorganic/Particulate***
Concentration in Emission Stream (ppmv) ***$8.20x10^{-4}$***	Vapor Pressure (in. Hg @ °F) ***0 in Hg @ 77°F***
Solubility ***Insoluble in water***	Molecular Weight (lb/lb-mole) ***51.99***
Absorptive Properties -	

Pollutant Emitted ***Cobalt***	Chemical Abstract Services (CAS) Number ***7440-48-4***
Proposed Emission Rate (lb/hr) ***$1.14x10^{-6}$***	Emission Source (describe) ***Process Point***
Source Classification (process point, process fugitive, area fugitive) ***Process Point***	Pollutant Class and Form (organic/inorganic - particulate/vapor) ***Inorganic/Particulate***
Concentration in Emission Stream (ppmv) ***$4.24x10^{-5}$***	Vapor Pressure (in. Hg @ °F) ***0 in Hg @ 77°F***
Solubility ***Insoluble in water***	Molecular Weight (lb/lb-mole) ***58.93***
Absorptive Properties -	

Pollutant Emitted ***Manganese***	Chemical Abstract Services (CAS) Number
Proposed Emission Rate (lb/hr) ***$5.14x10^{-6}$***	Emission Source (describe) ***Process Point***
Source Classification (process point, process fugitive, area fugitive) ***Process Point***	Pollutant Class and Form (organic/inorganic - particulate/vapor) ***Inorganic/Particulate***
Concentration in Emission Stream (ppmv) ***$2.05x10^{-4}$***	Vapor Pressure (in. Hg @ °F) ***0 in Hg @ 77 °F***
Solubility ***Insoluble in water***	Molecular Weight (lb/lb-mole) ***54.94***
Absorptive Properties -	

Pollutant Emitted ***Mercury***	Chemical Abstract Services (CAS) Number ***7439-97-6***
Proposed Emission Rate (lb/hr) ***$3.48x10^{-6}$***	Emission Source (describe) ***Process Point***
Source Classification (process point, process fugitive, area fugitive) ***Process Point***	Pollutant Class and Form (organic/inorganic - particulate/vapor) ***Inorganic/Particulate***
Concentration in Emission Stream (ppmv) ***$3.80x10^{-5}$***	Vapor Pressure (in. Hg @ °F) ***$7.85x10^{-5}$ in Hg @ 77 °F***
Solubility ***Insoluble in water***	Molecular Weight (lb/lb-mole) ***200.59***
Absorptive Properties -	

Pollutant Emitted ***Nickel***	Chemical Abstract Services (CAS) Number ***7044-02-0***
Proposed Emission Rate (lb/hr) ***$2.92x10^{-5}$***	Emission Source (describe) ***Process Point***
Source Classification (process point, process fugitive, area fugitive) ***Process Point***	Pollutant Class and Form (organic/inorganic - particulate/vapor) ***Inorganic/Particulate***
Concentration in Emission Stream (ppmv) ***$1.09x10^{-3}$***	Vapor Pressure (in. Hg @ °F) ***0 in Hg Q 77°F***
Solubility ***Insoluble in water***	Molecular Weight (lb/lb-mole) ***58.69***
Absorptive Properties -	

Pollutant Emitted ***Selenium***	Chemical Abstract Services (CAS) Number ***7782-49-2***
Proposed Emission Rate (lb/hr) ***$1.22x10^{-5}$***	Emission Source (describe) ***Process Point***
Source Classification (process point, process fugitive, area fugitive) ***Process Point***	Pollutant Class and Form (organic/inorganic - particulate/vapor) ***Inorganic/Particulate***
Concentration in Emission Stream (ppmv) ***$3.39x10^{-4}$***	Vapor Pressure (in. Hg @ °F) ***0.29 in Hg @ 807***
Solubility ***Insoluble in water***	Molecular Weight (lb/lb-mole) ***78.96***
Absorptive Properties -	

Signature of Applicant	Date 09/26/2016

SEND COMPLETED APPLICATION AND ALL ATTACHMENTS TO:

North Dakota Department of
Health Division of Air Quality
918 E Divide Ave., 2nd Floor
Bismarck, ND 58501-1947
(701) 328-5188

PERMIT APPLICATION FOR
HAZARDOUS AIR POLLUTANT (HAP) SOURCES

NORTH DAKOTA DEPARTMENT OF HEALTH
DIVISION OF AIR QUALITY
SFN 8329 (09-12)

SECTION A1 - APPLICANT INFORMATION

Name of Firm or Organization ***Meridian Energy Group - Davis Refinery***		
Applicant's Name ***Tom Williams***		
Title ***VP of Planning &Permitting***	Telephone Number ***(707) 299-0182***	E-mail Address ***twilliams@meridianenergygroup.inc***
Mailing Address (Street & No.) ***2062 Business Center Drive, Suite 115***		
City ***Irvine***	State ***CA***	ZIP Code ***92612***

SECTION A2 - FACILITY INFORMATION

Contact Person for Air Pollution Matters ***Tom Johnson***		
Title ***Vice President of Operations***	Telephone Number ***(409)795-0792***	E-mail Address ***tjohnson@meridianenergygroup.inc***
Facility Address (Street & No. or Lat/Long to Nearest Second) ***37th Street / 46°52'45"N/103°14'55" W***		
City ***Belfield***	State ***ND***	ZIP Code ***58622***
County ***Billings***	Number of Employees at Location ***TBD***	
Land Area at Plant Site ***261*** Acres (or) Sq. Ft.	MSL Elevation at Plant ***2,685 feet***	

Describe Nature of Business/Process

Petroleum Refining / Fluid Catalytic Cracking / Raw Charger Heater

SECTION B – STACK DATA

Inside Diameter (ft) ***5.5***	Height Above Grade (ft) ***72.0***	
Gas Temperature at Exit (°F) ***785.0***	Gas Velocity at Exit (ft/sec) ***9.9***	Gas Volume (scfm) ***14,110.55***
Basis of any Estimates (attach separate sheet if necessary) ***Engineering data and Emission factors from Table 1.4-2. AP 42, Chapter 1: External Combustion Sources. See Document P-5715043-01-001-18042-I001 "EMISSIONS INVENTORY" and P-5715043-01-001-18035-I001 "BACT Analysis"***		
Are Emission Control Devices in Place? If YES – Complete SFN 8532		Yes ☐ No ☒
Nearest Residences or Building ***Utility building***	Distance (ft) ***718 ft***	Direction ***South***
Nearest Property Line ***Fenceline***	Distance (ft) ***460 ft***	Direction ***South***

SECTION C – EMISSION STREAM DATA

Source ID No. From SFN 8516 ***112-H-1201***	Mean Particle Diameter (μm) ***TBD***
Flow Rate (scfm) ***14,110.5***	Drift Velocity (ft/sec) ***9.9***
Stream Temperature (°F) ***785.0***	Particulate Concentration (gr/dscf) ***TBD***
Moisture Content (%) ***TBD***	Halogens or Metals Present? ***Metals***
Pressure (in. Hg) ***TBD***	Organic Content (ppmv) ***$1.86x10^{-1}$***
Heat Content (Btu/scfm) ***TBD***	O_2 Content (%) ***N/A***

SECTION D – POLLUTANT SPECIFIC DATA
(Complete One Box for Each Pollutant in Emission Stream)

Pollutant Emitted ***Acetaldehyde***	Chemical Abstract Services (CAS) Number ***75-07-0***
Proposed Emission Rate (lb/hr) ***$8.51x10^{-5}$***	Emission Source (describe) ***Process Point***
Source Classification (process point, process fugitive, area fugitive) ***Process Point***	Pollutant Class and Form (organic/inorganic - particulate/vapor) ***Organic Vapor***
Concentration in Emission Stream (ppmv) ***$2.07x10^{-3}$***	Vapor Pressure (in. Hg @ °F) ***35.51 in Hg @ 68°C***
Solubility ***$1x10^{+6}$ mg/L in water @ 77°F***	Molecular Weight (lb/lb-mole) ***44.05***
Absorptive Properties -	

Pollutant Emitted ***Benzene***	Chemical Abstract Services (CAS) Number ***71-43-2***
Proposed Emission Rate (lb/hr) ***$1.49x10^{-5}$***	Emission Source (describe) ***Process Point***
Source Classification (process point, process fugitive, area fugitive) ***Process Point***	Pollutant Class and Form (organic/inorganic - particulate/vapor) ***Organic /Vapor***
Concentration in Emission Stream (ppmv) ***$2.05x10^{-4}$***	Vapor Pressure (in. Hg @ °F) ***3.73 in Hg @ 77 °F***
Solubility ***In water $1.79x10^{3}$ mg/L @ 77 °F***	Molecular Weight (lb/lb-mole) ***78.11***
Absorptive Properties -	

Pollutant Emitted ***Dichlorobenzene***	Chemical Abstract Services (CAS) Number ***Varies***
Proposed Emission Rate (lb/hr) ***$8.51x10^{-6}$***	Emission Source (describe) ***Process Point***
Source Classification (process point, process fugitive, area fugitive) ***Process Point***	Pollutant Class and Form (organic/inorganic - particulate/vapor) ***Organic /Vapor***
Concentration in Emission Stream (ppmv) ***$6.22x10^{-5}$***	Vapor Pressure (in. Hg @ °F) ***Varies***
Solubility ***Varies***	Molecular Weight (lb/lb-mole) ***147.00***
Absorptive Properties -	

Pollutant Emitted ***Ethylbenzene***	Chemical Abstract Services (CAS) Number ***100-41-4***
Proposed Emission Rate (lb/hr) ***$1.13x10^{-4}$***	Emission Source (describe) ***Process Point***
Source Classification (process point, process fugitive, area fugitive) ***Process Point***	Pollutant Class and Form (organic/inorganic - particulate/vapor) ***Organic /Vapor***
Concentration in Emission Stream (ppmv) ***$1.15x10^{-3}$***	Vapor Pressure (in. Hg @ °F) ***0.37 in Hg @ 77°F***
Solubility ***In water 0.014 g/100mL @ 59 °F***	Molecular Weight (lb/lb-mole) ***106.17***
Absorptive Properties -	

Pollutant Emitted ***Formaldehyde***	Chemical Abstract Services (CAS) Number ***50-00-0***
Proposed Emission Rate (lb/hr) ***$5.24x10^{-4}$***	Emission Source (describe) ***Process Point***
Source Classification (process point, process fugitive, area fugitive) ***Process Point***	Pollutant Class and Form (organic/inorganic - particulate/vapor) ***Organic /Vapor***
Concentration in Emission Stream (ppmv) ***$1.88x10^{-2}$***	Vapor Pressure (in. Hg @ °F) ***0.15 in Hg @ 77 °F***
Solubility ***In water 4.00 $x10^{5}$ mg/L @ 68°F***	Molecular Weight (lb/lb-mole) ***30.03***
Absorptive Properties -	

Pollutant Emitted ***Hexane***	Chemical Abstract Services (CAS) Number ***110-54-5***
Proposed Emission Rate (lb/hr) ***$1.28x10^{-2}$***	Emission Source (describe) ***Process Point***
Source Classification (process point, process fugitive, area fugitive) ***Process Point***	Pollutant Class and Form (organic/inorganic - particulate/vapor) ***Organic /Vapor***
Concentration in Emission Stream (ppmv) ***$1.59x10^{-1}$***	Vapor Pressure (in. Hg @ °F) ***5.90 in Hg @ 68 °F***
Solubility ***Insoluble in water***	Molecular Weight (lb/lb-mole) ***86.1***
Absorptive Properties -	

Pollutant Emitted ***Naphthalene***	Chemical Abstract Services (CAS) Number ***91-20-3***
Proposed Emission Rate (lb/hr) ***$4.25x10^{-6}$***	Emission Source (describe) ***Process Point***
Source Classification (process point, process fugitive, area fugitive) ***Process Point***	Pollutant Class and Form (organic/inorganic - particulate/vapor) ***Organic /Vapor***
Concentration in Emission Stream (ppmv) ***$3.56x10^{-5}$***	Vapor Pressure (in. Hg @ °F) ***0.003 in Hg @ 77 °F***
Solubility ***In water 31 mg/L @ 77 °F***	Molecular Weight (lb/lb-mole) ***128.17***
Absorptive Properties -	

Pollutant Emitted ***Toluene***	Chemical Abstract Services (CAS) Number ***108-88-3***
Proposed Emission Rate (lb/hr) ***$2.34x10^{-5}$***	Emission Source (describe) ***Process Point***
Source Classification (process point, process fugitive, area fugitive) ***Process Point***	Pollutant Class and Form (organic/inorganic - particulate/vapor) ***Organic /Vapor***
Concentration in Emission Stream (ppmv) ***$2.73x10^{-4}$***	Vapor Pressure (in. Hg @ °F) ***1.12 in Hg @ 77°F***
Solubility ***In water 526 mg/L @ 77°F***	Molecular Weight (lb/lb-mole) ***92.14***
Absorptive Properties -	

Pollutant Emitted ***Xylene***	Chemical Abstract Services (CAS) Number ***95-47-6***
Proposed Emission Rate (lb/hr) ***$1.77x10^{-4}$***	Emission Source (describe) ***Process Point***
Source Classification (process point, process fugitive, area fugitive) ***Process Point***	Pollutant Class and Form (organic/inorganic - particulate/vapor) ***Organic /Vapor***
Concentration in Emission Stream (ppmv) ***$1.79x10^{-3}$***	Vapor Pressure (in. Hg @ °F) ***0.26 in Hg @ 77°F***
Solubility ***In water 178 mg/L @ 77°F***	Molecular Weight (lb/lb-mole) ***106.16***
Absorptive Properties -	

Pollutant Emitted ***PAH***	Chemical Abstract Services (CAS) Number ***N/A***
Proposed Emission Rate (lb/hr) ***$3.02x10^{-5}$***	Emission Source (describe) ***Process Point***
Source Classification (process point, process fugitive, area fugitive) ***Process Point***	Pollutant Class and Form (organic/inorganic - particulate/vapor) ***Organic /Vapor***
Concentration in Emission Stream (ppmv) ***$3.32x10^{-4}$***	Vapor Pressure (in. Hg @ °F) ***N/A***
Solubility ***N/A***	Molecular Weight (lb/lb-mole) ***TBD***
Absorptive Properties -	

Pollutant Emitted ***Antimony***	Chemical Abstract Services (CAS) Number ***7740-36-0***
Proposed Emission Rate (lb/hr) ***$1.47x10^{-5}$***	Emission Source (describe) ***Process Point***
Source Classification (process point, process fugitive, area fugitive) ***Process Point***	Pollutant Class and Form (organic/inorganic - particulate/vapor) ***Inorganic/particulate***
Concentration in Emission Stream (ppmv) ***$1.30x10^{-4}$***	Vapor Pressure (in. Hg @ °F) ***0 in Hg @ 77°F***
Solubility ***Insoluble in water***	Molecular Weight (lb/lb-mole) ***121.76***
Absorptive Properties -	

Pollutant Emitted ***Arsenic***	Chemical Abstract Services (CAS) Number ***7440-38-2***
Proposed Emission Rate (lb/hr) ***$5.67x10^{-6}$***	Emission Source (describe) ***Process Point***
Source Classification (process point, process fugitive, area fugitive) ***Process Point***	Pollutant Class and Form (organic/inorganic - particulate/vapor) ***Inorganic/Particulate***
Concentration in Emission Stream (ppmv) ***$8.13x10^{-5}$***	Vapor Pressure (in. Hg @ °F) ***0 in Hg @ 77°F***
Solubility ***Insoluble in water***	Molecular Weight (lb/lb-mole)
Absorptive Properties -	

Pollutant Emitted ***Beryllium***	Chemical Abstract Services (CAS) Number ***7440-41-7***
Proposed Emission Rate (lb/hr) ***$3.69x10^{-6}$***	Emission Source (describe) ***Process Point***
Source Classification (process point, process fugitive, area fugitive) ***Process Point***	Pollutant Class and Form (organic/inorganic - particulate/vapor) ***Inorganic/Particulate***
Concentration in Emission Stream (ppmv) ***$4.39x10^{-4}$***	Vapor Pressure (in. Hg @ °F) ***0 in Hg @ 77°F***
Solubility ***Insoluble in water***	Molecular Weight (lb/lb-mole) ***9.01***
Absorptive Properties -	

Pollutant Emitted ***Cadmium***	Chemical Abstract Services (CAS) Number ***7440-43-9***
Proposed Emission Rate (lb/hr) ***$3.12x10^{-5}$***	Emission Source (describe) ***Process Point***
Source Classification (process point, process fugitive, area fugitive) ***Process Point***	Pollutant Class and Form (organic/inorganic - particulate/vapor) ***Inorganic/Particulate***
Concentration in Emission Stream (ppmv) ***$2.98x10^{-4}$***	Vapor Pressure (in. Hg @ °F) ***0 in Hg@ 77°F***
Solubility ***Insoluble in water***	Molecular Weight (lb/lb-mole)
Absorptive Properties -	

Pollutant Emitted ***Chromium (hexavalent)***	Chemical Abstract Services (CAS) Number ***1333-82-0***
Proposed Emission Rate (lb/hr) ***$7.94x10^{-6}$***	Emission Source (describe) ***Process Point***
Source Classification (process point, process fugitive, area fugitive) ***Process Point***	Pollutant Class and Form (organic/inorganic - particulate/vapor) ***Inorganic/Particulate***
Concentration in Emission Stream (ppmv) ***$1.64x10^{-4}$***	Vapor Pressure (in. Hg @ °F) ***0 in Hg @77°F***
Solubility ***1,660 g/L in water @ 77°F***	Molecular Weight (lb/lb-mole) ***51.99***
Absorptive Properties -	

Pollutant Emitted ***Chromium***	Chemical Abstract Services (CAS) Number ***7440-47-3***
Proposed Emission Rate (lb/hr) ***$3.97x10^{-5}$***	Emission Source (describe) ***Process Point***
Source Classification (process point, process fugitive, area fugitive) ***Process Point***	Pollutant Class and Form (organic/inorganic - particulate/vapor) ***Inorganic/Particulate***
Concentration in Emission Stream (ppmv) ***$8.20x10^{-4}$***	Vapor Pressure (in. Hg @ °F) ***0 in Hg @ 77°F***
Solubility ***Insoluble in water***	Molecular Weight (lb/lb-mole) ***51.99***
Absorptive Properties -	

Pollutant Emitted ***Cobalt***	Chemical Abstract Services (CAS) Number ***7440-48-4***
Proposed Emission Rate (lb/hr) ***$2.32x10^{-6}$***	Emission Source (describe) ***Process Point***
Source Classification (process point, process fugitive, area fugitive) ***Process Point***	Pollutant Class and Form (organic/inorganic - particulate/vapor) ***Inorganic/Particulate***
Concentration in Emission Stream (ppmv) ***$4.24x10^{-5}$***	Vapor Pressure (in. Hg @ °F) ***0 in Hg @ 77°F***
Solubility ***Insoluble in water***	Molecular Weight (lb/lb-mole) ***58.93***
Absorptive Properties -	

Pollutant Emitted ***Manganese***	Chemical Abstract Services (CAS) Number
Proposed Emission Rate (lb/hr) ***$1.05x10^{-5}$***	Emission Source (describe) ***Process Point***
Source Classification (process point, process fugitive, area fugitive) ***Process Point***	Pollutant Class and Form (organic/inorganic - particulate/vapor) ***Inorganic/Particulate***
Concentration in Emission Stream (ppmv) ***$2.05x10^{-4}$***	Vapor Pressure (in. Hg @ °F) ***0 in Hg @ 77 °F***
Solubility ***Insoluble in water***	Molecular Weight (lb/lb-mole) ***54.94***
Absorptive Properties -	

Pollutant Emitted ***Mercury***	Chemical Abstract Services (CAS) Number ***7439-97-6***
Proposed Emission Rate (lb/hr) ***$7.09x10^{-6}$***	Emission Source (describe) ***Process Point***
Source Classification (process point, process fugitive, area fugitive) ***Process Point***	Pollutant Class and Form (organic/inorganic - particulate/vapor) ***Inorganic/Particulate***
Concentration in Emission Stream (ppmv) ***$3.80x10^{-5}$***	Vapor Pressure (in. Hg @ °F) ***$7.85x10^{-5}$ in Hg @ 77 °F***
Solubility ***Insoluble in water***	Molecular Weight (lb/lb-mole) ***200.59***
Absorptive Properties -	

Pollutant Emitted ***Nickel***	Chemical Abstract Services (CAS) Number ***7044-02-0***
Proposed Emission Rate (lb/hr) ***$5.95x10^{-5}$***	Emission Source (describe) ***Process Point***
Source Classification (process point, process fugitive, area fugitive) ***Process Point***	Pollutant Class and Form (organic/inorganic - particulate/vapor) ***Inorganic/Particulate***
Concentration in Emission Stream (ppmv) ***$1.09x10^{-3}$***	Vapor Pressure (in. Hg @ °F) ***0 in Hg Q 77°F***
Solubility ***Insoluble in water***	Molecular Weight (lb/lb-mole) ***58.69***
Absorptive Properties -	

Pollutant Emitted ***Selenium***	Chemical Abstract Services (CAS) Number ***7782-49-2***
Proposed Emission Rate (lb/hr) ***$2.49x10^{-5}$***	Emission Source (describe) ***Process Point***
Source Classification (process point, process fugitive, area fugitive) ***Process Point***	Pollutant Class and Form (organic/inorganic - particulate/vapor) ***Inorganic/Particulate***
Concentration in Emission Stream (ppmv) ***$3.39x10^{-4}$***	Vapor Pressure (in. Hg @ °F) ***0.29 in Hg @ 807***
Solubility ***Insoluble in water***	Molecular Weight (lb/lb-mole) ***78.96***
Absorptive Properties -	

Signature of Applicant	Date 09/26/2016

SEND COMPLETED APPLICATION AND ALL ATTACHMENTS TO:

North Dakota Department of
Health Division of Air Quality
918 E Divide Ave., 2nd Floor
Bismarck, ND 58501-1947
(701) 328-5188

PERMIT APPLICATION FOR
HAZARDOUS AIR POLLUTANT (HAP) SOURCES

NORTH DAKOTA DEPARTMENT OF HEALTH
DIVISION OF AIR QUALITY
SFN 8329 (09-12)

SECTION A1 - APPLICANT INFORMATION

Name of Firm or Organization ***Meridian Energy Group - Davis Refinery***		
Applicant's Name ***Tom Williams***		
Title ***VP of Planning &Permitting***	Telephone Number ***(707) 299-0182***	E-mail Address ***twilliams@meridianenergygroup.inc***
Mailing Address (Street & No.) ***2062 Business Center Drive, Suite 115***		
City ***Irvine***	State ***CA***	ZIP Code ***92612***

SECTION A2 - FACILITY INFORMATION

Contact Person for Air Pollution Matters ***Tom Johnson***		
Title ***Vice President of Operations***	Telephone Number ***(409)795-0792***	E-mail Address ***tjohnson@meridianenergygroup.inc***
Facility Address (Street & No. or Lat/Long to Nearest Second) ***37th Street / 46°52'45"N/103°14'55" W***		
City ***Belfield***	State ***ND***	ZIP Code ***58622***
County ***Billings***	Number of Employees at Location ***TBD***	
Land Area at Plant Site ***261*** Acres (or) Sq. Ft.	MSL Elevation at Plant ***2,685 feet***	

Describe Nature of Business/Process ***Petroleum Refining / FCC Naphtha Hydrotreater / Heater***

SECTION B – STACK DATA

Inside Diameter (ft) ***3.0***	Height Above Grade (ft) ***91.0***	
Gas Temperature at Exit (°F) ***784.3***	Gas Velocity at Exit (ft/sec) ***20.5***	Gas Volume (scfm) ***8,699.78***
Basis of any Estimates (attach separate sheet if necessary) ***Engineering data and Emission factors from Table 1.4-2. AP 42, Chapter 1: External Combustion Sources. See Document P-5715043-01-001-18042-I001 "EMISSIONS INVENTORY" and P-5715043-01-001-18035-I001 "BACT Analysis"***		
Are Emission Control Devices in Place? If YES – Complete SFN 8532		Yes ☐ No ☒
Nearest Residences or Building ***Utility building***	Distance (ft) ***696 ft***	Direction ***South***
Nearest Property Line ***Fenceline***	Distance (ft) ***744 ft***	Direction ***South***

SECTION C – EMISSION STREAM DATA

Source ID No. From SFN 8516 ***114-H-1401***	Mean Particle Diameter (μm) ***TBD***
Flow Rate (scfm) ***8,699.78***	Drift Velocity (ft/sec) ***20.5***
Stream Temperature (°F) ***784.3***	Particulate Concentration (gr/dscf) ***TBD***
Moisture Content (%) ***TBD***	Halogens or Metals Present? ***Metals***
Pressure (in. Hg) ***TBD***	Organic Content (ppmv) $3.72x10^{-1}$
Heat Content (Btu/scfm) ***TBD***	O_2 Content (%) ***N/A***

SECTION D – POLLUTANT SPECIFIC DATA
(Complete One Box for Each Pollutant in Emission Stream)

Pollutant Emitted ***Acetaldehyde***	Chemical Abstract Services (CAS) Number ***75-07-0***
Proposed Emission Rate (lb/hr) $5.24x10^{-5}$	Emission Source (describe) ***Process Point***
Source Classification (process point, process fugitive, area fugitive) ***Process Point***	Pollutant Class and Form (organic/inorganic - particulate/vapor) ***Organic Vapor***
Concentration in Emission Stream (ppmv) $2.07x10^{-3}$	Vapor Pressure (in. Hg @ °F) ***35.51 in Hg @ 68°C***
Solubility $1x10^{+6}$ ***mg/L in water @ 77°F***	Molecular Weight (lb/lb-mole) ***44.05***
Absorptive Properties -	

Pollutant Emitted ***Benzene***	Chemical Abstract Services (CAS) Number ***71-43-2***
Proposed Emission Rate (lb/hr) $9.18x10^{-6}$	Emission Source (describe) ***Process Point***
Source Classification (process point, process fugitive, area fugitive) ***Process Point***	Pollutant Class and Form (organic/inorganic - particulate/vapor) ***Organic /Vapor***
Concentration in Emission Stream (ppmv) $2.05x10^{-4}$	Vapor Pressure (in. Hg @ °F) ***3.73 in Hg @ 77 °F***
Solubility ***In water*** $1.79x10^{3}$ ***mg/L @ 77 °F***	Molecular Weight (lb/lb-mole) ***78.11***
Absorptive Properties -	

Pollutant Emitted ***Dichlorobenzene***	Chemical Abstract Services (CAS) Number ***Varies***
Proposed Emission Rate (lb/hr) $5.24x10^{-6}$	Emission Source (describe) ***Process Point***
Source Classification (process point, process fugitive, area fugitive) ***Process Point***	Pollutant Class and Form (organic/inorganic - particulate/vapor) ***Organic /Vapor***
Concentration in Emission Stream (ppmv) $6.21x10^{-5}$	Vapor Pressure (in. Hg @ °F) ***Varies***
Solubility ***Varies***	Molecular Weight (lb/lb-mole) ***147.00***
Absorptive Properties -	

Pollutant Emitted ***Ethylbenzene***	Chemical Abstract Services (CAS) Number ***100-41-4***
Proposed Emission Rate (lb/hr) ***$6.99x10^{-5}$***	Emission Source (describe) ***Process Point***
Source Classification (process point, process fugitive, area fugitive) ***Process Point***	Pollutant Class and Form (organic/inorganic - particulate/vapor) ***Organic /Vapor***
Concentration in Emission Stream (ppmv) ***$1.15x10^{-3}$***	Vapor Pressure (in. Hg @ °F) ***0.37 in Hg @ 77°F***
Solubility ***In water 0.014 g/100mL @ 59 °F***	Molecular Weight (lb/lb-mole) ***106.17***
Absorptive Properties -	

Pollutant Emitted ***Formaldehyde***	Chemical Abstract Services (CAS) Number ***50-00-0***
Proposed Emission Rate (lb/hr) ***$3.23x10^{-4}$***	Emission Source (describe) ***Process Point***
Source Classification (process point, process fugitive, area fugitive) ***Process Point***	Pollutant Class and Form (organic/inorganic - particulate/vapor) ***Organic /Vapor***
Concentration in Emission Stream (ppmv) ***$1.88x10^{-2}$***	Vapor Pressure (in. Hg @ °F) ***0.15 in Hg @ 77 °F***
Solubility ***In water 4.00 $x10^{5}$ mg/L @ 68°F***	Molecular Weight (lb/lb-mole) ***30.03***
Absorptive Properties -	

Pollutant Emitted ***Hexane***	Chemical Abstract Services (CAS) Number ***110-54-5***
Proposed Emission Rate (lb/hr) ***$7.87x10^{-3}$***	Emission Source (describe) ***Process Point***
Source Classification (process point, process fugitive, area fugitive) ***Process Point***	Pollutant Class and Form (organic/inorganic - particulate/vapor) ***Organic /Vapor***
Concentration in Emission Stream (ppmv) ***$1.59x10^{-1}$***	Vapor Pressure (in. Hg @ °F) ***5.90 in Hg @ 68 °F***
Solubility ***Insoluble in water***	Molecular Weight (lb/lb-mole) ***86.1***
Absorptive Properties -	

Pollutant Emitted ***Naphthalene***	Chemical Abstract Services (CAS) Number ***91-20-3***
Proposed Emission Rate (lb/hr) ***$2.62x10^{-6}$***	Emission Source (describe) ***Process Point***
Source Classification (process point, process fugitive, area fugitive) ***Process Point***	Pollutant Class and Form (organic/inorganic - particulate/vapor) ***Organic /Vapor***
Concentration in Emission Stream (ppmv) ***$3.56x10^{-5}$***	Vapor Pressure (in. Hg @ °F) ***0.003 in Hg @ 77 °F***
Solubility ***In water 31 mg/L @ 77 °F***	Molecular Weight (lb/lb-mole) ***128.17***
Absorptive Properties -	

Pollutant Emitted ***Toluene***	Chemical Abstract Services (CAS) Number ***108-88-3***
Proposed Emission Rate (lb/hr) ***$1.44x10^{-5}$***	Emission Source (describe) ***Process Point***
Source Classification (process point, process fugitive, area fugitive) ***Process Point***	Pollutant Class and Form (organic/inorganic - particulate/vapor) ***Organic /Vapor***
Concentration in Emission Stream (ppmv) ***$2.73x10^{-4}$***	Vapor Pressure (in. Hg @ °F) ***1.12 in Hg @ 77°F***
Solubility ***In water 526 mg/L @ 77°F***	Molecular Weight (lb/lb-mole) ***92.14***
Absorptive Properties -	

Pollutant Emitted ***Xylene***	Chemical Abstract Services (CAS) Number ***95-47-6***
Proposed Emission Rate (lb/hr) ***$1.09x10^{-4}$***	Emission Source (describe) ***Process Point***
Source Classification (process point, process fugitive, area fugitive) ***Process Point***	Pollutant Class and Form (organic/inorganic - particulate/vapor) ***Organic /Vapor***
Concentration in Emission Stream (ppmv) ***$1.79x10^{-3}$***	Vapor Pressure (in. Hg @ °F) ***0.26 in Hg @ 77°F***
Solubility ***In water 178 mg/L @ 77°F***	Molecular Weight (lb/lb-mole) ***106.16***
Absorptive Properties -	

Pollutant Emitted ***PAH***	Chemical Abstract Services (CAS) Number ***N/A***
Proposed Emission Rate (lb/hr) ***$1.86x10^{-5}$***	Emission Source (describe) ***Process Point***
Source Classification (process point, process fugitive, area fugitive) ***Process Point***	Pollutant Class and Form (organic/inorganic - particulate/vapor) ***Organic /Vapor***
Concentration in Emission Stream (ppmv) ***$3.32x10^{-4}$***	Vapor Pressure (in. Hg @ °F) ***N/A***
Solubility ***N/A***	Molecular Weight (lb/lb-mole) ***TBD***
Absorptive Properties -	

Pollutant Emitted ***Antimony***	Chemical Abstract Services (CAS) Number ***7740-36-0***
Proposed Emission Rate (lb/hr) ***$9.09x10^{-6}$***	Emission Source (describe) ***Process Point***
Source Classification (process point, process fugitive, area fugitive) ***Process Point***	Pollutant Class and Form (organic/inorganic - particulate/vapor) ***Inorganic/particulate***
Concentration in Emission Stream (ppmv) ***$1.30x10^{-4}$***	Vapor Pressure (in. Hg @ °F) ***0 in Hg @ 77°F***
Solubility ***Insoluble in water***	Molecular Weight (lb/lb-mole) ***121.76***
Absorptive Properties -	

Pollutant Emitted ***Arsenic***	Chemical Abstract Services (CAS) Number ***7440-38-2***
Proposed Emission Rate (lb/hr) ***$3.50x10^{-6}$***	Emission Source (describe) ***Process Point***
Source Classification (process point, process fugitive, area fugitive) ***Process Point***	Pollutant Class and Form (organic/inorganic - particulate/vapor) ***Inorganic/Particulate***
Concentration in Emission Stream (ppmv) ***$8.13x10^{-5}$***	Vapor Pressure (in. Hg @ °F) ***0 in Hg @ 77°F***
Solubility ***Insoluble in water***	Molecular Weight (lb/lb-mole)
Absorptive Properties -	

Pollutant Emitted ***Beryllium***	Chemical Abstract Services (CAS) Number ***7440-41-7***
Proposed Emission Rate (lb/hr) ***$2.27x10^{-6}$***	Emission Source (describe) ***Process Point***
Source Classification (process point, process fugitive, area fugitive) ***Process Point***	Pollutant Class and Form (organic/inorganic - particulate/vapor) ***Inorganic/Particulate***
Concentration in Emission Stream (ppmv) ***$4.39x10^{-4}$***	Vapor Pressure (in. Hg @ °F) ***0 in Hg @ 77°F***
Solubility ***Insoluble in water***	Molecular Weight (lb/lb-mole) ***9.01***
Absorptive Properties -	

Pollutant Emitted ***Cadmium***	Chemical Abstract Services (CAS) Number ***7440-43-9***
Proposed Emission Rate (lb/hr) ***$1.92x10^{-5}$***	Emission Source (describe) ***Process Point***
Source Classification (process point, process fugitive, area fugitive) ***Process Point***	Pollutant Class and Form (organic/inorganic - particulate/vapor) ***Inorganic/Particulate***
Concentration in Emission Stream (ppmv) ***$2.98x10^{-4}$***	Vapor Pressure (in. Hg @ °F) ***0 in Hg@ 77°F***
Solubility ***Insoluble in water***	Molecular Weight (lb/lb-mole)
Absorptive Properties -	

Pollutant Emitted ***Chromium (hexavalent)***	Chemical Abstract Services (CAS) Number ***1333-82-0***
Proposed Emission Rate (lb/hr) ***$4.89x10^{-6}$***	Emission Source (describe) ***Process Point***
Source Classification (process point, process fugitive, area fugitive) ***Process Point***	Pollutant Class and Form (organic/inorganic - particulate/vapor) ***Inorganic/Particulate***
Concentration in Emission Stream (ppmv) ***$1.64x10^{-4}$***	Vapor Pressure (in. Hg @ °F) ***0 in Hg @77°F***
Solubility ***1,660 g/L in water @ 77°F***	Molecular Weight (lb/lb-mole) ***51.99***
Absorptive Properties -	

Pollutant Emitted ***Chromium***	Chemical Abstract Services (CAS) Number ***7440-47-3***
Proposed Emission Rate (lb/hr) ***$2.45x10^{-5}$***	Emission Source (describe) ***Process Point***
Source Classification (process point, process fugitive, area fugitive) ***Process Point***	Pollutant Class and Form (organic/inorganic - particulate/vapor) ***Inorganic/Particulate***
Concentration in Emission Stream (ppmv) ***$8.20x10^{-4}$***	Vapor Pressure (in. Hg @ °F) ***0 in Hg @ 77°F***
Solubility ***Insoluble in water***	Molecular Weight (lb/lb-mole) ***51.99***
Absorptive Properties -	

Pollutant Emitted ***Cobalt***	Chemical Abstract Services (CAS) Number ***7440-48-4***
Proposed Emission Rate (lb/hr) ***$1.43x10^{-6}$***	Emission Source (describe) ***Process Point***
Source Classification (process point, process fugitive, area fugitive) ***Process Point***	Pollutant Class and Form (organic/inorganic - particulate/vapor) ***Inorganic/Particulate***
Concentration in Emission Stream (ppmv) ***$4.24x10^{-5}$***	Vapor Pressure (in. Hg @ °F) ***0 in Hg @ 77°F***
Solubility ***Insoluble in water***	Molecular Weight (lb/lb-mole) ***58.93***
Absorptive Properties -	

Pollutant Emitted ***Manganese***	Chemical Abstract Services (CAS) Number
Proposed Emission Rate (lb/hr) ***$6.47x10^{-6}$***	Emission Source (describe) ***Process Point***
Source Classification (process point, process fugitive, area fugitive) ***Process Point***	Pollutant Class and Form (organic/inorganic - particulate/vapor) ***Inorganic/Particulate***
Concentration in Emission Stream (ppmv) ***$2.05x10^{-4}$***	Vapor Pressure (in. Hg @ °F) ***0 in Hg @ 77 °F***
Solubility ***Insoluble in water***	Molecular Weight (lb/lb-mole) ***54.94***
Absorptive Properties -	

Pollutant Emitted ***Mercury***	Chemical Abstract Services (CAS) Number ***7439-97-6***
Proposed Emission Rate (lb/hr) ***$4.37x10^{-6}$***	Emission Source (describe) ***Process Point***
Source Classification (process point, process fugitive, area fugitive) ***Process Point***	Pollutant Class and Form (organic/inorganic - particulate/vapor) ***Inorganic/Particulate***
Concentration in Emission Stream (ppmv) ***$3.79x10^{-5}$***	Vapor Pressure (in. Hg @ °F) ***$7.85x10^{-5}$ in Hg @ 77 °F***
Solubility ***Insoluble in water***	Molecular Weight (lb/lb-mole) ***200.59***
Absorptive Properties -	

Pollutant Emitted ***Nickel***	Chemical Abstract Services (CAS) Number ***7044-02-0***
Proposed Emission Rate (lb/hr) ***$3.67x10^{-5}$***	Emission Source (describe) ***Process Point***
Source Classification (process point, process fugitive, area fugitive) ***Process Point***	Pollutant Class and Form (organic/inorganic - particulate/vapor) ***Inorganic/Particulate***
Concentration in Emission Stream (ppmv) ***$1.09x10^{-3}$***	Vapor Pressure (in. Hg @ °F) ***0 in Hg Q 77°F***
Solubility ***Insoluble in water***	Molecular Weight (lb/lb-mole) ***58.69***
Absorptive Properties -	

Pollutant Emitted ***Selenium***	Chemical Abstract Services (CAS) Number ***7782-49-2***
Proposed Emission Rate (lb/hr) ***$1.54x10^{-5}$***	Emission Source (describe) ***Process Point***
Source Classification (process point, process fugitive, area fugitive) ***Process Point***	Pollutant Class and Form (organic/inorganic - particulate/vapor) ***Inorganic/Particulate***
Concentration in Emission Stream (ppmv) ***$3.39x10^{-4}$***	Vapor Pressure (in. Hg @ °F) ***0.29 in Hg @ 807***
Solubility ***Insoluble in water***	Molecular Weight (lb/lb-mole) ***78.96***
Absorptive Properties -	

Signature of Applicant	Date 09/26/2016

SEND COMPLETED APPLICATION AND ALL ATTACHMENTS TO:

North Dakota Department of
Health Division of Air Quality
918 E Divide Ave., 2nd Floor
Bismarck, ND 58501-1947
(701) 328-5188

PERMIT APPLICATION FOR
HAZARDOUS AIR POLLUTANT (HAP) SOURCES

NORTH DAKOTA DEPARTMENT OF HEALTH
DIVISION OF AIR QUALITY
SFN 8329 (09-12)

SECTION A1 - APPLICANT INFORMATION

Name of Firm or Organization ***Meridian Energy Group - Davis Refinery***		
Applicant's Name ***Tom Williams***		
Title ***VP of Planning &Permitting***	Telephone Number ***(707) 299-0182***	E-mail Address ***twilliams@meridianenergygroup.inc***
Mailing Address (Street & No.) ***2062 Business Center Drive, Suite 115***		
City ***Irvine***	State ***CA***	ZIP Code ***92612***

SECTION A2 - FACILITY INFORMATION

Contact Person for Air Pollution Matters ***Tom Johnson***		
Title ***Vice President of Operations***	Telephone Number ***(409)795-0792***	E-mail Address ***tjohnson@meridianenergygroup.inc***
Facility Address (Street & No. or Lat/Long to Nearest Second) ***37th Street / 46°52'45"N/103°14'55" W***		
City ***Belfield***	State ***ND***	ZIP Code ***58622***
County ***Billings***	Number of Employees at Location ***TBD***	
Land Area at Plant Site ***261*** Acres (or) Sq. Ft.	MSL Elevation at Plant ***2,685 feet***	

Describe Nature of Business/Process

Petroleum Refining / Isomerization heater #1

SECTION B – STACK DATA

Inside Diameter (ft) ***2.7***	Height Above Grade (ft) ***36.0***	
Gas Temperature at Exit (°F) ***823.8***	Gas Velocity at Exit (ft/sec) ***2.5***	Gas Volume (scfm) ***852.56***
Basis of any Estimates (attach separate sheet if necessary) ***Engineering data and Emission factors from Table 1.4-2. AP 42, Chapter 1: External Combustion Sources. See Document P-5715043-01-001-18042-I001 "EMISSIONS INVENTORY" and P-5715043-01-001-18035-I001 "BACT Analysis"***		
Are Emission Control Devices in Place? If YES – Complete SFN 8532		Yes ☐ No ☒
Nearest Residences or Building ***Utility building***	Distance (ft) ***959 ft***	Direction ***Southwest***
Nearest Property Line ***Fenceline***	Distance (ft) ***708 ft***	Direction ***East***

SECTION C – EMISSION STREAM DATA

Source ID No. From SFN 8516 ***117-H-1701***	Mean Particle Diameter (μm) ***TBD***
Flow Rate (scfm) ***852.56***	Drift Velocity (ft/sec) ***2.5***
Stream Temperature (°F) ***823.8***	Particulate Concentration (gr/dscf) ***TBD***
Moisture Content (%) ***TBD***	Halogens or Metals Present? ***Metals***
Pressure (in. Hg) ***TBD***	Organic Content (ppmv) $1.85x10^{-1}$
Heat Content (Btu/scfm) ***TBD***	O_2 Content (%) ***N/A***

SECTION D – POLLUTANT SPECIFIC DATA
(Complete One Box for Each Pollutant in Emission Stream)

Pollutant Emitted ***Acetaldehyde***	Chemical Abstract Services (CAS) Number ***75-07-0***
Proposed Emission Rate (lb/hr) $4.95x10^{-6}$	Emission Source (describe) ***Process Point***
Source Classification (process point, process fugitive, area fugitive) ***Process Point***	Pollutant Class and Form (organic/inorganic - particulate/vapor) ***Organic Vapor***
Concentration in Emission Stream (ppmv) $2.06x10^{-3}$	Vapor Pressure (in. Hg @ °F) ***35.51 in Hg @ 68°C***
Solubility $1x10^{+6}$ ***mg/L in water @ 77°F***	Molecular Weight (lb/lb-mole) ***44.05***
Absorptive Properties -	

Pollutant Emitted ***Benzene***	Chemical Abstract Services (CAS) Number ***71-43-2***
Proposed Emission Rate (lb/hr) $8.66x10^{-7}$	Emission Source (describe) ***Process Point***
Source Classification (process point, process fugitive, area fugitive) ***Process Point***	Pollutant Class and Form (organic/inorganic - particulate/vapor) ***Organic /Vapor***
Concentration in Emission Stream (ppmv) $2.03x10^{-4}$	Vapor Pressure (in. Hg @ °F) ***3.73 in Hg @ 77 °F***
Solubility ***In water*** $1.79x10^{3}$ ***mg/L @ 77 °F***	Molecular Weight (lb/lb-mole) ***78.11***
Absorptive Properties -	

Pollutant Emitted ***Dichlorobenzene***	Chemical Abstract Services (CAS) Number ***Varies***
Proposed Emission Rate (lb/hr) $4.95x10^{-7}$	Emission Source (describe) ***Process Point***
Source Classification (process point, process fugitive, area fugitive) ***Process Point***	Pollutant Class and Form (organic/inorganic - particulate/vapor) ***Organic /Vapor***
Concentration in Emission Stream (ppmv) $6.17x10^{-5}$	Vapor Pressure (in. Hg @ °F) ***Varies***
Solubility ***Varies***	Molecular Weight (lb/lb-mole) ***147.00***
Absorptive Properties -	

Pollutant Emitted ***Ethylbenzene***	Chemical Abstract Services (CAS) Number ***100-41-4***
Proposed Emission Rate (lb/hr) ***$6.60x10^{-6}$***	Emission Source (describe) ***Process Point***
Source Classification (process point, process fugitive, area fugitive) ***Process Point***	Pollutant Class and Form (organic/inorganic - particulate/vapor) ***Organic /Vapor***
Concentration in Emission Stream (ppmv) ***$1.14x10^{-3}$***	Vapor Pressure (in. Hg @ °F) ***0.37 in Hg @ 77°F***
Solubility ***In water 0.014 g/100mL @ 59 °F***	Molecular Weight (lb/lb-mole) ***106.17***
Absorptive Properties -	

Pollutant Emitted ***Formaldehyde***	Chemical Abstract Services (CAS) Number ***50-00-0***
Proposed Emission Rate (lb/hr) ***$3.05x10^{-5}$***	Emission Source (describe) ***Process Point***
Source Classification (process point, process fugitive, area fugitive) ***Process Point***	Pollutant Class and Form (organic/inorganic - particulate/vapor) ***Organic /Vapor***
Concentration in Emission Stream (ppmv) ***$1.86x10^{-2}$***	Vapor Pressure (in. Hg @ °F) ***0.15 in Hg @ 77 °F***
Solubility ***In water 4.00 $x10^{5}$ mg/L @ 68°F***	Molecular Weight (lb/lb-mole) ***30.03***
Absorptive Properties -	

Pollutant Emitted ***Hexane***	Chemical Abstract Services (CAS) Number ***110-54-5***
Proposed Emission Rate (lb/hr) ***$7.43x10^{-4}$***	Emission Source (describe) ***Process Point***
Source Classification (process point, process fugitive, area fugitive) ***Process Point***	Pollutant Class and Form (organic/inorganic - particulate/vapor) ***Organic /Vapor***
Concentration in Emission Stream (ppmv) ***$1.58x10^{-1}$***	Vapor Pressure (in. Hg @ °F) ***5.90 in Hg @ 68 °F***
Solubility ***Insoluble in water***	Molecular Weight (lb/lb-mole) ***86.1***
Absorptive Properties -	

Pollutant Emitted ***Naphthalene***	Chemical Abstract Services (CAS) Number ***91-20-3***
Proposed Emission Rate (lb/hr) ***$2.48x10^{-7}$***	Emission Source (describe) ***Process Point***
Source Classification (process point, process fugitive, area fugitive) ***Process Point***	Pollutant Class and Form (organic/inorganic - particulate/vapor) ***Organic /Vapor***
Concentration in Emission Stream (ppmv) ***$3.54x10^{-5}$***	Vapor Pressure (in. Hg @ °F) ***0.003 in Hg @ 77 °F***
Solubility ***In water 31 mg/L @ 77 °F***	Molecular Weight (lb/lb-mole) ***128.17***
Absorptive Properties -	

Pollutant Emitted ***Toluene***	Chemical Abstract Services (CAS) Number ***108-88-3***
Proposed Emission Rate (lb/hr) ***$1.36x10^{-6}$***	Emission Source (describe) ***Process Point***
Source Classification (process point, process fugitive, area fugitive) ***Process Point***	Pollutant Class and Form (organic/inorganic - particulate/vapor) ***Organic /Vapor***
Concentration in Emission Stream (ppmv) ***$2.71x10^{-4}$***	Vapor Pressure (in. Hg @ °F) ***1.12 in Hg @ 77°F***
Solubility ***In water 526 mg/L @ 77°F***	Molecular Weight (lb/lb-mole) ***92.14***
Absorptive Properties -	

Pollutant Emitted ***Xylene***	Chemical Abstract Services (CAS) Number ***95-47-6***
Proposed Emission Rate (lb/hr) ***$1.03x10^{-5}$***	Emission Source (describe) ***Process Point***
Source Classification (process point, process fugitive, area fugitive) ***Process Point***	Pollutant Class and Form (organic/inorganic - particulate/vapor) ***Organic /Vapor***
Concentration in Emission Stream (ppmv) ***$1.78x10^{-3}$***	Vapor Pressure (in. Hg @ °F) ***0.26 in Hg @ 77°F***
Solubility ***In water 178 mg/L @ 77°F***	Molecular Weight (lb/lb-mole) ***106.16***
Absorptive Properties -	

Pollutant Emitted ***PAH***	Chemical Abstract Services (CAS) Number ***N/A***
Proposed Emission Rate (lb/hr) ***$1.76x10^{-6}$***	Emission Source (describe) ***Process Point***
Source Classification (process point, process fugitive, area fugitive) ***Process Point***	Pollutant Class and Form (organic/inorganic - particulate/vapor) ***Organic /Vapor***
Concentration in Emission Stream (ppmv) ***$3.30x10^{-4}$***	Vapor Pressure (in. Hg @ °F) ***N/A***
Solubility ***N/A***	Molecular Weight (lb/lb-mole) ***TBD***
Absorptive Properties -	

Pollutant Emitted ***Antimony***	Chemical Abstract Services (CAS) Number ***7740-36-0***
Proposed Emission Rate (lb/hr) ***$8.58x10^{-7}$***	Emission Source (describe) ***Process Point***
Source Classification (process point, process fugitive, area fugitive) ***Process Point***	Pollutant Class and Form (organic/inorganic - particulate/vapor) ***Inorganic/particulate***
Concentration in Emission Stream (ppmv) ***$1.29x10^{-4}$***	Vapor Pressure (in. Hg @ °F) ***0 in Hg @ 77°F***
Solubility ***Insoluble in water***	Molecular Weight (lb/lb-mole) ***121.76***
Absorptive Properties -	

Pollutant Emitted ***Arsenic***	Chemical Abstract Services (CAS) Number ***7440-38-2***
Proposed Emission Rate (lb/hr) ***$3.30x10^{-7}$***	Emission Source (describe) ***Process Point***
Source Classification (process point, process fugitive, area fugitive) ***Process Point***	Pollutant Class and Form (organic/inorganic - particulate/vapor) ***Inorganic/Particulate***
Concentration in Emission Stream (ppmv) ***$8.08x10^{-5}$***	Vapor Pressure (in. Hg @ °F) ***0 in Hg @ 77°F***
Solubility ***Insoluble in water***	Molecular Weight (lb/lb-mole)
Absorptive Properties -	

Pollutant Emitted ***Beryllium***	Chemical Abstract Services (CAS) Number ***7440-41-7***
Proposed Emission Rate (lb/hr) ***$2.15x10^{-7}$***	Emission Source (describe) ***Process Point***
Source Classification (process point, process fugitive, area fugitive) ***Process Point***	Pollutant Class and Form (organic/inorganic - particulate/vapor) ***Inorganic/Particulate***
Concentration in Emission Stream (ppmv) ***$4.37x10^{-4}$***	Vapor Pressure (in. Hg @ °F) ***0 in Hg @ 77°F***
Solubility ***Insoluble in water***	Molecular Weight (lb/lb-mole) ***9.01***
Absorptive Properties -	

Pollutant Emitted ***Cadmium***	Chemical Abstract Services (CAS) Number ***7440-43-9***
Proposed Emission Rate (lb/hr) ***$1.82x10^{-6}$***	Emission Source (describe) ***Process Point***
Source Classification (process point, process fugitive, area fugitive) ***Process Point***	Pollutant Class and Form (organic/inorganic - particulate/vapor) ***Inorganic/Particulate***
Concentration in Emission Stream (ppmv) ***$2.96x10^{-4}$***	Vapor Pressure (in. Hg @ °F) ***0 in Hg@ 77°F***
Solubility ***Insoluble in water***	Molecular Weight (lb/lb-mole)
Absorptive Properties -	

Pollutant Emitted ***Chromium (hexavalent)***	Chemical Abstract Services (CAS) Number ***1333-82-0***
Proposed Emission Rate (lb/hr) ***$4.62x10^{-7}$***	Emission Source (describe) ***Process Point***
Source Classification (process point, process fugitive, area fugitive) ***Process Point***	Pollutant Class and Form (organic/inorganic - particulate/vapor) ***Inorganic/Particulate***
Concentration in Emission Stream (ppmv) ***$1.63x10^{-4}$***	Vapor Pressure (in. Hg @ °F) ***0 in Hg @77°F***
Solubility ***1,660 g/L in water @ 77°F***	Molecular Weight (lb/lb-mole) ***51.99***
Absorptive Properties -	

Pollutant Emitted ***Chromium***	Chemical Abstract Services (CAS) Number ***7440-47-3***
Proposed Emission Rate (lb/hr) ***$2.31x10^{-6}$***	Emission Source (describe) ***Process Point***
Source Classification (process point, process fugitive, area fugitive) ***Process Point***	Pollutant Class and Form (organic/inorganic - particulate/vapor) ***Inorganic/Particulate***
Concentration in Emission Stream (ppmv) ***$8.15x10^{-4}$***	Vapor Pressure (in. Hg @ °F) ***0 in Hg @ 77°F***
Solubility ***Insoluble in water***	Molecular Weight (lb/lb-mole) ***51.99***
Absorptive Properties -	

Pollutant Emitted ***Cobalt***	Chemical Abstract Services (CAS) Number ***7440-48-4***
Proposed Emission Rate (lb/hr) ***$1.35x10^{-7}$***	Emission Source (describe) ***Process Point***
Source Classification (process point, process fugitive, area fugitive) ***Process Point***	Pollutant Class and Form (organic/inorganic - particulate/vapor) ***Inorganic/Particulate***
Concentration in Emission Stream (ppmv) ***$4.21x10^{-5}$***	Vapor Pressure (in. Hg @ °F) ***0 in Hg @ 77°F***
Solubility ***Insoluble in water***	Molecular Weight (lb/lb-mole) ***58.93***
Absorptive Properties -	

Pollutant Emitted ***Manganese***	Chemical Abstract Services (CAS) Number
Proposed Emission Rate (lb/hr) ***$6.11x10^{-7}$***	Emission Source (describe) ***Process Point***
Source Classification (process point, process fugitive, area fugitive) ***Process Point***	Pollutant Class and Form (organic/inorganic - particulate/vapor) ***Inorganic/Particulate***
Concentration in Emission Stream (ppmv) ***$2.04x10^{-4}$***	Vapor Pressure (in. Hg @ °F) ***0 in Hg @ 77 °F***
Solubility ***Insoluble in water***	Molecular Weight (lb/lb-mole) ***54.94***
Absorptive Properties -	

Pollutant Emitted ***Mercury***	Chemical Abstract Services (CAS) Number ***7439-97-6***
Proposed Emission Rate (lb/hr) ***$4.13x10^{-7}$***	Emission Source (describe) ***Process Point***
Source Classification (process point, process fugitive, area fugitive) ***Process Point***	Pollutant Class and Form (organic/inorganic - particulate/vapor) ***Inorganic/Particulate***
Concentration in Emission Stream (ppmv) ***$3.77x10^{-5}$***	Vapor Pressure (in. Hg @ °F) ***$7.85x10^{-5}$ in Hg @ 77 °F***
Solubility ***Insoluble in water***	Molecular Weight (lb/lb-mole) ***200.59***
Absorptive Properties -	

Pollutant Emitted ***Nickel***	Chemical Abstract Services (CAS) Number ***7044-02-0***
Proposed Emission Rate (lb/hr) ***$3.47x10^{-6}$***	Emission Source (describe) ***Process Point***
Source Classification (process point, process fugitive, area fugitive) ***Process Point***	Pollutant Class and Form (organic/inorganic - particulate/vapor) ***Inorganic/Particulate***
Concentration in Emission Stream (ppmv) ***$1.08x10^{-3}$***	Vapor Pressure (in. Hg @ °F) ***0 in Hg Q 77°F***
Solubility ***Insoluble in water***	Molecular Weight (lb/lb-mole) ***58.69***
Absorptive Properties -	

Pollutant Emitted ***Selenium***	Chemical Abstract Services (CAS) Number ***7782-49-2***
Proposed Emission Rate (lb/hr) ***$1.45x10^{-6}$***	Emission Source (describe) ***Process Point***
Source Classification (process point, process fugitive, area fugitive) ***Process Point***	Pollutant Class and Form (organic/inorganic - particulate/vapor) ***Inorganic/Particulate***
Concentration in Emission Stream (ppmv) ***$3.37x10^{-4}$***	Vapor Pressure (in. Hg @ °F) ***0.29 in Hg @ 807***
Solubility ***Insoluble in water***	Molecular Weight (lb/lb-mole) ***78.96***
Absorptive Properties -	

Signature of Applicant	Date 09/26/2016

SEND COMPLETED APPLICATION AND ALL ATTACHMENTS TO:

North Dakota Department of
Health Division of Air Quality
918 E Divide Ave., 2nd Floor
Bismarck, ND 58501-1947
(701) 328-5188

PERMIT APPLICATION FOR
HAZARDOUS AIR POLLUTANT (HAP) SOURCES

NORTH DAKOTA DEPARTMENT OF HEALTH
DIVISION OF AIR QUALITY
SFN 8329 (09-12)

SECTION A1 - APPLICANT INFORMATION

Name of Firm or Organization ***Meridian Energy Group - Davis Refinery***		
Applicant's Name ***Tom Williams***		
Title ***VP of Planning &Permitting***	Telephone Number ***(707) 299-0182***	E-mail Address ***twilliams@meridianenergygroup.inc***
Mailing Address (Street & No.) ***2062 Business Center Drive, Suite 115***		
City ***Irvine***	State ***CA***	ZIP Code ***92612***

SECTION A2 - FACILITY INFORMATION

Contact Person for Air Pollution Matters ***Tom Johnson***		
Title ***Vice President of Operations***	Telephone Number ***(409)795-0792***	E-mail Address ***tjohnson@meridianenergygroup.inc***
Facility Address (Street & No. or Lat/Long to Nearest Second) ***37th Street / 46°52'45"N/103°14'55" W***		
City ***Belfield***	State ***ND***	ZIP Code ***58622***
County ***Billings***	Number of Employees at Location ***TBD***	
Land Area at Plant Site ***261*** Acres (or) Sq. Ft.	MSL Elevation at Plant ***2,685 feet***	

Describe Nature of Business/Process ***Petroleum Refining / Isomerization heater #2***

SECTION B – STACK DATA

Inside Diameter (ft) ***4.6***	Height Above Grade (ft) ***46.0***	
Gas Temperature at Exit (°F) ***787.7***	Gas Velocity at Exit (ft/sec) ***1.9***	Gas Volume (scfm) ***1,872.75***
Basis of any Estimates (attach separate sheet if necessary) ***Engineering data and Emission factors from Table 1.4-2. AP 42, Chapter 1: External Combustion Sources. See Document P-5715043-01-001-18042-I001 "EMISSIONS INVENTORY" and P-5715043-01-001-18035-I001 "BACT Analysis"***		
Are Emission Control Devices in Place? If YES – Complete SFN 8532		Yes ☐ No ☒
Nearest Residences or Building ***Utility building***	Distance (ft) ***947 ft***	Direction ***Southwest***
Nearest Property Line ***Fenceline***	Distance (ft) ***708 ft***	Direction ***East***

SECTION C – EMISSION STREAM DATA

Source ID No. From SFN 8516 ***117-H-1702***	Mean Particle Diameter (μm) ***TBD***
Flow Rate (scfm) ***1,872.75***	Drift Velocity (ft/sec) ***1.9***
Stream Temperature (°F) ***787.7***	Particulate Concentration (gr/dscf) ***TBD***
Moisture Content (%) ***TBD***	Halogens or Metals Present? ***Metals***
Pressure (in. Hg) ***TBD***	Organic Content (ppmv) $1.86x10^{-1}$
Heat Content (Btu/scfm) ***TBD***	O_2 Content (%) ***N/A***

SECTION D – POLLUTANT SPECIFIC DATA
(Complete One Box for Each Pollutant in Emission Stream)

Pollutant Emitted ***Acetaldehyde***	Chemical Abstract Services (CAS) Number ***75-07-0***
Proposed Emission Rate (lb/hr) $1.13x10^{-5}$	Emission Source (describe) ***Process Point***
Source Classification (process point, process fugitive, area fugitive) ***Process Point***	Pollutant Class and Form (organic/inorganic - particulate/vapor) ***Organic Vapor***
Concentration in Emission Stream (ppmv) $2.07x10^{-3}$	Vapor Pressure (in. Hg @ °F) ***35.51 in Hg @ 68°C***
Solubility $1x10^{+6}$ ***mg/L in water @ 77°F***	Molecular Weight (lb/lb-mole) ***44.05***
Absorptive Properties -	

Pollutant Emitted ***Benzene***	Chemical Abstract Services (CAS) Number ***71-43-2***
Proposed Emission Rate (lb/hr) $1.97x10^{-6}$	Emission Source (describe) ***Process Point***
Source Classification (process point, process fugitive, area fugitive) ***Process Point***	Pollutant Class and Form (organic/inorganic - particulate/vapor) ***Organic /Vapor***
Concentration in Emission Stream (ppmv) $2.04x10^{-4}$	Vapor Pressure (in. Hg @ °F) ***3.73 in Hg @ 77 °F***
Solubility ***In water*** $1.79x10^{3}$ ***mg/L @ 77 °F***	Molecular Weight (lb/lb-mole) ***78.11***
Absorptive Properties -	

Pollutant Emitted ***Dichlorobenzene***	Chemical Abstract Services (CAS) Number ***Varies***
Proposed Emission Rate (lb/hr) $1.13x10^{-6}$	Emission Source (describe) ***Process Point***
Source Classification (process point, process fugitive, area fugitive) ***Process Point***	Pollutant Class and Form (organic/inorganic - particulate/vapor) ***Organic /Vapor***
Concentration in Emission Stream (ppmv) $6.21x10^{-5}$	Vapor Pressure (in. Hg @ °F) ***Varies***
Solubility ***Varies***	Molecular Weight (lb/lb-mole) ***147.00***
Absorptive Properties -	

Pollutant Emitted ***Ethylbenzene***	Chemical Abstract Services (CAS) Number ***100-41-4***
Proposed Emission Rate (lb/hr) ***$1.50x10^{-5}$***	Emission Source (describe) ***Process Point***
Source Classification (process point, process fugitive, area fugitive) ***Process Point***	Pollutant Class and Form (organic/inorganic - particulate/vapor) ***Organic /Vapor***
Concentration in Emission Stream (ppmv) ***$1.15x10^{-3}$***	Vapor Pressure (in. Hg @ °F) ***0.37 in Hg @ 77°F***
Solubility ***In water 0.014 g/100mL @ 59 °F***	Molecular Weight (lb/lb-mole) ***106.17***
Absorptive Properties -	

Pollutant Emitted ***Formaldehyde***	Chemical Abstract Services (CAS) Number ***50-00-0***
Proposed Emission Rate (lb/hr) ***$6.94x10^{-5}$***	Emission Source (describe) ***Process Point***
Source Classification (process point, process fugitive, area fugitive) ***Process Point***	Pollutant Class and Form (organic/inorganic - particulate/vapor) ***Organic /Vapor***
Concentration in Emission Stream (ppmv) ***$1.87x10^{-2}$***	Vapor Pressure (in. Hg @ °F) ***0.15 in Hg @ 77 °F***
Solubility ***In water 4.00 $x10^{5}$ mg/L @ 68°F***	Molecular Weight (lb/lb-mole) ***30.03***
Absorptive Properties -	

Pollutant Emitted ***Hexane***	Chemical Abstract Services (CAS) Number ***110-54-5***
Proposed Emission Rate (lb/hr) ***$1.69x10^{-3}$***	Emission Source (describe) ***Process Point***
Source Classification (process point, process fugitive, area fugitive) ***Process Point***	Pollutant Class and Form (organic/inorganic - particulate/vapor) ***Organic /Vapor***
Concentration in Emission Stream (ppmv) ***$1.59x10^{-1}$***	Vapor Pressure (in. Hg @ °F) ***5.90 in Hg @ 68 °F***
Solubility ***Insoluble in water***	Molecular Weight (lb/lb-mole) ***86.1***
Absorptive Properties -	

Pollutant Emitted ***Naphthalene***	Chemical Abstract Services (CAS) Number ***91-20-3***
Proposed Emission Rate (lb/hr) ***$5.63x10^{-7}$***	Emission Source (describe) ***Process Point***
Source Classification (process point, process fugitive, area fugitive) ***Process Point***	Pollutant Class and Form (organic/inorganic - particulate/vapor) ***Organic /Vapor***
Concentration in Emission Stream (ppmv) ***$3.56x10^{-5}$***	Vapor Pressure (in. Hg @ °F) ***0.003 in Hg @ 77 °F***
Solubility ***In water 31 mg/L @ 77 °F***	Molecular Weight (lb/lb-mole) ***128.17***
Absorptive Properties -	

Pollutant Emitted ***Toluene***	Chemical Abstract Services (CAS) Number ***108-88-3***
Proposed Emission Rate (lb/hr) ***3.09 x10^{-6}***	Emission Source (describe) ***Process Point***
Source Classification (process point, process fugitive, area fugitive) ***Process Point***	Pollutant Class and Form (organic/inorganic - particulate/vapor) ***Organic /Vapor***
Concentration in Emission Stream (ppmv) ***2.72x10^{-4}***	Vapor Pressure (in. Hg @ °F) ***1.12 in Hg @ 77°F***
Solubility ***In water 526 mg/L @ 77°F***	Molecular Weight (lb/lb-mole) ***92.14***
Absorptive Properties -	

Pollutant Emitted ***Xylene***	Chemical Abstract Services (CAS) Number ***95-47-6***
Proposed Emission Rate (lb/hr) ***2.34x10^{-5}***	Emission Source (describe) ***Process Point***
Source Classification (process point, process fugitive, area fugitive) ***Process Point***	Pollutant Class and Form (organic/inorganic - particulate/vapor) ***Organic /Vapor***
Concentration in Emission Stream (ppmv) ***1.79x10^{-3}***	Vapor Pressure (in. Hg @ °F) ***0.26 in Hg @ 77°F***
Solubility ***In water 178 mg/L @ 77°F***	Molecular Weight (lb/lb-mole) ***106.16***
Absorptive Properties -	

Pollutant Emitted ***PAH***	Chemical Abstract Services (CAS) Number ***N/A***
Proposed Emission Rate (lb/hr) ***3.99x10^{-6}***	Emission Source (describe) ***Process Point***
Source Classification (process point, process fugitive, area fugitive) ***Process Point***	Pollutant Class and Form (organic/inorganic - particulate/vapor) ***Organic /Vapor***
Concentration in Emission Stream (ppmv) ***3.32x10^{-4}***	Vapor Pressure (in. Hg @ °F) ***N/A***
Solubility ***N/A***	Molecular Weight (lb/lb-mole) ***TBD***
Absorptive Properties -	

Pollutant Emitted ***Antimony***	Chemical Abstract Services (CAS) Number ***7740-36-0***
Proposed Emission Rate (lb/hr) ***1.95x10^{-6}***	Emission Source (describe) ***Process Point***
Source Classification (process point, process fugitive, area fugitive) ***Process Point***	Pollutant Class and Form (organic/inorganic - particulate/vapor) ***Inorganic/particulate***
Concentration in Emission Stream (ppmv) ***1.30x10^{-4}***	Vapor Pressure (in. Hg @ °F) ***0 in Hg @ 77°F***
Solubility ***Insoluble in water***	Molecular Weight (lb/lb-mole) ***121.76***
Absorptive Properties -	

Pollutant Emitted ***Arsenic***	Chemical Abstract Services (CAS) Number ***7440-38-2***
Proposed Emission Rate (lb/hr) ***$7.50x10^{-7}$***	Emission Source (describe) ***Process Point***
Source Classification (process point, process fugitive, area fugitive) ***Process Point***	Pollutant Class and Form (organic/inorganic - particulate/vapor) ***Inorganic/Particulate***
Concentration in Emission Stream (ppmv) ***$8.12x10^{-5}$***	Vapor Pressure (in. Hg @ °F) ***0 in Hg @ 77°F***
Solubility ***Insoluble in water***	Molecular Weight (lb/lb-mole)
Absorptive Properties -	

Pollutant Emitted ***Beryllium***	Chemical Abstract Services (CAS) Number ***7440-41-7***
Proposed Emission Rate (lb/hr) ***$4.88x10^{-7}$***	Emission Source (describe) ***Process Point***
Source Classification (process point, process fugitive, area fugitive) ***Process Point***	Pollutant Class and Form (organic/inorganic - particulate/vapor) ***Inorganic/Particulate***
Concentration in Emission Stream (ppmv) ***$4.39x10^{-4}$***	Vapor Pressure (in. Hg @ °F) ***0 in Hg @ 77°F***
Solubility ***Insoluble in water***	Molecular Weight (lb/lb-mole) ***9.01***
Absorptive Properties -	

Pollutant Emitted ***Cadmium***	Chemical Abstract Services (CAS) Number ***7440-43-9***
Proposed Emission Rate (lb/hr) ***$4.13x10^{-6}$***	Emission Source (describe) ***Process Point***
Source Classification (process point, process fugitive, area fugitive) ***Process Point***	Pollutant Class and Form (organic/inorganic - particulate/vapor) ***Inorganic/Particulate***
Concentration in Emission Stream (ppmv) ***$2.98x10^{-4}$***	Vapor Pressure (in. Hg @ °F) ***0 in Hg@ 77°F***
Solubility ***Insoluble in water***	Molecular Weight (lb/lb-mole)
Absorptive Properties -	

Pollutant Emitted ***Chromium (hexavalent)***	Chemical Abstract Services (CAS) Number ***1333-82-0***
Proposed Emission Rate (lb/hr) ***$1.05x10^{-6}$***	Emission Source (describe) ***Process Point***
Source Classification (process point, process fugitive, area fugitive) ***Process Point***	Pollutant Class and Form (organic/inorganic - particulate/vapor) ***Inorganic/Particulate***
Concentration in Emission Stream (ppmv) ***$1.64x10^{-4}$***	Vapor Pressure (in. Hg @ °F) ***0 in Hg @77°F***
Solubility ***1,660 g/L in water @ 77°F***	Molecular Weight (lb/lb-mole) ***51.99***
Absorptive Properties -	

Pollutant Emitted ***Chromium***	Chemical Abstract Services (CAS) Number ***7440-47-3***
Proposed Emission Rate (lb/hr) ***$5.25x10^{-6}$***	Emission Source (describe) ***Process Point***
Source Classification (process point, process fugitive, area fugitive) ***Process Point***	Pollutant Class and Form (organic/inorganic - particulate/vapor) ***Inorganic/Particulate***
Concentration in Emission Stream (ppmv) ***$8.19x10^{-4}$***	Vapor Pressure (in. Hg @ °F) ***0 in Hg @ 77°F***
Solubility ***Insoluble in water***	Molecular Weight (lb/lb-mole) ***51.99***
Absorptive Properties -	

Pollutant Emitted ***Cobalt***	Chemical Abstract Services (CAS) Number ***7440-48-4***
Proposed Emission Rate (lb/hr) ***$3.08x10^{-7}$***	Emission Source (describe) ***Process Point***
Source Classification (process point, process fugitive, area fugitive) ***Process Point***	Pollutant Class and Form (organic/inorganic - particulate/vapor) ***Inorganic/Particulate***
Concentration in Emission Stream (ppmv) ***$4.23x10^{-5}$***	Vapor Pressure (in. Hg @ °F) ***0 in Hg @ 77°F***
Solubility ***Insoluble in water***	Molecular Weight (lb/lb-mole) ***58.93***
Absorptive Properties -	

Pollutant Emitted ***Manganese***	Chemical Abstract Services (CAS) Number
Proposed Emission Rate (lb/hr) ***$1.39x10^{-6}$***	Emission Source (describe) ***Process Point***
Source Classification (process point, process fugitive, area fugitive) ***Process Point***	Pollutant Class and Form (organic/inorganic - particulate/vapor) ***Inorganic/Particulate***
Concentration in Emission Stream (ppmv) ***$2.05x10^{-4}$***	Vapor Pressure (in. Hg @ °F) ***0 in Hg @ 77 °F***
Solubility ***Insoluble in water***	Molecular Weight (lb/lb-mole) ***54.94***
Absorptive Properties -	

Pollutant Emitted ***Mercury***	Chemical Abstract Services (CAS) Number ***7439-97-6***
Proposed Emission Rate (lb/hr) ***$9.38x10^{-7}$***	Emission Source (describe) ***Process Point***
Source Classification (process point, process fugitive, area fugitive) ***Process Point***	Pollutant Class and Form (organic/inorganic - particulate/vapor) ***Inorganic/Particulate***
Concentration in Emission Stream (ppmv) ***$3.79x10^{-5}$***	Vapor Pressure (in. Hg @ °F) ***$7.85x10^{-5}$ in Hg @ 77 °F***
Solubility ***Insoluble in water***	Molecular Weight (lb/lb-mole) ***200.59***
Absorptive Properties -	

Pollutant Emitted ***Nickel***	Chemical Abstract Services (CAS) Number ***7044-02-0***
Proposed Emission Rate (lb/hr) ***$7.88x10^{-6}$***	Emission Source (describe) ***Process Point***
Source Classification (process point, process fugitive, area fugitive) ***Process Point***	Pollutant Class and Form (organic/inorganic - particulate/vapor) ***Inorganic/Particulate***
Concentration in Emission Stream (ppmv) ***$1.09x10^{-3}$***	Vapor Pressure (in. Hg @ °F) ***0 in Hg Q 77°F***
Solubility ***Insoluble in water***	Molecular Weight (lb/lb-mole) ***58.69***
Absorptive Properties -	

Pollutant Emitted ***Selenium***	Chemical Abstract Services (CAS) Number ***7782-49-2***
Proposed Emission Rate (lb/hr) ***$3.30x10^{-6}$***	Emission Source (describe) ***Process Point***
Source Classification (process point, process fugitive, area fugitive) ***Process Point***	Pollutant Class and Form (organic/inorganic - particulate/vapor) ***Inorganic/Particulate***
Concentration in Emission Stream (ppmv) ***$3.39x10^{-4}$***	Vapor Pressure (in. Hg @ °F) ***0.29 in Hg @ 807***
Solubility ***Insoluble in water***	Molecular Weight (lb/lb-mole) ***78.96***
Absorptive Properties -	

Signature of Applicant	Date 09/26/2016

SEND COMPLETED APPLICATION AND ALL ATTACHMENTS TO:

North Dakota Department of
Health Division of Air Quality
918 E Divide Ave., 2nd Floor
Bismarck, ND 58501-1947
(701) 328-5188

PERMIT APPLICATION FOR
HAZARDOUS AIR POLLUTANT (HAP) SOURCES

NORTH DAKOTA DEPARTMENT OF HEALTH
DIVISION OF AIR QUALITY
SFN 8329 (09-12)

SECTION A1 - APPLICANT INFORMATION

Name of Firm or Organization ***Meridian Energy Group - Davis Refinery***		
Applicant's Name ***Tom Williams***		
Title ***VP of Planning &Permitting***	Telephone Number ***(707) 299-0182***	E-mail Address ***twilliams@meridianenergygroup.inc***
Mailing Address (Street & No.) ***2062 Business Center Drive, Suite 115***		
City ***Irvine***	State ***CA***	ZIP Code ***92612***

SECTION A2 - FACILITY INFORMATION

Contact Person for Air Pollution Matters ***Tom Johnson***		
Title ***Vice President of Operations***	Telephone Number ***(409)795-0792***	E-mail Address ***tjohnson@meridianenergygroup.inc***
Facility Address (Street & No. or Lat/Long to Nearest Second) ***37th Street / 46°52'45"N/103°14'55" W***		
City ***Belfield***	State ***ND***	ZIP Code ***58622***
County ***Billings***	Number of Employees at Location ***TBD***	
Land Area at Plant Site ***261*** Acres (or) Sq. Ft.	MSL Elevation at Plant ***2,685 feet***	

Describe Nature of Business/Process ***Petroleum Refining / Alkylation Unit / Iso-Stripper Reboiler***

SECTION B – STACK DATA

Inside Diameter (ft) ***4.0***	Height Above Grade (ft) ***95.0***	
Gas Temperature at Exit (°F) ***785.5***	Gas Velocity at Exit (ft/sec) ***22.4***	Gas Volume (scfm) ***16,894.20***
Basis of any Estimates (attach separate sheet if necessary) ***Engineering data and Emission factors from Table 1.4-2. AP 42, Chapter 1: External Combustion Sources. See Document P-5715043-01-001-18042-I001 "EMISSIONS INVENTORY" and P-5715043-01-001-18035-I001 "BACT Analysis"***		
Are Emission Control Devices in Place? If YES – Complete SFN 8532		Yes ☒ No ☐
Nearest Residences or Building ***Utility building***	Distance (ft) ***1,091 ft***	Direction ***Southwest***
Nearest Property Line ***Fenceline***	Distance (ft) ***536 ft***	Direction ***East***

SECTION C – EMISSION STREAM DATA

Source ID No. From SFN 8516 ***118-H-1801***	Mean Particle Diameter (μm) ***TBD***
Flow Rate (scfm) ***16,894.20***	Drift Velocity (ft/sec) ***22.4***
Stream Temperature (°F) ***785.5***	Particulate Concentration (gr/dscf) ***TBD***
Moisture Content (%) ***TBD***	Halogens or Metals Present? ***Metals***
Pressure (in. Hg) ***TBD***	Organic Content (ppmv) ***$9.22x10^{-1}$***
Heat Content (Btu/scfm) ***TBD***	O_2 Content (%) ***N/A***

SECTION D – POLLUTANT SPECIFIC DATA
(Complete One Box for Each Pollutant in Emission Stream)

Pollutant Emitted ***Acetaldehyde***	Chemical Abstract Services (CAS) Number ***75-07-0***
Proposed Emission Rate (lb/hr) ***$2.53x10^{-4}$***	Emission Source (describe) ***Process Point***
Source Classification (process point, process fugitive, area fugitive) ***Process Point***	Pollutant Class and Form (organic/inorganic - particulate/vapor) ***Organic Vapor***
Concentration in Emission Stream (ppmv) ***$5.15x10^{-3}$***	Vapor Pressure (in. Hg @ °F) ***35.51 in Hg @ 68°C***
Solubility ***$1x10^{+6}$ mg/L in water @ 77°F***	Molecular Weight (lb/lb-mole) ***44.05***
Absorptive Properties -	

Pollutant Emitted ***Benzene***	Chemical Abstract Services (CAS) Number ***71-43-2***
Proposed Emission Rate (lb/hr) ***$4.42x10^{-5}$***	Emission Source (describe) ***Process Point***
Source Classification (process point, process fugitive, area fugitive) ***Process Point***	Pollutant Class and Form (organic/inorganic - particulate/vapor) ***Organic /Vapor***
Concentration in Emission Stream (ppmv) ***$5.08x10^{-4}$***	Vapor Pressure (in. Hg @ °F) ***3.73 in Hg @ 77 °F***
Solubility ***In water $1.79x10^{3}$ mg/L @ 77 °F***	Molecular Weight (lb/lb-mole) ***78.11***
Absorptive Properties -	

Pollutant Emitted ***Dichlorobenzene***	Chemical Abstract Services (CAS) Number ***Varies***
Proposed Emission Rate (lb/hr) ***$2.53x10^{-5}$***	Emission Source (describe) ***Process Point***
Source Classification (process point, process fugitive, area fugitive) ***Process Point***	Pollutant Class and Form (organic/inorganic - particulate/vapor) ***Organic /Vapor***
Concentration in Emission Stream (ppmv) ***$1.54x10^{-4}$***	Vapor Pressure (in. Hg @ °F) ***Varies***
Solubility ***Varies***	Molecular Weight (lb/lb-mole) ***147.00***
Absorptive Properties -	

Pollutant Emitted ***Ethylbenzene***	Chemical Abstract Services (CAS) Number ***100-41-4***
Proposed Emission Rate (lb/hr) ***$3.37x10^{-4}$***	Emission Source (describe) ***Process Point***
Source Classification (process point, process fugitive, area fugitive) ***Process Point***	Pollutant Class and Form (organic/inorganic - particulate/vapor) ***Organic /Vapor***
Concentration in Emission Stream (ppmv) ***$2.85x10^{-3}$***	Vapor Pressure (in. Hg @ °F) ***0.37 in Hg @ 77°F***
Solubility ***In water 0.014 g/100mL @ 59 °F***	Molecular Weight (lb/lb-mole) ***106.17***
Absorptive Properties -	

Pollutant Emitted ***Formaldehyde***	Chemical Abstract Services (CAS) Number ***50-00-0***
Proposed Emission Rate (lb/hr) ***$1.56x10^{-3}$***	Emission Source (describe) ***Process Point***
Source Classification (process point, process fugitive, area fugitive) ***Process Point***	Pollutant Class and Form (organic/inorganic - particulate/vapor) ***Organic /Vapor***
Concentration in Emission Stream (ppmv) ***$4.66x10^{-2}$***	Vapor Pressure (in. Hg @ °F) ***0.15 in Hg @ 77 °F***
Solubility ***In water 4.00 $x10^{5}$ mg/L @ 68°F***	Molecular Weight (lb/lb-mole) ***30.03***
Absorptive Properties -	

Pollutant Emitted ***Hexane***	Chemical Abstract Services (CAS) Number ***110-54-5***
Proposed Emission Rate (lb/hr) ***$3.79x10^{-2}$***	Emission Source (describe) ***Process Point***
Source Classification (process point, process fugitive, area fugitive) ***Process Point***	Pollutant Class and Form (organic/inorganic - particulate/vapor) ***Organic /Vapor***
Concentration in Emission Stream (ppmv) ***$3.95x10^{-1}$***	Vapor Pressure (in. Hg @ °F) ***5.90 in Hg @ 68 °F***
Solubility ***Insoluble in water***	Molecular Weight (lb/lb-mole) ***86.1***
Absorptive Properties -	

Pollutant Emitted ***Naphthalene***	Chemical Abstract Services (CAS) Number ***91-20-3***
Proposed Emission Rate (lb/hr) ***$1.26x10^{-5}$***	Emission Source (describe) ***Process Point***
Source Classification (process point, process fugitive, area fugitive) ***Process Point***	Pollutant Class and Form (organic/inorganic - particulate/vapor) ***Organic /Vapor***
Concentration in Emission Stream (ppmv) ***$8.85x10^{-5}$***	Vapor Pressure (in. Hg @ °F) ***0.003 in Hg @ 77 °F***
Solubility ***In water 31 mg/L @ 77 °F***	Molecular Weight (lb/lb-mole) ***128.17***
Absorptive Properties -	

Pollutant Emitted ***Toluene***	Chemical Abstract Services (CAS) Number ***108-88-3***
Proposed Emission Rate (lb/hr) ***$6.95x10^{-5}$***	Emission Source (describe) ***Process Point***
Source Classification (process point, process fugitive, area fugitive) ***Process Point***	Pollutant Class and Form (organic/inorganic - particulate/vapor) ***Organic /Vapor***
Concentration in Emission Stream (ppmv) ***$6.77x10^{-4}$***	Vapor Pressure (in. Hg @ °F) ***1.12 in Hg @ 77°F***
Solubility ***In water 526 mg/L @ 77°F***	Molecular Weight (lb/lb-mole) ***92.14***
Absorptive Properties -	

Pollutant Emitted ***Xylene***	Chemical Abstract Services (CAS) Number ***95-47-6***
Proposed Emission Rate (lb/hr) ***$5.26x10^{-4}$***	Emission Source (describe) ***Process Point***
Source Classification (process point, process fugitive, area fugitive) ***Process Point***	Pollutant Class and Form (organic/inorganic - particulate/vapor) ***Organic /Vapor***
Concentration in Emission Stream (ppmv) ***$4.45x10^{-3}$***	Vapor Pressure (in. Hg @ °F) ***0.26 in Hg @ 77°F***
Solubility ***In water 178 mg/L @ 77°F***	Molecular Weight (lb/lb-mole) ***106.16***
Absorptive Properties -	

Pollutant Emitted ***PAH***	Chemical Abstract Services (CAS) Number ***N/A***
Proposed Emission Rate (lb/hr) ***$8.96x10^{-5}$***	Emission Source (describe) ***Process Point***
Source Classification (process point, process fugitive, area fugitive) ***Process Point***	Pollutant Class and Form (organic/inorganic - particulate/vapor) ***Organic /Vapor***
Concentration in Emission Stream (ppmv) ***$8.25x10^{-4}$***	Vapor Pressure (in. Hg @ °F) ***N/A***
Solubility ***N/A***	Molecular Weight (lb/lb-mole) ***TBD***
Absorptive Properties -	

Pollutant Emitted ***Antimony***	Chemical Abstract Services (CAS) Number ***7740-36-0***
Proposed Emission Rate (lb/hr) ***$4.38x10^{-5}$***	Emission Source (describe) ***Process Point***
Source Classification (process point, process fugitive, area fugitive) ***Process Point***	Pollutant Class and Form (organic/inorganic - particulate/vapor) ***Inorganic/particulate***
Concentration in Emission Stream (ppmv) ***$3.23x10^{-4}$***	Vapor Pressure (in. Hg @ °F) ***0 in Hg @ 77°F***
Solubility ***Insoluble in water***	Molecular Weight (lb/lb-mole) ***121.76***
Absorptive Properties -	

Pollutant Emitted ***Arsenic***	Chemical Abstract Services (CAS) Number ***7440-38-2***
Proposed Emission Rate (lb/hr) ***$1.68x10^{-5}$***	Emission Source (describe) ***Process Point***
Source Classification (process point, process fugitive, area fugitive) ***Process Point***	Pollutant Class and Form (organic/inorganic - particulate/vapor) ***Inorganic/Particulate***
Concentration in Emission Stream (ppmv) ***$2.02x10^{-4}$***	Vapor Pressure (in. Hg @ °F) ***0 in Hg @ 77°F***
Solubility ***Insoluble in water***	Molecular Weight (lb/lb-mole)
Absorptive Properties -	

Pollutant Emitted ***Beryllium***	Chemical Abstract Services (CAS) Number ***7440-41-7***
Proposed Emission Rate (lb/hr) ***$1.09x10^{-5}$***	Emission Source (describe) ***Process Point***
Source Classification (process point, process fugitive, area fugitive) ***Process Point***	Pollutant Class and Form (organic/inorganic - particulate/vapor) ***Inorganic/Particulate***
Concentration in Emission Stream (ppmv) ***$1.09x10^{-3}$***	Vapor Pressure (in. Hg @ °F) ***0 in Hg @ 77°F***
Solubility ***Insoluble in water***	Molecular Weight (lb/lb-mole) ***9.01***
Absorptive Properties -	

Pollutant Emitted ***Cadmium***	Chemical Abstract Services (CAS) Number ***7440-43-9***
Proposed Emission Rate (lb/hr) ***$9.26x10^{-5}$***	Emission Source (describe) ***Process Point***
Source Classification (process point, process fugitive, area fugitive) ***Process Point***	Pollutant Class and Form (organic/inorganic - particulate/vapor) ***Inorganic/Particulate***
Concentration in Emission Stream (ppmv) ***$7.40x10^{-4}$***	Vapor Pressure (in. Hg @ °F) ***0 in Hg@ 77°F***
Solubility ***Insoluble in water***	Molecular Weight (lb/lb-mole)
Absorptive Properties -	

Pollutant Emitted ***Chromium (hexavalent)***	Chemical Abstract Services (CAS) Number ***1333-82-0***
Proposed Emission Rate (lb/hr) ***$2.36x10^{-5}$***	Emission Source (describe) ***Process Point***
Source Classification (process point, process fugitive, area fugitive) ***Process Point***	Pollutant Class and Form (organic/inorganic - particulate/vapor) ***Inorganic/Particulate***
Concentration in Emission Stream (ppmv) ***$4.07x10^{-4}$***	Vapor Pressure (in. Hg @ °F) ***0 in Hg @77°F***
Solubility ***1,660 g/L in water @ 77°F***	Molecular Weight (lb/lb-mole) ***51.99***
Absorptive Properties -	

Pollutant Emitted ***Chromium***	Chemical Abstract Services (CAS) Number ***7440-47-3***
Proposed Emission Rate (lb/hr) ***$1.18x10^{-4}$***	Emission Source (describe) ***Process Point***
Source Classification (process point, process fugitive, area fugitive) ***Process Point***	Pollutant Class and Form (organic/inorganic - particulate/vapor) ***Inorganic/Particulate***
Concentration in Emission Stream (ppmv) ***$2.04x10^{-3}$***	Vapor Pressure (in. Hg @ °F) ***0 in Hg @ 77°F***
Solubility ***Insoluble in water***	Molecular Weight (lb/lb-mole) ***51.99***
Absorptive Properties -	

Pollutant Emitted ***Cobalt***	Chemical Abstract Services (CAS) Number ***7440-48-4***
Proposed Emission Rate (lb/hr) ***$6.90x10^{-6}$***	Emission Source (describe) ***Process Point***
Source Classification (process point, process fugitive, area fugitive) ***Process Point***	Pollutant Class and Form (organic/inorganic - particulate/vapor) ***Inorganic/Particulate***
Concentration in Emission Stream (ppmv) ***$1.05x10^{-4}$***	Vapor Pressure (in. Hg @ °F) ***0 in Hg @ 77°F***
Solubility ***Insoluble in water***	Molecular Weight (lb/lb-mole) ***58.93***
Absorptive Properties -	

Pollutant Emitted ***Manganese***	Chemical Abstract Services (CAS) Number
Proposed Emission Rate (lb/hr) ***$3.12x10^{-5}$***	Emission Source (describe) ***Process Point***
Source Classification (process point, process fugitive, area fugitive) ***Process Point***	Pollutant Class and Form (organic/inorganic - particulate/vapor) ***Inorganic/Particulate***
Concentration in Emission Stream (ppmv) ***$5.09x10^{-4}$***	Vapor Pressure (in. Hg @ °F) ***0 in Hg @ 77 °F***
Solubility ***Insoluble in water***	Molecular Weight (lb/lb-mole) ***54.94***
Absorptive Properties -	

Pollutant Emitted ***Mercury***	Chemical Abstract Services (CAS) Number ***7439-97-6***
Proposed Emission Rate (lb/hr) ***$2.10x10^{-5}$***	Emission Source (describe) ***Process Point***
Source Classification (process point, process fugitive, area fugitive) ***Process Point***	Pollutant Class and Form (organic/inorganic - particulate/vapor) ***Inorganic/Particulate***
Concentration in Emission Stream (ppmv) ***$9.42x10^{-5}$***	Vapor Pressure (in. Hg @ °F) ***$7.85x10^{-5}$ in Hg @ 77 °F***
Solubility ***Insoluble in water***	Molecular Weight (lb/lb-mole) ***200.59***
Absorptive Properties -	

Pollutant Emitted ***Nickel***	Chemical Abstract Services (CAS) Number ***7044-02-0***
Proposed Emission Rate (lb/hr) ***$1.77x10^{-4}$***	Emission Source (describe) ***Process Point***
Source Classification (process point, process fugitive, area fugitive) ***Process Point***	Pollutant Class and Form (organic/inorganic - particulate/vapor) ***Inorganic/Particulate***
Concentration in Emission Stream (ppmv) ***$2.70x10^{-3}$***	Vapor Pressure (in. Hg @ °F) ***0 in Hg Q 77°F***
Solubility ***Insoluble in water***	Molecular Weight (lb/lb-mole) ***58.69***
Absorptive Properties -	

Pollutant Emitted ***Selenium***	Chemical Abstract Services (CAS) Number ***7782-49-2***
Proposed Emission Rate (lb/hr) ***$7.41x10^{-5}$***	Emission Source (describe) ***Process Point***
Source Classification (process point, process fugitive, area fugitive) ***Process Point***	Pollutant Class and Form (organic/inorganic - particulate/vapor) ***Inorganic/Particulate***
Concentration in Emission Stream (ppmv) ***$8.42x10^{-4}$***	Vapor Pressure (in. Hg @ °F) ***0.29 in Hg @ 807***
Solubility ***Insoluble in water***	Molecular Weight (lb/lb-mole) ***78.96***
Absorptive Properties -	

Signature of Applicant	Date 09/26/2016

SEND COMPLETED APPLICATION AND ALL ATTACHMENTS TO:

North Dakota Department of
Health Division of Air Quality
918 E Divide Ave., 2nd Floor
Bismarck, ND 58501-1947
(701) 328-5188

PERMIT APPLICATION FOR
HAZARDOUS AIR POLLUTANT (HAP) SOURCES

NORTH DAKOTA DEPARTMENT OF HEALTH
DIVISION OF AIR QUALITY
SFN 8329 (09-12)

SECTION A1 - APPLICANT INFORMATION

Name of Firm or Organization ***Meridian Energy Group - Davis Refinery***		
Applicant's Name ***Tom Williams***		
Title ***VP of Planning &Permitting***	Telephone Number ***(707) 299-0182***	E-mail Address ***twilliams@meridianenergygroup.inc***
Mailing Address (Street & No.) ***2062 Business Center Drive, Suite 115***		
City ***Irvine***	State ***CA***	ZIP Code ***92612***

SECTION A2 - FACILITY INFORMATION

Contact Person for Air Pollution Matters ***Tom Johnson***		
Title ***Vice President of Operations***	Telephone Number ***(409)795-0792***	E-mail Address ***tjohnson@meridianenergygroup.inc***
Facility Address (Street & No. or Lat/Long to Nearest Second) ***37th Street / 46°52'45"N/103°14'55" W***		
City ***Belfield***	State ***ND***	ZIP Code ***58622***
County ***Billings***	Number of Employees at Location ***TBD***	
Land Area at Plant Site ***261*** Acres (or) Sq. Ft.	MSL Elevation at Plant ***2,685 feet***	

Describe Nature of Business/Process

Petroleum Refining / Kero Hydrotreater / Heater

SECTION B – STACK DATA

Inside Diameter (ft) ***2.5***	Height Above Grade (ft) ***96.0***	
Gas Temperature at Exit (°F) ***764.3***	Gas Velocity at Exit (ft/sec) ***21.9***	Gas Volume (scfm) ***6,224.68***
Basis of any Estimates (attach separate sheet if necessary) ***Engineering data and Emission factors from Table 1.4-2. AP 42, Chapter 1: External Combustion Sources. See Document P-5715043-01-001-18042-I001 "EMISSIONS INVENTORY" and P-5715043-01-001-18035-I001 "BACT Analysis"***		
Are Emission Control Devices in Place? If YES – Complete SFN 8532		Yes ☐ No ☒
Nearest Residences or Building ***Utility building***	Distance (ft) ***778 ft***	Direction ***South***
Nearest Property Line ***Fenceline***	Distance (ft) ***970 ft***	Direction ***Southwest***

SECTION C – EMISSION STREAM DATA

Source ID No. From SFN 8516 ***125-H-2501***	Mean Particle Diameter (μm) ***TBD***
Flow Rate (scfm) ***6,224.68***	Drift Velocity (ft/sec) ***21.9***
Stream Temperature (°F) ***764.3***	Particulate Concentration (gr/dscf) ***TBD***
Moisture Content (%) ***TBD***	Halogens or Metals Present? ***Metals***
Pressure (in. Hg) ***TBD***	Organic Content (ppmv) $3.65x10^{-1}$
Heat Content (Btu/scfm) ***TBD***	O_2 Content (%) ***N/A***

SECTION D – POLLUTANT SPECIFIC DATA
(Complete One Box for Each Pollutant in Emission Stream)

Pollutant Emitted ***Acetaldehyde***	Chemical Abstract Services (CAS) Number ***75-07-0***
Proposed Emission Rate (lb/hr) $3.75x10^{-5}$	Emission Source (describe) ***Process Point***
Source Classification (process point, process fugitive, area fugitive) ***Process Point***	Pollutant Class and Form (organic/inorganic - particulate/vapor) ***Organic Vapor***
Concentration in Emission Stream (ppmv) $2.04x10^{-3}$	Vapor Pressure (in. Hg @ °F) ***35.51 in Hg @ 68°C***
Solubility $1x10^{+6}$ ***mg/L in water @ 77°F***	Molecular Weight (lb/lb-mole) ***44.05***
Absorptive Properties -	

Pollutant Emitted ***Benzene***	Chemical Abstract Services (CAS) Number ***71-43-2***
Proposed Emission Rate (lb/hr) $6.56x10^{-6}$	Emission Source (describe) ***Process Point***
Source Classification (process point, process fugitive, area fugitive) ***Process Point***	Pollutant Class and Form (organic/inorganic - particulate/vapor) ***Organic /Vapor***
Concentration in Emission Stream (ppmv) $2.01x10^{-4}$	Vapor Pressure (in. Hg @ °F) ***3.73 in Hg @ 77 °F***
Solubility ***In water*** $1.79x10^{3}$ ***mg/L @ 77 °F***	Molecular Weight (lb/lb-mole) ***78.11***
Absorptive Properties -	

Pollutant Emitted ***Dichlorobenzene***	Chemical Abstract Services (CAS) Number ***Varies***
Proposed Emission Rate (lb/hr) $3.75x10^{-6}$	Emission Source (describe) ***Process Point***
Source Classification (process point, process fugitive, area fugitive) ***Process Point***	Pollutant Class and Form (organic/inorganic - particulate/vapor) ***Organic /Vapor***
Concentration in Emission Stream (ppmv) $6.11x10^{-5}$	Vapor Pressure (in. Hg @ °F) ***Varies***
Solubility ***Varies***	Molecular Weight (lb/lb-mole) ***147.00***
Absorptive Properties -	

Pollutant Emitted ***Ethylbenzene***	Chemical Abstract Services (CAS) Number ***100-41-4***
Proposed Emission Rate (lb/hr) ***$5.00x10^{-5}$***	Emission Source (describe) ***Process Point***
Source Classification (process point, process fugitive, area fugitive) ***Process Point***	Pollutant Class and Form (organic/inorganic - particulate/vapor) ***Organic /Vapor***
Concentration in Emission Stream (ppmv) ***$1.13x10^{-3}$***	Vapor Pressure (in. Hg @ °F) ***0.37 in Hg @ 77°F***
Solubility ***In water 0.014 g/100mL @ 59 °F***	Molecular Weight (lb/lb-mole) ***106.17***
Absorptive Properties -	

Pollutant Emitted ***Formaldehyde***	Chemical Abstract Services (CAS) Number ***50-00-0***
Proposed Emission Rate (lb/hr) ***$2.31x10^{-4}$***	Emission Source (describe) ***Process Point***
Source Classification (process point, process fugitive, area fugitive) ***Process Point***	Pollutant Class and Form (organic/inorganic - particulate/vapor) ***Organic /Vapor***
Concentration in Emission Stream (ppmv) ***$1.84x10^{-2}$***	Vapor Pressure (in. Hg @ °F) ***0.15 in Hg @ 77 °F***
Solubility ***In water 4.00 $x10^{5}$ mg/L @ 68°F***	Molecular Weight (lb/lb-mole) ***30.03***
Absorptive Properties -	

Pollutant Emitted ***Hexane***	Chemical Abstract Services (CAS) Number ***110-54-5***
Proposed Emission Rate (lb/hr) ***$5.63x10^{-3}$***	Emission Source (describe) ***Process Point***
Source Classification (process point, process fugitive, area fugitive) ***Process Point***	Pollutant Class and Form (organic/inorganic - particulate/vapor) ***Organic /Vapor***
Concentration in Emission Stream (ppmv) ***$1.56x10^{-1}$***	Vapor Pressure (in. Hg @ °F) ***5.90 in Hg @ 68 °F***
Solubility ***Insoluble in water***	Molecular Weight (lb/lb-mole) ***86.1***
Absorptive Properties -	

Pollutant Emitted ***Naphthalene***	Chemical Abstract Services (CAS) Number ***91-20-3***
Proposed Emission Rate (lb/hr) ***$1.88x10^{-6}$***	Emission Source (describe) ***Process Point***
Source Classification (process point, process fugitive, area fugitive) ***Process Point***	Pollutant Class and Form (organic/inorganic - particulate/vapor) ***Organic /Vapor***
Concentration in Emission Stream (ppmv) ***$3.50x10^{-5}$***	Vapor Pressure (in. Hg @ °F) ***0.003 in Hg @ 77 °F***
Solubility ***In water 31 mg/L @ 77 °F***	Molecular Weight (lb/lb-mole) ***128.17***
Absorptive Properties -	

Pollutant Emitted ***Toluene***	Chemical Abstract Services (CAS) Number ***108-88-3***
Proposed Emission Rate (lb/hr) ***$1.03x10^{-5}$***	Emission Source (describe) ***Process Point***
Source Classification (process point, process fugitive, area fugitive) ***Process Point***	Pollutant Class and Form (organic/inorganic - particulate/vapor) ***Organic /Vapor***
Concentration in Emission Stream (ppmv) ***$2.86x10^{-4}$***	Vapor Pressure (in. Hg @ °F) ***1.12 in Hg @ 77°F***
Solubility ***In water 526 mg/L @ 77°F***	Molecular Weight (lb/lb-mole) ***92.14***
Absorptive Properties -	

Pollutant Emitted ***Xylene***	Chemical Abstract Services (CAS) Number ***95-47-6***
Proposed Emission Rate (lb/hr) ***$7.81x10^{-5}$***	Emission Source (describe) ***Process Point***
Source Classification (process point, process fugitive, area fugitive) ***Process Point***	Pollutant Class and Form (organic/inorganic - particulate/vapor) ***Organic /Vapor***
Concentration in Emission Stream (ppmv) ***$1.76x10^{-3}$***	Vapor Pressure (in. Hg @ °F) ***0.26 in Hg @ 77°F***
Solubility ***In water 178 mg/L @ 77°F***	Molecular Weight (lb/lb-mole) ***106.16***
Absorptive Properties -	

Pollutant Emitted ***PAH***	Chemical Abstract Services (CAS) Number ***N/A***
Proposed Emission Rate (lb/hr) ***$1.33x10^{-5}$***	Emission Source (describe) ***Process Point***
Source Classification (process point, process fugitive, area fugitive) ***Process Point***	Pollutant Class and Form (organic/inorganic - particulate/vapor) ***Organic /Vapor***
Concentration in Emission Stream (ppmv) ***$3.27x10^{-4}$***	Vapor Pressure (in. Hg @ °F) ***N/A***
Solubility ***N/A***	Molecular Weight (lb/lb-mole) ***TBD***
Absorptive Properties -	

Pollutant Emitted ***Antimony***	Chemical Abstract Services (CAS) Number ***7740-36-0***
Proposed Emission Rate (lb/hr) ***$6.50x10^{-6}$***	Emission Source (describe) ***Process Point***
Source Classification (process point, process fugitive, area fugitive) ***Process Point***	Pollutant Class and Form (organic/inorganic - particulate/vapor) ***Inorganic/particulate***
Concentration in Emission Stream (ppmv) ***$1.28x10^{-4}$***	Vapor Pressure (in. Hg @ °F) ***0 in Hg @ 77°F***
Solubility ***Insoluble in water***	Molecular Weight (lb/lb-mole) ***121.76***
Absorptive Properties -	

Pollutant Emitted ***Arsenic***	Chemical Abstract Services (CAS) Number ***7440-38-2***
Proposed Emission Rate (lb/hr) ***$2.50x10^{-6}$***	Emission Source (describe) ***Process Point***
Source Classification (process point, process fugitive, area fugitive) ***Process Point***	Pollutant Class and Form (organic/inorganic - particulate/vapor) ***Inorganic/Particulate***
Concentration in Emission Stream (ppmv) ***$7.99x10^{-5}$***	Vapor Pressure (in. Hg @ °F) ***0 in Hg @ 77°F***
Solubility ***Insoluble in water***	Molecular Weight (lb/lb-mole)
Absorptive Properties -	

Pollutant Emitted ***Beryllium***	Chemical Abstract Services (CAS) Number ***7440-41-7***
Proposed Emission Rate (lb/hr) ***$1.63x10^{-6}$***	Emission Source (describe) ***Process Point***
Source Classification (process point, process fugitive, area fugitive) ***Process Point***	Pollutant Class and Form (organic/inorganic - particulate/vapor) ***Inorganic/Particulate***
Concentration in Emission Stream (ppmv) ***$4.32x10^{-4}$***	Vapor Pressure (in. Hg @ °F) ***0 in Hg @ 77°F***
Solubility ***Insoluble in water***	Molecular Weight (lb/lb-mole) ***9.01***
Absorptive Properties -	

Pollutant Emitted ***Cadmium***	Chemical Abstract Services (CAS) Number ***7440-43-9***
Proposed Emission Rate (lb/hr) ***$1.38x10^{-5}$***	Emission Source (describe) ***Process Point***
Source Classification (process point, process fugitive, area fugitive) ***Process Point***	Pollutant Class and Form (organic/inorganic - particulate/vapor) ***Inorganic/Particulate***
Concentration in Emission Stream (ppmv) ***$2.93x10^{-4}$***	Vapor Pressure (in. Hg @ °F) ***0 in Hg@ 77°F***
Solubility ***Insoluble in water***	Molecular Weight (lb/lb-mole)
Absorptive Properties -	

Pollutant Emitted ***Chromium (hexavalent)***	Chemical Abstract Services (CAS) Number ***1333-82-0***
Proposed Emission Rate (lb/hr) ***$3.50x10^{-6}$***	Emission Source (describe) ***Process Point***
Source Classification (process point, process fugitive, area fugitive) ***Process Point***	Pollutant Class and Form (organic/inorganic - particulate/vapor) ***Inorganic/Particulate***
Concentration in Emission Stream (ppmv) ***$1.61x10^{-4}$***	Vapor Pressure (in. Hg @ °F) ***0 in Hg @77°F***
Solubility ***1,660 g/L in water @ 77°F***	Molecular Weight (lb/lb-mole) ***51.99***
Absorptive Properties -	

Pollutant Emitted ***Chromium***	Chemical Abstract Services (CAS) Number ***7440-47-3***
Proposed Emission Rate (lb/hr) ***$1.75x10^{-5}$***	Emission Source (describe) ***Process Point***
Source Classification (process point, process fugitive, area fugitive) ***Process Point***	Pollutant Class and Form (organic/inorganic - particulate/vapor) ***Inorganic/Particulate***
Concentration in Emission Stream (ppmv) ***$8.06x10^{-4}$***	Vapor Pressure (in. Hg @ °F) ***0 in Hg @ 77°F***
Solubility ***Insoluble in water***	Molecular Weight (lb/lb-mole) ***51.99***
Absorptive Properties -	

Pollutant Emitted ***Cobalt***	Chemical Abstract Services (CAS) Number ***7440-48-4***
Proposed Emission Rate (lb/hr) ***$1.03x10^{-6}$***	Emission Source (describe) ***Process Point***
Source Classification (process point, process fugitive, area fugitive) ***Process Point***	Pollutant Class and Form (organic/inorganic - particulate/vapor) ***Inorganic/Particulate***
Concentration in Emission Stream (ppmv) ***$4.17x10^{-5}$***	Vapor Pressure (in. Hg @ °F) ***0 in Hg @ 77°F***
Solubility ***Insoluble in water***	Molecular Weight (lb/lb-mole) ***58.93***
Absorptive Properties -	

Pollutant Emitted ***Manganese***	Chemical Abstract Services (CAS) Number
Proposed Emission Rate (lb/hr) ***$4.63x10^{-6}$***	Emission Source (describe) ***Process Point***
Source Classification (process point, process fugitive, area fugitive) ***Process Point***	Pollutant Class and Form (organic/inorganic - particulate/vapor) ***Inorganic/Particulate***
Concentration in Emission Stream (ppmv) ***$2.02x10^{-4}$***	Vapor Pressure (in. Hg @ °F) ***0 in Hg @ 77 °F***
Solubility ***Insoluble in water***	Molecular Weight (lb/lb-mole) ***54.94***
Absorptive Properties -	

Pollutant Emitted ***Mercury***	Chemical Abstract Services (CAS) Number ***7439-97-6***
Proposed Emission Rate (lb/hr) ***$3.13x10^{-6}$***	Emission Source (describe) ***Process Point***
Source Classification (process point, process fugitive, area fugitive) ***Process Point***	Pollutant Class and Form (organic/inorganic - particulate/vapor) ***Inorganic/Particulate***
Concentration in Emission Stream (ppmv) ***$3.73x10^{-5}$***	Vapor Pressure (in. Hg @ °F) ***$7.85x10^{-5}$ in Hg @ 77 °F***
Solubility ***Insoluble in water***	Molecular Weight (lb/lb-mole) ***200.59***
Absorptive Properties -	

Pollutant Emitted ***Nickel***	Chemical Abstract Services (CAS) Number ***7044-02-0***
Proposed Emission Rate (lb/hr) ***$2.63x10^{-5}$***	Emission Source (describe) ***Process Point***
Source Classification (process point, process fugitive, area fugitive) ***Process Point***	Pollutant Class and Form (organic/inorganic - particulate/vapor) ***Inorganic/Particulate***
Concentration in Emission Stream (ppmv) ***$1.07x10^{-3}$***	Vapor Pressure (in. Hg @ °F) ***0 in Hg Q 77°F***
Solubility ***Insoluble in water***	Molecular Weight (lb/lb-mole) ***58.69***
Absorptive Properties -	

Pollutant Emitted ***Selenium***	Chemical Abstract Services (CAS) Number ***7782-49-2***
Proposed Emission Rate (lb/hr) ***$1.10x10^{-5}$***	Emission Source (describe) ***Process Point***
Source Classification (process point, process fugitive, area fugitive) ***Process Point***	Pollutant Class and Form (organic/inorganic - particulate/vapor) ***Inorganic/Particulate***
Concentration in Emission Stream (ppmv) ***$3.34x10^{-4}$***	Vapor Pressure (in. Hg @ °F) ***0.29 in Hg @ 807***
Solubility ***Insoluble in water***	Molecular Weight (lb/lb-mole) ***78.96***
Absorptive Properties -	

Signature of Applicant	Date 09/26/2016

SEND COMPLETED APPLICATION AND ALL ATTACHMENTS TO:

North Dakota Department of
Health Division of Air Quality
918 E Divide Ave., 2nd Floor
Bismarck, ND 58501-1947
(701) 328-5188

PERMIT APPLICATION FOR
HAZARDOUS AIR POLLUTANT (HAP) SOURCES

NORTH DAKOTA DEPARTMENT OF HEALTH
DIVISION OF AIR QUALITY
SFN 8329 (09-12)

SECTION A1 - APPLICANT INFORMATION

Name of Firm or Organization ***Meridian Energy Group - Davis Refinery***		
Applicant's Name ***Tom Williams***		
Title ***VP of Planning &Permitting***	Telephone Number ***(707) 299-0182***	E-mail Address ***twilliams@meridianenergygroup.inc***
Mailing Address (Street & No.) ***2062 Business Center Drive, Suite 115***		
City ***Irvine***	State ***CA***	ZIP Code ***92612***

SECTION A2 - FACILITY INFORMATION

Contact Person for Air Pollution Matters ***Tom Johnson***		
Title ***Vice President of Operations***	Telephone Number ***(409)795-0792***	E-mail Address ***tjohnson@meridianenergygroup.inc***
Facility Address (Street & No. or Lat/Long to Nearest Second) ***37th Street / 46°52'45"N/103°14'55" W***		
City ***Belfield***	State ***ND***	ZIP Code ***58622***
County ***Billings***	Number of Employees at Location ***TBD***	
Land Area at Plant Site ***261*** Acres (or) Sq. Ft.	MSL Elevation at Plant ***2,685 feet***	

Describe Nature of Business/Process ***Petroleum Refining / Utility Boiler 1***

SECTION B – STACK DATA

Inside Diameter (ft) ***3.0***	Height Above Grade (ft) ***100***	
Gas Temperature at Exit (°F) ***294.2***	Gas Velocity at Exit (ft/sec) ***93.9***	Gas Volume (scfm) ***19,914.79***
Basis of any Estimates (attach separate sheet if necessary) ***Engineering data and Emission factors from Table 1.4-2. AP 42, Chapter 1: External Combustion Sources. See Document P-5715043-01-001-18042-I001 "EMISSIONS INVENTORY" and P-5715043-01-001-18035-I001 "BACT Analysis"***		
Are Emission Control Devices in Place? If YES – Complete SFN 8532		Yes ☐ No ☒
Nearest Residences or Building ***Utility building***	Distance (ft) ***0 ft***	Direction ***N/A***
Nearest Property Line ***Fenceline***	Distance (ft) ***451 ft***	Direction ***East***

SECTION C – EMISSION STREAM DATA

Source ID No. From SFN 8516 ***202-PK-0201A***	Mean Particle Diameter (μm) ***TBD***
Flow Rate (scfm) ***19,914.79***	Drift Velocity (ft/sec) ***93.9***
Stream Temperature (°F) ***294.2***	Particulate Concentration (gr/dscf) ***TBD***
Moisture Content (%) ***TBD***	Halogens or Metals Present? ***Metals***
Pressure (in. Hg) ***TBD***	Organic Content (ppmv) ***3.38×10^{-1}***
Heat Content (Btu/scfm) ***TBD***	O_2 Content (%) ***N/A***

SECTION D – POLLUTANT SPECIFIC DATA
(Complete One Box for Each Pollutant in Emission Stream)

Pollutant Emitted ***Acetaldehyde***	Chemical Abstract Services (CAS) Number ***75-07-0***
Proposed Emission Rate (lb/hr) ***1.80×10^{-4}***	Emission Source (describe) ***Process Point***
Source Classification (process point, process fugitive, area fugitive) ***Process Point***	Pollutant Class and Form (organic/inorganic - particulate/vapor) ***Organic Vapor***
Concentration in Emission Stream (ppmv) ***1.88×10^{-3}***	Vapor Pressure (in. Hg @ °F) ***35.51 in Hg @ 68°C***
Solubility ***$1 \times 10^{+6}$ mg/L in water @ 77°F***	Molecular Weight (lb/lb-mole) ***44.05***
Absorptive Properties -	

Pollutant Emitted ***Benzene***	Chemical Abstract Services (CAS) Number ***71-43-2***
Proposed Emission Rate (lb/hr) ***3.15×10^{-5}***	Emission Source (describe) ***Process Point***
Source Classification (process point, process fugitive, area fugitive) ***Process Point***	Pollutant Class and Form (organic/inorganic - particulate/vapor) ***Organic /Vapor***
Concentration in Emission Stream (ppmv) ***1.86×10^{-4}***	Vapor Pressure (in. Hg @ °F) ***3.73 in Hg @ 77 °F***
Solubility ***In water 1.79×10^{3} mg/L @ 77 °F***	Molecular Weight (lb/lb-mole) ***78.11***
Absorptive Properties -	

Pollutant Emitted ***Dichlorobenzene***	Chemical Abstract Services (CAS) Number ***Varies***
Proposed Emission Rate (lb/hr) ***1.80×10^{-5}***	Emission Source (describe) ***Process Point***
Source Classification (process point, process fugitive, area fugitive) ***Process Point***	Pollutant Class and Form (organic/inorganic - particulate/vapor) ***Organic /Vapor***
Concentration in Emission Stream (ppmv) ***5.65×10^{-5}***	Vapor Pressure (in. Hg @ °F) ***Varies***
Solubility ***Varies***	Molecular Weight (lb/lb-mole) ***147.00***
Absorptive Properties -	

Pollutant Emitted ***Ethylbenzene***	Chemical Abstract Services (CAS) Number ***100-41-4***
Proposed Emission Rate (lb/hr) ***$2.40x10^{-4}$***	Emission Source (describe) ***Process Point***
Source Classification (process point, process fugitive, area fugitive) ***Process Point***	Pollutant Class and Form (organic/inorganic - particulate/vapor) ***Organic /Vapor***
Concentration in Emission Stream (ppmv) ***$1.04x10^{-3}$***	Vapor Pressure (in. Hg @ °F) ***0.37 in Hg @ 77°F***
Solubility ***In water 0.014 g/100mL @ 59 °F***	Molecular Weight (lb/lb-mole) ***106.17***
Absorptive Properties -	

Pollutant Emitted ***Formaldehyde***	Chemical Abstract Services (CAS) Number ***50-00-0***
Proposed Emission Rate (lb/hr) ***$1.11x10^{-3}$***	Emission Source (describe) ***Process Point***
Source Classification (process point, process fugitive, area fugitive) ***Process Point***	Pollutant Class and Form (organic/inorganic - particulate/vapor) ***Organic /Vapor***
Concentration in Emission Stream (ppmv) ***$1.70x10^{-2}$***	Vapor Pressure (in. Hg @ °F) ***0.15 in Hg @ 77 °F***
Solubility ***In water 4.00 $x10^{5}$ mg/L @ 68°F***	Molecular Weight (lb/lb-mole) ***30.03***
Absorptive Properties -	

Pollutant Emitted ***Hexane***	Chemical Abstract Services (CAS) Number ***110-54-5***
Proposed Emission Rate (lb/hr) ***$2.70x10^{-2}$***	Emission Source (describe) ***Process Point***
Source Classification (process point, process fugitive, area fugitive) ***Process Point***	Pollutant Class and Form (organic/inorganic - particulate/vapor) ***Organic /Vapor***
Concentration in Emission Stream (ppmv) ***$1.44x10^{-1}$***	Vapor Pressure (in. Hg @ °F) ***5.90 in Hg @ 68 °F***
Solubility ***Insoluble in water***	Molecular Weight (lb/lb-mole) ***86.1***
Absorptive Properties -	

Pollutant Emitted ***Naphthalene***	Chemical Abstract Services (CAS) Number ***91-20-3***
Proposed Emission Rate (lb/hr) ***$9.00x10^{-6}$***	Emission Source (describe) ***Process Point***
Source Classification (process point, process fugitive, area fugitive) ***Process Point***	Pollutant Class and Form (organic/inorganic - particulate/vapor) ***Organic /Vapor***
Concentration in Emission Stream (ppmv) ***$3.24x10^{-5}$***	Vapor Pressure (in. Hg @ °F) ***0.003 in Hg @ 77 °F***
Solubility ***In water 31 mg/L @ 77 °F***	Molecular Weight (lb/lb-mole) ***128.17***
Absorptive Properties -	

Pollutant Emitted ***Toluene***	Chemical Abstract Services (CAS) Number ***108-88-3***
Proposed Emission Rate (lb/hr) ***4.95 x10^{-5}***	Emission Source (describe) ***Process Point***
Source Classification (process point, process fugitive, area fugitive) ***Process Point***	Pollutant Class and Form (organic/inorganic - particulate/vapor) ***Organic /Vapor***
Concentration in Emission Stream (ppmv) ***2.48x10^{-4}***	Vapor Pressure (in. Hg @ °F) ***1.12 in Hg @ 77°F***
Solubility ***In water 526 mg/L @ 77°F***	Molecular Weight (lb/lb-mole) ***92.14***
Absorptive Properties -	

Pollutant Emitted ***Xylene***	Chemical Abstract Services (CAS) Number ***95-47-6***
Proposed Emission Rate (lb/hr) ***3.75x10^{-4}***	Emission Source (describe) ***Process Point***
Source Classification (process point, process fugitive, area fugitive) ***Process Point***	Pollutant Class and Form (organic/inorganic - particulate/vapor) ***Organic /Vapor***
Concentration in Emission Stream (ppmv) ***1.63x10^{-3}***	Vapor Pressure (in. Hg @ °F) ***0.26 in Hg @ 77°F***
Solubility ***In water 178 mg/L @ 77°F***	Molecular Weight (lb/lb-mole) ***106.16***
Absorptive Properties -	

Pollutant Emitted ***PAH***	Chemical Abstract Services (CAS) Number ***N/A***
Proposed Emission Rate (lb/hr) ***6.39x10^{-5}***	Emission Source (describe) ***Process Point***
Source Classification (process point, process fugitive, area fugitive) ***Process Point***	Pollutant Class and Form (organic/inorganic - particulate/vapor) ***Organic /Vapor***
Concentration in Emission Stream (ppmv) ***3.02x10^{-4}***	Vapor Pressure (in. Hg @ °F) ***N/A***
Solubility ***N/A***	Molecular Weight (lb/lb-mole) ***TBD***
Absorptive Properties -	

Pollutant Emitted ***Antimony***	Chemical Abstract Services (CAS) Number ***7740-36-0***
Proposed Emission Rate (lb/hr) ***3.12x10^{-5}***	Emission Source (describe) ***Process Point***
Source Classification (process point, process fugitive, area fugitive) ***Process Point***	Pollutant Class and Form (organic/inorganic - particulate/vapor) ***Inorganic/particulate***
Concentration in Emission Stream (ppmv) ***1.18x10^{-4}***	Vapor Pressure (in. Hg @ °F) ***0 in Hg @ 77°F***
Solubility ***Insoluble in water***	Molecular Weight (lb/lb-mole) ***121.76***
Absorptive Properties -	

Pollutant Emitted ***Arsenic***	Chemical Abstract Services (CAS) Number ***7440-38-2***
Proposed Emission Rate (lb/hr) ***$1.20x10^{-5}$***	Emission Source (describe) ***Process Point***
Source Classification (process point, process fugitive, area fugitive) ***Process Point***	Pollutant Class and Form (organic/inorganic - particulate/vapor) ***Inorganic/Particulate***
Concentration in Emission Stream (ppmv) ***$7.39x10^{-5}$***	Vapor Pressure (in. Hg @ °F) ***0 in Hg @ 77°F***
Solubility ***Insoluble in water***	Molecular Weight (lb/lb-mole)
Absorptive Properties -	

Pollutant Emitted ***Beryllium***	Chemical Abstract Services (CAS) Number ***7440-41-7***
Proposed Emission Rate (lb/hr) ***$7.80x10^{-6}$***	Emission Source (describe) ***Process Point***
Source Classification (process point, process fugitive, area fugitive) ***Process Point***	Pollutant Class and Form (organic/inorganic - particulate/vapor) ***Inorganic/Particulate***
Concentration in Emission Stream (ppmv) ***$3.99x10^{-4}$***	Vapor Pressure (in. Hg @ °F) ***0 in Hg @ 77°F***
Solubility ***Insoluble in water***	Molecular Weight (lb/lb-mole) ***9.01***
Absorptive Properties -	

Pollutant Emitted ***Cadmium***	Chemical Abstract Services (CAS) Number ***7440-43-9***
Proposed Emission Rate (lb/hr) ***$6.60x10^{-5}$***	Emission Source (describe) ***Process Point***
Source Classification (process point, process fugitive, area fugitive) ***Process Point***	Pollutant Class and Form (organic/inorganic - particulate/vapor) ***Inorganic/Particulate***
Concentration in Emission Stream (ppmv) ***$2.71x10^{-4}$***	Vapor Pressure (in. Hg @ °F) ***0 in Hg@ 77°F***
Solubility ***Insoluble in water***	Molecular Weight (lb/lb-mole)
Absorptive Properties -	

Pollutant Emitted ***Chromium (hexavalent)***	Chemical Abstract Services (CAS) Number ***1333-82-0***
Proposed Emission Rate (lb/hr) ***$1.68x10^{-5}$***	Emission Source (describe) ***Process Point***
Source Classification (process point, process fugitive, area fugitive) ***Process Point***	Pollutant Class and Form (organic/inorganic - particulate/vapor) ***Inorganic/Particulate***
Concentration in Emission Stream (ppmv) ***$1.49x10^{-4}$***	Vapor Pressure (in. Hg @ °F) ***0 in Hg @77°F***
Solubility ***1,660 g/L in water @ 77°F***	Molecular Weight (lb/lb-mole) ***51.99***
Absorptive Properties -	

Pollutant Emitted ***Chromium***	Chemical Abstract Services (CAS) Number ***7440-47-3***
Proposed Emission Rate (lb/hr) ***$8.40x10^{-5}$***	Emission Source (describe) ***Process Point***
Source Classification (process point, process fugitive, area fugitive) ***Process Point***	Pollutant Class and Form (organic/inorganic - particulate/vapor) ***Inorganic/Particulate***
Concentration in Emission Stream (ppmv) ***$7.45x10^{-4}$***	Vapor Pressure (in. Hg @ °F) ***0 in Hg @ 77°F***
Solubility ***Insoluble in water***	Molecular Weight (lb/lb-mole) ***51.99***
Absorptive Properties -	

Pollutant Emitted ***Cobalt***	Chemical Abstract Services (CAS) Number ***7440-48-4***
Proposed Emission Rate (lb/hr) ***$4.92x10^{-6}$***	Emission Source (describe) ***Process Point***
Source Classification (process point, process fugitive, area fugitive) ***Process Point***	Pollutant Class and Form (organic/inorganic - particulate/vapor) ***Inorganic/Particulate***
Concentration in Emission Stream (ppmv) ***$3.85x10^{-5}$***	Vapor Pressure (in. Hg @ °F) ***0 in Hg @ 77°F***
Solubility ***Insoluble in water***	Molecular Weight (lb/lb-mole) ***58.93***
Absorptive Properties -	

Pollutant Emitted ***Manganese***	Chemical Abstract Services (CAS) Number
Proposed Emission Rate (lb/hr) ***$2.22x10^{-5}$***	Emission Source (describe) ***Process Point***
Source Classification (process point, process fugitive, area fugitive) ***Process Point***	Pollutant Class and Form (organic/inorganic - particulate/vapor) ***Inorganic/Particulate***
Concentration in Emission Stream (ppmv) ***$1.86x10^{-4}$***	Vapor Pressure (in. Hg @ °F) ***0 in Hg @ 77 °F***
Solubility ***Insoluble in water***	Molecular Weight (lb/lb-mole) ***54.94***
Absorptive Properties -	

Pollutant Emitted ***Mercury***	Chemical Abstract Services (CAS) Number ***7439-97-6***
Proposed Emission Rate (lb/hr) ***$1.50x10^{-5}$***	Emission Source (describe) ***Process Point***
Source Classification (process point, process fugitive, area fugitive) ***Process Point***	Pollutant Class and Form (organic/inorganic - particulate/vapor) ***Inorganic/Particulate***
Concentration in Emission Stream (ppmv) ***$3.45x10^{-5}$***	Vapor Pressure (in. Hg @ °F) ***$7.85x10^{-5}$ in Hg @ 77 °F***
Solubility ***Insoluble in water***	Molecular Weight (lb/lb-mole) ***200.59***
Absorptive Properties -	

Pollutant Emitted ***Nickel***	Chemical Abstract Services (CAS) Number ***7044-02-0***
Proposed Emission Rate (lb/hr) ***1.26x10^{-4}***	Emission Source (describe) ***Process Point***
Source Classification (process point, process fugitive, area fugitive) ***Process Point***	Pollutant Class and Form (organic/inorganic - particulate/vapor) ***Inorganic/Particulate***
Concentration in Emission Stream (ppmv) ***9.90x10^{-4}***	Vapor Pressure (in. Hg @ °F) ***0 in Hg Q 77°F***
Solubility ***Insoluble in water***	Molecular Weight (lb/lb-mole) ***58.69***
Absorptive Properties -	

Pollutant Emitted ***Selenium***	Chemical Abstract Services (CAS) Number ***7782-49-2***
Proposed Emission Rate (lb/hr) ***5.28x10^{-5}***	Emission Source (describe) ***Process Point***
Source Classification (process point, process fugitive, area fugitive) ***Process Point***	Pollutant Class and Form (organic/inorganic - particulate/vapor) ***Inorganic/Particulate***
Concentration in Emission Stream (ppmv) ***3.08x10^{-4}***	Vapor Pressure (in. Hg @ °F) ***0.29 in Hg @ 807***
Solubility ***Insoluble in water***	Molecular Weight (lb/lb-mole) ***78.96***
Absorptive Properties -	

Signature of Applicant	Date 09/26/2016

SEND COMPLETED APPLICATION AND ALL ATTACHMENTS TO:

North Dakota Department of
Health Division of Air Quality
918 E Divide Ave., 2nd Floor
Bismarck, ND 58501-1947
(701) 328-5188

PERMIT APPLICATION FOR
HAZARDOUS AIR POLLUTANT (HAP) SOURCES

NORTH DAKOTA DEPARTMENT OF HEALTH
DIVISION OF AIR QUALITY
SFN 8329 (09-12)

SECTION A1 - APPLICANT INFORMATION

Name of Firm or Organization ***Meridian Energy Group - Davis Refinery***		
Applicant's Name ***Tom Williams***		
Title ***VP of Planning &Permitting***	Telephone Number ***(707) 299-0182***	E-mail Address ***twilliams@meridianenergygroup.inc***
Mailing Address (Street & No.) ***2062 Business Center Drive, Suite 115***		
City ***Irvine***	State ***CA***	ZIP Code ***92612***

SECTION A2 - FACILITY INFORMATION

Contact Person for Air Pollution Matters ***Tom Johnson***		
Title ***Vice President of Operations***	Telephone Number ***(409)795-0792***	E-mail Address ***tjohnson@meridianenergygroup.inc***
Facility Address (Street & No. or Lat/Long to Nearest Second) ***37th Street / 46°52'45"N/103°14'55" W***		
City ***Belfield***	State ***ND***	ZIP Code ***58622***
County ***Billings***	Number of Employees at Location ***TBD***	
Land Area at Plant Site ***261*** Acres (or) Sq. Ft.	MSL Elevation at Plant ***2,685 feet***	

Describe Nature of Business/Process ***Petroleum Refining / Utility Boiler 2***

SECTION B – STACK DATA

Inside Diameter (ft) ***3.0***	Height Above Grade (ft) ***100***	
Gas Temperature at Exit (°F) ***294.2***	Gas Velocity at Exit (ft/sec) ***93.9***	Gas Volume (scfm) ***19,914.79***
Basis of any Estimates (attach separate sheet if necessary) ***Engineering data and Emission factors from Table 1.4-2. AP 42, Chapter 1: External Combustion Sources. See Document P-5715043-01-001-18042-I001 "EMISSIONS INVENTORY" and P-5715043-01-001-18035-I001 "BACT Analysis"***		
Are Emission Control Devices in Place? If YES – Complete SFN 8532		Yes ☐ No ☒
Nearest Residences or Building ***Utility building***	Distance (ft) ***0 ft***	Direction ***N/A***
Nearest Property Line ***Fenceline***	Distance (ft) ***415 ft***	Direction ***East***

SECTION C – EMISSION STREAM DATA

Source ID No. From SFN 8516 ***202-PK-0201B***	Mean Particle Diameter (μm) ***TBD***
Flow Rate (scfm) ***19,914.79***	Drift Velocity (ft/sec) ***93.9***
Stream Temperature (°F) ***294.2***	Particulate Concentration (gr/dscf) ***TBD***
Moisture Content (%) ***TBD***	Halogens or Metals Present? ***Metals***
Pressure (in. Hg) ***TBD***	Organic Content (ppmv) $3.381x10^{-1}$
Heat Content (Btu/scfm) ***TBD***	O_2 Content (%) ***N/A***

SECTION D – POLLUTANT SPECIFIC DATA
(Complete One Box for Each Pollutant in Emission Stream)

Pollutant Emitted ***Acetaldehyde***	Chemical Abstract Services (CAS) Number ***75-07-0***
Proposed Emission Rate (lb/hr) $1.80x10^{-4}$	Emission Source (describe) ***Process Point***
Source Classification (process point, process fugitive, area fugitive) ***Process Point***	Pollutant Class and Form (organic/inorganic - particulate/vapor) ***Organic Vapor***
Concentration in Emission Stream (ppmv) $1.88x10^{-3}$	Vapor Pressure (in. Hg @ °F) ***35.51 in Hg @ 68°C***
Solubility $1x10^{+6}$ ***mg/L in water @ 77°F***	Molecular Weight (lb/lb-mole) ***44.05***
Absorptive Properties -	

Pollutant Emitted ***Benzene***	Chemical Abstract Services (CAS) Number ***71-43-2***
Proposed Emission Rate (lb/hr) $3.15x10^{-5}$	Emission Source (describe) ***Process Point***
Source Classification (process point, process fugitive, area fugitive) ***Process Point***	Pollutant Class and Form (organic/inorganic - particulate/vapor) ***Organic /Vapor***
Concentration in Emission Stream (ppmv) $1.86\ x10^{-4}$	Vapor Pressure (in. Hg @ °F) ***3.73 in Hg @ 77 °F***
Solubility ***In water*** $1.79x10^{3}$ ***mg/L @ 77 °F***	Molecular Weight (lb/lb-mole) ***78.11***
Absorptive Properties -	

Pollutant Emitted ***Dichlorobenzene***	Chemical Abstract Services (CAS) Number ***Varies***
Proposed Emission Rate (lb/hr) $1.80x10^{-5}$	Emission Source (describe) ***Process Point***
Source Classification (process point, process fugitive, area fugitive) ***Process Point***	Pollutant Class and Form (organic/inorganic - particulate/vapor) ***Organic /Vapor***
Concentration in Emission Stream (ppmv) $5.65x10^{-5}$	Vapor Pressure (in. Hg @ °F) ***Varies***
Solubility ***Varies***	Molecular Weight (lb/lb-mole) ***147.00***
Absorptive Properties -	

Pollutant Emitted ***Ethylbenzene***	Chemical Abstract Services (CAS) Number ***100-41-4***
Proposed Emission Rate (lb/hr) ***$2.40x10^{-4}$***	Emission Source (describe) ***Process Point***
Source Classification (process point, process fugitive, area fugitive) ***Process Point***	Pollutant Class and Form (organic/inorganic - particulate/vapor) ***Organic /Vapor***
Concentration in Emission Stream (ppmv) ***$1.04x10^{-3}$***	Vapor Pressure (in. Hg @ °F) ***0.37 in Hg @ 77°F***
Solubility ***In water 0.014 g/100mL @ 59 °F***	Molecular Weight (lb/lb-mole) ***106.17***
Absorptive Properties -	

Pollutant Emitted ***Formaldehyde***	Chemical Abstract Services (CAS) Number ***50-00-0***
Proposed Emission Rate (lb/hr) ***$1.11x10^{-3}$***	Emission Source (describe) ***Process Point***
Source Classification (process point, process fugitive, area fugitive) ***Process Point***	Pollutant Class and Form (organic/inorganic - particulate/vapor) ***Organic /Vapor***
Concentration in Emission Stream (ppmv) ***$1.70x10^{-2}$***	Vapor Pressure (in. Hg @ °F) ***0.15 in Hg @ 77 °F***
Solubility ***In water 4.00 $x10^{5}$ mg/L @ 68°F***	Molecular Weight (lb/lb-mole) ***30.03***
Absorptive Properties -	

Pollutant Emitted ***Hexane***	Chemical Abstract Services (CAS) Number ***110-54-5***
Proposed Emission Rate (lb/hr) ***$2.70x10^{-2}$***	Emission Source (describe) ***Process Point***
Source Classification (process point, process fugitive, area fugitive) ***Process Point***	Pollutant Class and Form (organic/inorganic - particulate/vapor) ***Organic /Vapor***
Concentration in Emission Stream (ppmv) ***$1.44x10^{-1}$***	Vapor Pressure (in. Hg @ °F) ***5.90 in Hg @ 68 °F***
Solubility ***Insoluble in water***	Molecular Weight (lb/lb-mole) ***86.1***
Absorptive Properties -	

Pollutant Emitted ***Naphthalene***	Chemical Abstract Services (CAS) Number ***91-20-3***
Proposed Emission Rate (lb/hr) ***$9.00x10^{-6}$***	Emission Source (describe) ***Process Point***
Source Classification (process point, process fugitive, area fugitive) ***Process Point***	Pollutant Class and Form (organic/inorganic - particulate/vapor) ***Organic /Vapor***
Concentration in Emission Stream (ppmv) ***$3.24x10^{-5}$***	Vapor Pressure (in. Hg @ °F) ***0.003 in Hg @ 77 °F***
Solubility ***In water 31 mg/L @ 77 °F***	Molecular Weight (lb/lb-mole) ***128.17***
Absorptive Properties -	

Pollutant Emitted ***Toluene***	Chemical Abstract Services (CAS) Number ***108-88-3***
Proposed Emission Rate (lb/hr) ***4.95 x10^{-5}***	Emission Source (describe) ***Process Point***
Source Classification (process point, process fugitive, area fugitive) ***Process Point***	Pollutant Class and Form (organic/inorganic - particulate/vapor) ***Organic /Vapor***
Concentration in Emission Stream (ppmv) ***2.48x10^{-4}***	Vapor Pressure (in. Hg @ °F) ***1.12 in Hg @ 77°F***
Solubility ***In water 526 mg/L @ 77°F***	Molecular Weight (lb/lb-mole) ***92.14***
Absorptive Properties -	

Pollutant Emitted ***Xylene***	Chemical Abstract Services (CAS) Number ***95-47-6***
Proposed Emission Rate (lb/hr) ***3.75x10^{-4}***	Emission Source (describe) ***Process Point***
Source Classification (process point, process fugitive, area fugitive) ***Process Point***	Pollutant Class and Form (organic/inorganic - particulate/vapor) ***Organic /Vapor***
Concentration in Emission Stream (ppmv) ***1.63x10^{-3}***	Vapor Pressure (in. Hg @ °F) ***0.26 in Hg @ 77°F***
Solubility ***In water 178 mg/L @ 77°F***	Molecular Weight (lb/lb-mole) ***106.16***
Absorptive Properties -	

Pollutant Emitted ***PAH***	Chemical Abstract Services (CAS) Number ***N/A***
Proposed Emission Rate (lb/hr) ***6.39x10^{-5}***	Emission Source (describe) ***Process Point***
Source Classification (process point, process fugitive, area fugitive) ***Process Point***	Pollutant Class and Form (organic/inorganic - particulate/vapor) ***Organic /Vapor***
Concentration in Emission Stream (ppmv) ***3.02x10^{-4}***	Vapor Pressure (in. Hg @ °F) ***N/A***
Solubility ***N/A***	Molecular Weight (lb/lb-mole) ***TBD***
Absorptive Properties -	

Pollutant Emitted ***Antimony***	Chemical Abstract Services (CAS) Number ***7740-36-0***
Proposed Emission Rate (lb/hr) ***3.12x10^{-5}***	Emission Source (describe) ***Process Point***
Source Classification (process point, process fugitive, area fugitive) ***Process Point***	Pollutant Class and Form (organic/inorganic - particulate/vapor) ***Inorganic/particulate***
Concentration in Emission Stream (ppmv) ***1.18x10^{-4}***	Vapor Pressure (in. Hg @ °F) ***0 in Hg @ 77°F***
Solubility ***Insoluble in water***	Molecular Weight (lb/lb-mole) ***121.76***
Absorptive Properties -	

Pollutant Emitted ***Arsenic***	Chemical Abstract Services (CAS) Number ***7440-38-2***
Proposed Emission Rate (lb/hr) ***$1.20x10^{-5}$***	Emission Source (describe) ***Process Point***
Source Classification (process point, process fugitive, area fugitive) ***Process Point***	Pollutant Class and Form (organic/inorganic - particulate/vapor) ***Inorganic/Particulate***
Concentration in Emission Stream (ppmv) ***$7.39x10^{-5}$***	Vapor Pressure (in. Hg @ °F) ***0 in Hg @ 77°F***
Solubility ***Insoluble in water***	Molecular Weight (lb/lb-mole)
Absorptive Properties -	

Pollutant Emitted ***Beryllium***	Chemical Abstract Services (CAS) Number ***7440-41-7***
Proposed Emission Rate (lb/hr) ***$7.80x10^{-6}$***	Emission Source (describe) ***Process Point***
Source Classification (process point, process fugitive, area fugitive) ***Process Point***	Pollutant Class and Form (organic/inorganic - particulate/vapor) ***Inorganic/Particulate***
Concentration in Emission Stream (ppmv) ***$3.99x10^{-4}$***	Vapor Pressure (in. Hg @ °F) ***0 in Hg @ 77°F***
Solubility ***Insoluble in water***	Molecular Weight (lb/lb-mole) ***9.01***
Absorptive Properties -	

Pollutant Emitted ***Cadmium***	Chemical Abstract Services (CAS) Number ***7440-43-9***
Proposed Emission Rate (lb/hr) ***$6.60x10^{-5}$***	Emission Source (describe) ***Process Point***
Source Classification (process point, process fugitive, area fugitive) ***Process Point***	Pollutant Class and Form (organic/inorganic - particulate/vapor) ***Inorganic/Particulate***
Concentration in Emission Stream (ppmv) ***$2.71x10^{-4}$***	Vapor Pressure (in. Hg @ °F) ***0 in Hg@ 77°F***
Solubility ***Insoluble in water***	Molecular Weight (lb/lb-mole)
Absorptive Properties -	

Pollutant Emitted ***Chromium (hexavalent)***	Chemical Abstract Services (CAS) Number ***1333-82-0***
Proposed Emission Rate (lb/hr) ***$1.68x10^{-5}$***	Emission Source (describe) ***Process Point***
Source Classification (process point, process fugitive, area fugitive) ***Process Point***	Pollutant Class and Form (organic/inorganic - particulate/vapor) ***Inorganic/Particulate***
Concentration in Emission Stream (ppmv) ***$1.49x10^{-4}$***	Vapor Pressure (in. Hg @ °F) ***0 in Hg @77°F***
Solubility ***1,660 g/L in water @ 77°F***	Molecular Weight (lb/lb-mole) ***51.99***
Absorptive Properties -	

Pollutant Emitted ***Chromium***	Chemical Abstract Services (CAS) Number ***7440-47-3***
Proposed Emission Rate (lb/hr) ***$8.40x10^{-5}$***	Emission Source (describe) ***Process Point***
Source Classification (process point, process fugitive, area fugitive) ***Process Point***	Pollutant Class and Form (organic/inorganic - particulate/vapor) ***Inorganic/Particulate***
Concentration in Emission Stream (ppmv) ***$7.45x10^{-4}$***	Vapor Pressure (in. Hg @ °F) ***0 in Hg @ 77°F***
Solubility ***Insoluble in water***	Molecular Weight (lb/lb-mole) ***51.99***
Absorptive Properties -	

Pollutant Emitted ***Cobalt***	Chemical Abstract Services (CAS) Number ***7440-48-4***
Proposed Emission Rate (lb/hr) ***$4.92x10^{-6}$***	Emission Source (describe) ***Process Point***
Source Classification (process point, process fugitive, area fugitive) ***Process Point***	Pollutant Class and Form (organic/inorganic - particulate/vapor) ***Inorganic/Particulate***
Concentration in Emission Stream (ppmv) ***$3.85x10^{-5}$***	Vapor Pressure (in. Hg @ °F) ***0 in Hg @ 77°F***
Solubility ***Insoluble in water***	Molecular Weight (lb/lb-mole) ***58.93***
Absorptive Properties -	

Pollutant Emitted ***Manganese***	Chemical Abstract Services (CAS) Number
Proposed Emission Rate (lb/hr) ***$2.22x10^{-5}$***	Emission Source (describe) ***Process Point***
Source Classification (process point, process fugitive, area fugitive) ***Process Point***	Pollutant Class and Form (organic/inorganic - particulate/vapor) ***Inorganic/Particulate***
Concentration in Emission Stream (ppmv) ***$1.86x10^{-4}$***	Vapor Pressure (in. Hg @ °F) ***0 in Hg @ 77 °F***
Solubility ***Insoluble in water***	Molecular Weight (lb/lb-mole) ***54.94***
Absorptive Properties -	

Pollutant Emitted ***Mercury***	Chemical Abstract Services (CAS) Number ***7439-97-6***
Proposed Emission Rate (lb/hr) ***$1.50x10^{-5}$***	Emission Source (describe) ***Process Point***
Source Classification (process point, process fugitive, area fugitive) ***Process Point***	Pollutant Class and Form (organic/inorganic - particulate/vapor) ***Inorganic/Particulate***
Concentration in Emission Stream (ppmv) ***$3.45x10^{-5}$***	Vapor Pressure (in. Hg @ °F) ***$7.85x10^{-5}$ in Hg @ 77 °F***
Solubility ***Insoluble in water***	Molecular Weight (lb/lb-mole) ***200.59***
Absorptive Properties -	

Pollutant Emitted ***Nickel***	Chemical Abstract Services (CAS) Number ***7044-02-0***
Proposed Emission Rate (lb/hr) ***$1.26x10^{-4}$***	Emission Source (describe) ***Process Point***
Source Classification (process point, process fugitive, area fugitive) ***Process Point***	Pollutant Class and Form (organic/inorganic - particulate/vapor) ***Inorganic/Particulate***
Concentration in Emission Stream (ppmv) ***$9.90x10^{-4}$***	Vapor Pressure (in. Hg @ °F) ***0 in Hg Q 77°F***
Solubility ***Insoluble in water***	Molecular Weight (lb/lb-mole) ***58.69***
Absorptive Properties -	

Pollutant Emitted ***Selenium***	Chemical Abstract Services (CAS) Number ***7782-49-2***
Proposed Emission Rate (lb/hr) ***$5.28x10^{-5}$***	Emission Source (describe) ***Process Point***
Source Classification (process point, process fugitive, area fugitive) ***Process Point***	Pollutant Class and Form (organic/inorganic - particulate/vapor) ***Inorganic/Particulate***
Concentration in Emission Stream (ppmv) ***$3.08x10^{-4}$***	Vapor Pressure (in. Hg @ °F) ***0.29 in Hg @ 807***
Solubility ***Insoluble in water***	Molecular Weight (lb/lb-mole) ***78.96***
Absorptive Properties -	

Signature of Applicant	Date 09/26/2016

SEND COMPLETED APPLICATION AND ALL ATTACHMENTS TO:

North Dakota Department of
Health Division of Air Quality
918 E Divide Ave., 2nd Floor
Bismarck, ND 58501-1947
(701) 328-5188

PERMIT APPLICATION FOR
HAZARDOUS AIR POLLUTANT (HAP) SOURCES

NORTH DAKOTA DEPARTMENT OF HEALTH
DIVISION OF AIR QUALITY
SFN 8329 (09-12)

SECTION A1 - APPLICANT INFORMATION

Name of Firm or Organization ***Meridian Energy Group - Davis Refinery***		
Applicant's Name ***Tom Williams***		
Title ***VP of Planning &Permitting***	Telephone Number ***(707) 299-0182***	E-mail Address ***twilliams@meridianenergygroup.inc***
Mailing Address (Street & No.) ***2062 Business Center Drive, Suite 115***		
City ***Irvine***	State ***CA***	ZIP Code ***92612***

SECTION A2 - FACILITY INFORMATION

Contact Person for Air Pollution Matters ***Tom Johnson***		
Title ***Vice President of Operations***	Telephone Number ***(409)795-0792***	E-mail Address ***tjohnson@meridianenergygroup.inc***
Facility Address (Street & No. or Lat/Long to Nearest Second) ***37th Street / 46°52'45"N/103°14'55" W***		
City ***Belfield***	State ***ND***	ZIP Code ***58622***
County ***Billings***	Number of Employees at Location ***TBD***	
Land Area at Plant Site ***261*** Acres (or) Sq. Ft.	MSL Elevation at Plant ***2,685 feet***	

Describe Nature of Business/Process ***Petroleum Refining / Utility Boiler 3***

SECTION B – STACK DATA

Inside Diameter (ft) ***3.0***	Height Above Grade (ft) ***100***	
Gas Temperature at Exit (°F) ***294.2***	Gas Velocity at Exit (ft/sec) ***93.9***	Gas Volume (scfm) ***19,914.80***
Basis of any Estimates (attach separate sheet if necessary) ***Engineering data and Emission factors from Table 1.4-2. AP 42, Chapter 1: External Combustion Sources. See Document P-5715043-01-001-18042-I001 "EMISSIONS INVENTORY" and P-5715043-01-001-18035-I001 "BACT Analysis"***		
Are Emission Control Devices in Place? If YES – Complete SFN 8532		Yes ☐ No ☒
Nearest Residences or Building ***Utility building***	Distance (ft) ***0 ft***	Direction ***N/A***
Nearest Property Line ***Fenceline***	Distance (ft) ***379 ft***	Direction ***East***

SECTION C – EMISSION STREAM DATA

Source ID No. From SFN 8516 ***202-PK-0201C***	Mean Particle Diameter (μm) ***TBD***
Flow Rate (scfm) ***19,914.80***	Drift Velocity (ft/sec) ***93.9***
Stream Temperature (°F) ***294.2***	Particulate Concentration (gr/dscf) ***TBD***
Moisture Content (%) ***TBD***	Halogens or Metals Present? ***Metals***
Pressure (in. Hg) ***TBD***	Organic Content (ppmv) $2.81x10^{-2}$
Heat Content (Btu/scfm) ***TBD***	O_2 Content (%) ***N/A***

SECTION D – POLLUTANT SPECIFIC DATA
(Complete One Box for Each Pollutant in Emission Stream)

Pollutant Emitted ***Acetaldehyde***	Chemical Abstract Services (CAS) Number ***75-07-0***
Proposed Emission Rate (lb/hr) $1.50x10^{-5}$	Emission Source (describe) ***Process Point***
Source Classification (process point, process fugitive, area fugitive) ***Process Point***	Pollutant Class and Form (organic/inorganic - particulate/vapor) ***Organic Vapor***
Concentration in Emission Stream (ppmv) $1.57x10^{-4}$	Vapor Pressure (in. Hg @ °F) ***35.51 in Hg @ 68°C***
Solubility $1x10^{+6}$ ***mg/L in water @ 77°F***	Molecular Weight (lb/lb-mole) ***44.05***
Absorptive Properties -	

Pollutant Emitted ***Benzene***	Chemical Abstract Services (CAS) Number ***71-43-2***
Proposed Emission Rate (lb/hr) $2.63x10^{-6}$	Emission Source (describe) ***Process Point***
Source Classification (process point, process fugitive, area fugitive) ***Process Point***	Pollutant Class and Form (organic/inorganic - particulate/vapor) ***Organic /Vapor***
Concentration in Emission Stream (ppmv) $1.55x10^{-5}$	Vapor Pressure (in. Hg @ °F) ***3.73 in Hg @ 77 °F***
Solubility ***In water*** $1.79x10^{3}$ ***mg/L @ 77 °F***	Molecular Weight (lb/lb-mole) ***78.11***
Absorptive Properties -	

Pollutant Emitted ***Dichlorobenzene***	Chemical Abstract Services (CAS) Number ***Varies***
Proposed Emission Rate (lb/hr) $1.50x10^{-6}$	Emission Source (describe) ***Process Point***
Source Classification (process point, process fugitive, area fugitive) ***Process Point***	Pollutant Class and Form (organic/inorganic - particulate/vapor) ***Organic /Vapor***
Concentration in Emission Stream (ppmv) $4.71x10^{-6}$	Vapor Pressure (in. Hg @ °F) ***Varies***
Solubility ***Varies***	Molecular Weight (lb/lb-mole) ***147.00***
Absorptive Properties -	

Pollutant Emitted ***Ethylbenzene***	Chemical Abstract Services (CAS) Number ***100-41-4***
Proposed Emission Rate (lb/hr) ***$2.00x10^{-5}$***	Emission Source (describe) ***Process Point***
Source Classification (process point, process fugitive, area fugitive) ***Process Point***	Pollutant Class and Form (organic/inorganic - particulate/vapor) ***Organic /Vapor***
Concentration in Emission Stream (ppmv) ***$8.89x10^{-5}$***	Vapor Pressure (in. Hg @ °F) ***0.37 in Hg @ 77°F***
Solubility ***In water 0.014 g/100mL @ 59 °F***	Molecular Weight (lb/lb-mole) ***106.17***
Absorptive Properties -	

Pollutant Emitted ***Formaldehyde***	Chemical Abstract Services (CAS) Number ***50-00-0***
Proposed Emission Rate (lb/hr) ***$9.25x10^{-5}$***	Emission Source (describe) ***Process Point***
Source Classification (process point, process fugitive, area fugitive) ***Process Point***	Pollutant Class and Form (organic/inorganic - particulate/vapor) ***Organic /Vapor***
Concentration in Emission Stream (ppmv) ***$1.42x10^{-3}$***	Vapor Pressure (in. Hg @ °F) ***0.15 in Hg @ 77 °F***
Solubility ***In water 4.00 $x10^{5}$ mg/L @ 68°F***	Molecular Weight (lb/lb-mole) ***30.03***
Absorptive Properties -	

Pollutant Emitted ***Hexane***	Chemical Abstract Services (CAS) Number ***110-54-5***
Proposed Emission Rate (lb/hr) ***$2.25x10^{-3}$***	Emission Source (describe) ***Process Point***
Source Classification (process point, process fugitive, area fugitive) ***Process Point***	Pollutant Class and Form (organic/inorganic - particulate/vapor) ***Organic /Vapor***
Concentration in Emission Stream (ppmv) ***$1.20x10^{-2}$***	Vapor Pressure (in. Hg @ °F) ***5.90 in Hg @ 68 °F***
Solubility ***Insoluble in water***	Molecular Weight (lb/lb-mole) ***86.1***
Absorptive Properties -	

Pollutant Emitted ***Naphthalene***	Chemical Abstract Services (CAS) Number ***91-20-3***
Proposed Emission Rate (lb/hr) ***$7.50x10^{-7}$***	Emission Source (describe) ***Process Point***
Source Classification (process point, process fugitive, area fugitive) ***Process Point***	Pollutant Class and Form (organic/inorganic - particulate/vapor) ***Organic /Vapor***
Concentration in Emission Stream (ppmv) ***$2.70x10^{-6}$***	Vapor Pressure (in. Hg @ °F) ***0.003 in Hg @ 77 °F***
Solubility ***In water 31 mg/L @ 77 °F***	Molecular Weight (lb/lb-mole) ***128.17***
Absorptive Properties -	

Pollutant Emitted ***Toluene***	Chemical Abstract Services (CAS) Number ***108-88-3***
Proposed Emission Rate (lb/hr) ***4.13 x10^{-6}***	Emission Source (describe) ***Process Point***
Source Classification (process point, process fugitive, area fugitive) ***Process Point***	Pollutant Class and Form (organic/inorganic - particulate/vapor) ***Organic /Vapor***
Concentration in Emission Stream (ppmv) ***2.06x10^{-5}***	Vapor Pressure (in. Hg @ °F) ***1.12 in Hg @ 77°F***
Solubility ***In water 526 mg/L @ 77°F***	Molecular Weight (lb/lb-mole) ***92.14***
Absorptive Properties -	

Pollutant Emitted ***Xylene***	Chemical Abstract Services (CAS) Number ***95-47-6***
Proposed Emission Rate (lb/hr) ***3.13x10^{-5}***	Emission Source (describe) ***Process Point***
Source Classification (process point, process fugitive, area fugitive) ***Process Point***	Pollutant Class and Form (organic/inorganic - particulate/vapor) ***Organic /Vapor***
Concentration in Emission Stream (ppmv) ***1.36x10^{-4}***	Vapor Pressure (in. Hg @ °F) ***0.26 in Hg @ 77°F***
Solubility ***In water 178 mg/L @ 77°F***	Molecular Weight (lb/lb-mole) ***106.16***
Absorptive Properties -	

Pollutant Emitted ***PAH***	Chemical Abstract Services (CAS) Number ***N/A***
Proposed Emission Rate (lb/hr) ***5.32x10^{-6}***	Emission Source (describe) ***Process Point***
Source Classification (process point, process fugitive, area fugitive) ***Process Point***	Pollutant Class and Form (organic/inorganic - particulate/vapor) ***Organic /Vapor***
Concentration in Emission Stream (ppmv) ***2.52x10^{-5}***	Vapor Pressure (in. Hg @ °F) ***N/A***
Solubility ***N/A***	Molecular Weight (lb/lb-mole) ***TBD***
Absorptive Properties -	

Pollutant Emitted ***Antimony***	Chemical Abstract Services (CAS) Number ***7740-36-0***
Proposed Emission Rate (lb/hr) ***2.60x10^{-6}***	Emission Source (describe) ***Process Point***
Source Classification (process point, process fugitive, area fugitive) ***Process Point***	Pollutant Class and Form (organic/inorganic - particulate/vapor) ***Inorganic/particulate***
Concentration in Emission Stream (ppmv) ***9.85x10^{-6}***	Vapor Pressure (in. Hg @ °F) ***0 in Hg @ 77°F***
Solubility ***Insoluble in water***	Molecular Weight (lb/lb-mole) ***121.76***
Absorptive Properties -	

Pollutant Emitted ***Arsenic***	Chemical Abstract Services (CAS) Number ***7440-38-2***
Proposed Emission Rate (lb/hr) ***$1.00x10^{-6}$***	Emission Source (describe) ***Process Point***
Source Classification (process point, process fugitive, area fugitive) ***Process Point***	Pollutant Class and Form (organic/inorganic - particulate/vapor) ***Inorganic/Particulate***
Concentration in Emission Stream (ppmv) ***$6.15x10^{-6}$***	Vapor Pressure (in. Hg @ °F) ***0 in Hg @ 77°F***
Solubility ***Insoluble in water***	Molecular Weight (lb/lb-mole)
Absorptive Properties -	

Pollutant Emitted ***Beryllium***	Chemical Abstract Services (CAS) Number ***7440-41-7***
Proposed Emission Rate (lb/hr) ***$6.50x10^{-7}$***	Emission Source (describe) ***Process Point***
Source Classification (process point, process fugitive, area fugitive) ***Process Point***	Pollutant Class and Form (organic/inorganic - particulate/vapor) ***Inorganic/Particulate***
Concentration in Emission Stream (ppmv) ***$3.33x10^{-5}$***	Vapor Pressure (in. Hg @ °F) ***0 in Hg @ 77°F***
Solubility ***Insoluble in water***	Molecular Weight (lb/lb-mole) ***9.01***
Absorptive Properties -	

Pollutant Emitted ***Cadmium***	Chemical Abstract Services (CAS) Number ***7440-43-9***
Proposed Emission Rate (lb/hr) ***$5.50x10^{-6}$***	Emission Source (describe) ***Process Point***
Source Classification (process point, process fugitive, area fugitive) ***Process Point***	Pollutant Class and Form (organic/inorganic - particulate/vapor) ***Inorganic/Particulate***
Concentration in Emission Stream (ppmv) ***$2.26x10^{-5}$***	Vapor Pressure (in. Hg @ °F) ***0 in Hg@ 77°F***
Solubility ***Insoluble in water***	Molecular Weight (lb/lb-mole)
Absorptive Properties -	

Pollutant Emitted ***Chromium (hexavalent)***	Chemical Abstract Services (CAS) Number ***1333-82-0***
Proposed Emission Rate (lb/hr) ***$1.40x10^{-6}$***	Emission Source (describe) ***Process Point***
Source Classification (process point, process fugitive, area fugitive) ***Process Point***	Pollutant Class and Form (organic/inorganic - particulate/vapor) ***Inorganic/Particulate***
Concentration in Emission Stream (ppmv) ***$1.24x10^{-5}$***	Vapor Pressure (in. Hg @ °F) ***0 in Hg @77°F***
Solubility ***1,660 g/L in water @ 77°F***	Molecular Weight (lb/lb-mole) ***51.99***
Absorptive Properties -	

Pollutant Emitted ***Chromium***	Chemical Abstract Services (CAS) Number ***7440-47-3***
Proposed Emission Rate (lb/hr) ***$7.00x10^{-6}$***	Emission Source (describe) ***Process Point***
Source Classification (process point, process fugitive, area fugitive) ***Process Point***	Pollutant Class and Form (organic/inorganic - particulate/vapor) ***Inorganic/Particulate***
Concentration in Emission Stream (ppmv) ***$6.21x10^{-5}$***	Vapor Pressure (in. Hg @ °F) ***0 in Hg @ 77°F***
Solubility ***Insoluble in water***	Molecular Weight (lb/lb-mole) ***51.99***
Absorptive Properties -	

Pollutant Emitted ***Cobalt***	Chemical Abstract Services (CAS) Number ***7440-48-4***
Proposed Emission Rate (lb/hr) ***$4.10x10^{-7}$***	Emission Source (describe) ***Process Point***
Source Classification (process point, process fugitive, area fugitive) ***Process Point***	Pollutant Class and Form (organic/inorganic - particulate/vapor) ***Inorganic/Particulate***
Concentration in Emission Stream (ppmv) ***$3.21x10^{-6}$***	Vapor Pressure (in. Hg @ °F) ***0 in Hg @ 77°F***
Solubility ***Insoluble in water***	Molecular Weight (lb/lb-mole) ***58.93***
Absorptive Properties -	

Pollutant Emitted ***Manganese***	Chemical Abstract Services (CAS) Number
Proposed Emission Rate (lb/hr) ***$1.85x10^{-6}$***	Emission Source (describe) ***Process Point***
Source Classification (process point, process fugitive, area fugitive) ***Process Point***	Pollutant Class and Form (organic/inorganic - particulate/vapor) ***Inorganic/Particulate***
Concentration in Emission Stream (ppmv) ***$1.55x10^{-5}$***	Vapor Pressure (in. Hg @ °F) ***0 in Hg @ 77 °F***
Solubility ***Insoluble in water***	Molecular Weight (lb/lb-mole) ***54.94***
Absorptive Properties -	

Pollutant Emitted ***Mercury***	Chemical Abstract Services (CAS) Number ***7439-97-6***
Proposed Emission Rate (lb/hr) ***$1.25x10^{-6}$***	Emission Source (describe) ***Process Point***
Source Classification (process point, process fugitive, area fugitive) ***Process Point***	Pollutant Class and Form (organic/inorganic - particulate/vapor) ***Inorganic/Particulate***
Concentration in Emission Stream (ppmv) ***$2.87x10^{-6}$***	Vapor Pressure (in. Hg @ °F) ***$7.85x10^{-5}$ in Hg @ 77 °F***
Solubility ***Insoluble in water***	Molecular Weight (lb/lb-mole) ***200.59***
Absorptive Properties -	

Pollutant Emitted ***Nickel***	Chemical Abstract Services (CAS) Number ***7044-02-0***
Proposed Emission Rate (lb/hr) ***$1.05x10^{-5}$***	Emission Source (describe) ***Process Point***
Source Classification (process point, process fugitive, area fugitive) ***Process Point***	Pollutant Class and Form (organic/inorganic - particulate/vapor) ***Inorganic/Particulate***
Concentration in Emission Stream (ppmv) ***$8.25x10^{-5}$***	Vapor Pressure (in. Hg @ °F) ***0 in Hg Q 77°F***
Solubility ***Insoluble in water***	Molecular Weight (lb/lb-mole) ***58.69***
Absorptive Properties -	

Pollutant Emitted ***Selenium***	Chemical Abstract Services (CAS) Number ***7782-49-2***
Proposed Emission Rate (lb/hr) ***$4.40x10^{-6}$***	Emission Source (describe) ***Process Point***
Source Classification (process point, process fugitive, area fugitive) ***Process Point***	Pollutant Class and Form (organic/inorganic - particulate/vapor) ***Inorganic/Particulate***
Concentration in Emission Stream (ppmv) ***$2.57x10^{-5}$***	Vapor Pressure (in. Hg @ °F) ***0.29 in Hg @ 807***
Solubility ***Insoluble in water***	Molecular Weight (lb/lb-mole) ***78.96***
Absorptive Properties -	

Signature of Applicant	Date 09/26/2016

SEND COMPLETED APPLICATION AND ALL ATTACHMENTS TO:

North Dakota Department of
Health Division of Air Quality
918 E Divide Ave., 2nd Floor
Bismarck, ND 58501-1947
(701) 328-5188

PERMIT APPLICATION FOR
HAZARDOUS AIR POLLUTANT (HAP) SOURCES

NORTH DAKOTA DEPARTMENT OF HEALTH
DIVISION OF AIR QUALITY
SFN 8329 (09-12)

SECTION A1 - APPLICANT INFORMATION

Name of Firm or Organization ***Meridian Energy Group - Davis Refinery***		
Applicant's Name ***Tom Williams***		
Title ***VP of Planning &Permitting***	Telephone Number ***(707) 299-0182***	E-mail Address ***twilliams@meridianenergygroup.inc***
Mailing Address (Street & No.) ***2062 Business Center Drive, Suite 115***		
City ***Irvine***	State ***CA***	ZIP Code ***92612***

SECTION A2 - FACILITY INFORMATION

Contact Person for Air Pollution Matters ***Tom Johnson***		
Title ***Vice President of Operations***	Telephone Number ***(409)795-0792***	E-mail Address ***tjohnson@meridianenergygroup.inc***
Facility Address (Street & No. or Lat/Long to Nearest Second) ***37th Street / 46°52'45"N/103°14'55" W***		
City ***Belfield***	State ***ND***	ZIP Code ***58622***
County ***Billings***	Number of Employees at Location ***TBD***	
Land Area at Plant Site ***261*** Acres (or) Sq. Ft.	MSL Elevation at Plant ***2,685 feet***	

Describe Nature of Business/Process ***Petroleum Refining / Catalytic Reforming Unit / 107-H-0701***

SECTION B – STACK DATA

Inside Diameter (ft) ***6.0***	Height Above Grade (ft) ***42.0***	
Gas Temperature at Exit (°F) ***787.7***	Gas Velocity at Exit (ft/sec) ***27.2***	Gas Volume (scfm) ***19,541.61***
Basis of any Estimates (attach separate sheet if necessary) ***Engineering Calculation Notes and emission factors from Table 5-6 of the Emissions Estimation Protocol for Petroleum Refineries. See Document P-5715043-01-001-18042-I001 "EMISSIONS INVENTORY" and P-5715043-01-001-18035-I001 "BACT Analysis"***		
Are Emission Control Devices in Place? If YES – Complete SFN 8532	Yes ☐	No ☒
Nearest Residences or Building ***Utility building***	Distance (ft) ***268.4 ft***	Direction ***South***
Nearest Property Line ***Fenceline***	Distance (ft) ***810 ft***	Direction ***Southeast***

SECTION C – EMISSION STREAM DATA

Source ID No. From SFN 8516 ***107-H-0701***	Mean Particle Diameter (μm) ***TBD***
Flow Rate (scfm) ***19,541.61***	Drift Velocity (ft/sec) ***27.2***
Stream Temperature (°F) ***787.7***	Particulate Concentration (gr/dscf) ***TBD***
Moisture Content (%) ***N/A***	Halogens or Metals Present? ***N/A***
Pressure (in. Hg) ***TBD***	Organic Content (ppmv) ***2.67×10^{-8}***
Heat Content (Btu/scfm) ***TBD***	O_2 Content (%) ***N/A***

SECTION D – POLLUTANT SPECIFIC DATA
(Complete One Box for Each Pollutant in Emission Stream)

Pollutant Emitted ***Benzene***	Chemical Abstract Services (CAS) Number ***71-43-2***
Proposed Emission Rate (lb/hr) ***1.46×10^{-3}***	Emission Source (describe) ***Process Point***
Source Classification (process point, process fugitive, area fugitive) ***Process Point***	Pollutant Class and Form (organic/inorganic - particulate/vapor) ***Organic/Vapor***
Concentration in Emission Stream (ppmv) ***6.17×10^{-3}***	Vapor Pressure (in. Hg @ °F) ***3.73 in Hg @ 77 °F***
Solubility ***In water 1.79×10^{3} mg/L @ 77 °F***	Molecular Weight (lb/lb-mole) ***78.11***
Absorptive Properties -	

Pollutant Emitted ***Naphthalene***	Chemical Abstract Services (CAS) Number ***91-20-3***
Proposed Emission Rate (lb/hr) ***1.28×10^{-5}***	Emission Source (describe) ***Process Point***
Source Classification (process point, process fugitive, area fugitive) ***Process Point***	Pollutant Class and Form (organic/inorganic - particulate/vapor) ***Organic/Vapor***
Concentration in Emission Stream (ppmv) ***3.29×10^{-5}***	Vapor Pressure (in. Hg @ °F) ***0.003 in Hg @ 77 °F***
Solubility ***In water 31 mg/L @ 77 °F***	Molecular Weight (lb/lb-mole) ***128.17***
Absorptive Properties -	

Pollutant Emitted ***Toluene***	Chemical Abstract Services (CAS) Number ***108-88-3***
Proposed Emission Rate (lb/hr) ***3.50×10^{-3}***	Emission Source (describe) ***Process Point***
Source Classification (process point, process fugitive, area fugitive) ***Process Point***	Pollutant Class and Form (organic/inorganic - particulate/vapor) ***Organic/Vapor***
Concentration in Emission Stream (ppmv) ***1.26×10^{-2}***	Vapor Pressure (in. Hg @ °F) ***1.11 in Hg @ 77 °F***
Solubility ***In water 526 mg/L @ 77 °F***	Molecular Weight (lb/lb-mole) ***92.14***
Absorptive Properties -	

Pollutant Emitted ***Xylene***	Chemical Abstract Services (CAS) Number ***95-47-6***
Proposed Emission Rate (lb/hr) ***$2.56x10^{-3}$***	Emission Source (describe) ***Process Point***
Source Classification (process point, process fugitive, area fugitive) ***Process Point***	Pollutant Class and Form (organic/inorganic - particulate/vapor) ***Organic/Vapor***
Concentration in Emission Stream (ppmv) ***7.94×10^{-3}***	Vapor Pressure (in. Hg @ °F) ***0.26 in Hg @ 77°F***
Solubility ***In water 178 mg/L @ 77°F***	Molecular Weight (lb/lb-mole) ***106.16***
Absorptive Properties -	

Pollutant Emitted ***Poly Aromatic Hydrocarbons (PAH)***	Chemical Abstract Services (CAS) Number ***N/A***
Proposed Emission Rate (lb/hr) ***$8.78 x10^{-7}$***	Emission Source (describe) ***Process Point***
Source Classification (process point, process fugitive, area fugitive) ***Process Point***	Pollutant Class and Form (organic/inorganic - particulate/vapor) ***Organic/Vapor***
Concentration in Emission Stream (ppmv) ***1.85×10^{-6}***	Vapor Pressure (in. Hg @ °F) ***TBD***
Solubility ***TBD***	Molecular Weight (lb/lb-mole) ***TBD***
Absorptive Properties -	

Pollutant Emitted ***Hydrogen Chloride***	Chemical Abstract Services (CAS) Number ***7647-01-0***
Proposed Emission Rate (lb/hr) ***1.53***	Emission Source (describe) ***Process Point***
Source Classification (process point, process fugitive, area fugitive) ***Process Point***	Pollutant Class and Form (organic/inorganic - particulate/vapor) ***Inorganic/ Vapor***
Concentration in Emission Stream (ppmv) ***$1.39 \times 10^{+1}$***	Vapor Pressure (in. Hg @ °F) ***1.39 in Hg @ 77 °F***
Solubility ***67.3 g/100 mL of water @ 86 °F***	Molecular Weight (lb/lb-mole) ***36.46***
Absorptive Properties -	

Pollutant Emitted ***Chlorine***	Chemical Abstract Services (CAS) Number ***7782-50-5***
Proposed Emission Rate (lb/hr) ***0.08***	Emission Source (describe) ***Process Point***
Source Classification (process point, process fugitive, area fugitive) ***Process Point***	Pollutant Class and Form (organic/inorganic - particulate/vapor) ***Inorganic/ Vapor***
Concentration in Emission Stream (ppmv) ***$3.91x10^{-1}$***	Vapor Pressure (in. Hg @ °F) ***229.52 in Hg @ 77°F***
Solubility ***6.30 mg/L @ 77°F***	Molecular Weight (lb/lb-mole) ***70.91***
Absorptive Properties -	

Pollutant Emitted ***Dioxin Toxic Equivalents (TEQ)b***	Chemical Abstract Services (CAS) Number ***N/A***
Proposed Emission Rate (lb/hr) ***2.08 x10^{-9}***	Emission Source (describe) ***Process Point***
Source Classification (process point, process fugitive, area fugitive) ***Process Point***	Pollutant Class and Form (organic/inorganic - particulate/vapor) ***Organic/ Vapor***
Concentration in Emission Stream (ppmv) ***N/A***	Vapor Pressure (in. Hg @ °F) ***TBD***
Solubility ***TBD***	Molecular Weight (lb/lb-mole) ***TBD***
Absorptive Properties -	

Pollutant Emitted ***Total Polychlorinated biphenyls (PCB)***	Chemical Abstract Services (CAS) Number ***1336-36-3***
Proposed Emission Rate (lb/hr) ***9.49 x10^{-7}***	Emission Source (describe) ***Process Point***
Source Classification (process point, process fugitive, area fugitive) ***Process Point***	Pollutant Class and Form (organic/inorganic - particulate/vapor) ***Organic/ Vapor***
Concentration in Emission Stream (ppmv) ***N/A***	Vapor Pressure (in. Hg @ °F) ***TBD***
Solubility ***Insoluble in water***	Molecular Weight (lb/lb-mole) ***291.98***
Absorptive Properties -	

Signature of Applicant	Date 09/26/2016

SEND COMPLETED APPLICATION AND ALL ATTACHMENTS TO:

North Dakota Department of Health
Division of Air Quality
918 E Divide Ave., 2nd Floor
Bismarck, ND 58501-1947
(701) 328-5188

PERMIT APPLICATION FOR
HAZARDOUS AIR POLLUTANT (HAP) SOURCES

NORTH DAKOTA DEPARTMENT OF HEALTH
DIVISION OF AIR QUALITY
SFN 8329 (09-12)

SECTION A1 - APPLICANT INFORMATION

Name of Firm or Organization ***Meridian Energy Group - Davis Refinery***		
Applicant's Name ***Tom Williams***		
Title ***VP of Planning &Permitting***	Telephone Number ***(707) 299-0182***	E-mail Address ***twilliams@meridianenergygroup.inc***
Mailing Address (Street & No.) ***2062 Business Center Drive, Suite 115***		
City ***Irvine***	State ***CA***	ZIP Code ***92612***

SECTION A2 - FACILITY INFORMATION

Contact Person for Air Pollution Matters ***Tom Johnson***		
Title ***Vice President of Operations***	Telephone Number ***(409)795-0792***	E-mail Address ***tjohnson@meridianenergygroup.inc***
Facility Address (Street & No. or Lat/Long to Nearest Second) ***37th Street / 46°52'45"N/103°14'55" W***		
City ***Belfield***	State ***ND***	ZIP Code ***58622***
County ***Billings***	Number of Employees at Location ***TBD***	
Land Area at Plant Site ***261*** Acres (or) Sq. Ft.	MSL Elevation at Plant ***2,685 feet***	

Describe Nature of Business/Process ***Petroleum Refining / Catalytic Reforming Unit / 106-H-0601***

SECTION B – STACK DATA

Inside Diameter (ft) ***4.0***	Height Above Grade (ft) ***42.0***	
Gas Temperature at Exit (°F) ***786.2***	Gas Velocity at Exit (ft/sec) ***27.5***	Gas Volume (scfm) ***8,796.80***
Basis of any Estimates (attach separate sheet if necessary) ***Engineering Calculation Notes and emission factors from Table 5-6 of the Emissions Estimation Protocol for Petroleum Refineries. See Document P-5715043-01-001-18042-I001 "EMISSIONS INVENTORY" and P-5715043-01-001-18035-I001 "BACT Analysis"***		
Are Emission Control Devices in Place? If YES – Complete SFN 8532		Yes ☐ No ☒
Nearest Residences or Building ***Utility building***	Distance (ft) ***228 ft***	Direction ***South***
Nearest Property Line ***Fenceline***	Distance (ft) ***657 ft***	Direction ***Southeast***

SECTION C – EMISSION STREAM DATA

Source ID No. From SFN 8516 ***106-H-0601***	Mean Particle Diameter (μm) ***TBD***
Flow Rate (scfm) ***8,796.80***	Drift Velocity (ft/sec) ***27.5***
Stream Temperature (°F) ***786.2***	Particulate Concentration (gr/dscf) ***TBD***
Moisture Content (%) ***N/A***	Halogens or Metals Present? ***N/A***
Pressure (in. Hg) ***TBD***	Organic Content (ppmv) ***2.67×10^{-8}***
Heat Content (Btu/scfm) ***TBD***	O_2 Content (%) ***N/A***

SECTION D – POLLUTANT SPECIFIC DATA
(Complete One Box for Each Pollutant in Emission Stream)

Pollutant Emitted ***Benzene***	Chemical Abstract Services (CAS) Number ***71-43-2***
Proposed Emission Rate (lb/hr) ***6.60×10^{-4}***	Emission Source (describe) ***Process Point***
Source Classification (process point, process fugitive, area fugitive) ***Process Point***	Pollutant Class and Form (organic/inorganic - particulate/vapor) ***Organic/Vapor***
Concentration in Emission Stream (ppmv) ***6.17×10^{-3}***	Vapor Pressure (in. Hg @ °F) ***3.73 in Hg @ 77 °F***
Solubility ***In water 1.79×10^{3} mg/L @ 77 °F***	Molecular Weight (lb/lb-mole) ***78.11***
Absorptive Properties -	

Pollutant Emitted ***Naphthalene***	Chemical Abstract Services (CAS) Number ***91-20-3***
Proposed Emission Rate (lb/hr) ***5.78×10^{-6}***	Emission Source (describe) ***Process Point***
Source Classification (process point, process fugitive, area fugitive) ***Process Point***	Pollutant Class and Form (organic/inorganic - particulate/vapor) ***Organic/Vapor***
Concentration in Emission Stream (ppmv) ***3.29×10^{-5}***	Vapor Pressure (in. Hg @ °F) ***0.003 in Hg @ 77 °F***
Solubility ***In water 31 mg/L @ 77 °F***	Molecular Weight (lb/lb-mole) ***128.17***
Absorptive Properties -	

Pollutant Emitted ***Toluene***	Chemical Abstract Services (CAS) Number ***108-88-3***
Proposed Emission Rate (lb/hr) ***1.58×10^{-3}***	Emission Source (describe) ***Process Point***
Source Classification (process point, process fugitive, area fugitive) ***Process Point***	Pollutant Class and Form (organic/inorganic - particulate/vapor) ***Organic/Vapor***
Concentration in Emission Stream (ppmv) ***1.26×10^{-2}***	Vapor Pressure (in. Hg @ °F) ***1.11 in Hg @ 77 °F***
Solubility ***In water 526 mg/L @ 77 °F***	Molecular Weight (lb/lb-mole) ***92.14***
Absorptive Properties -	

Pollutant Emitted ***Xylene***	Chemical Abstract Services (CAS) Number ***95-47-6***
Proposed Emission Rate (lb/hr) ***$1.16x10^{-3}$***	Emission Source (describe) ***Process Point***
Source Classification (process point, process fugitive, area fugitive) ***Process Point***	Pollutant Class and Form (organic/inorganic - particulate/vapor) ***Organic/Vapor***
Concentration in Emission Stream (ppmv) ***7.95×10^{-3}***	Vapor Pressure (in. Hg @ °F) ***0.26 in Hg @ 77°F***
Solubility ***In water 178 mg/L @ 77°F***	Molecular Weight (lb/lb-mole) ***106.16***
Absorptive Properties -	

Pollutant Emitted ***Poly Aromatic Hydrocarbons (PAH)***	Chemical Abstract Services (CAS) Number ***N/A***
Proposed Emission Rate (lb/hr) ***$3.97 x10^{-7}$***	Emission Source (describe) ***Process Point***
Source Classification (process point, process fugitive, area fugitive) ***Process Point***	Pollutant Class and Form (organic/inorganic - particulate/vapor) ***Organic/Vapor***
Concentration in Emission Stream (ppmv) ***1.85×10^{-6}***	Vapor Pressure (in. Hg @ °F) ***TBD***
Solubility ***TBD***	Molecular Weight (lb/lb-mole) ***TBD***
Absorptive Properties -	

Pollutant Emitted ***Hydrogen Chloride***	Chemical Abstract Services (CAS) Number ***7647-01-0***
Proposed Emission Rate (lb/hr) ***0.69***	Emission Source (describe) ***Process Point***
Source Classification (process point, process fugitive, area fugitive) ***Process Point***	Pollutant Class and Form (organic/inorganic - particulate/vapor) ***Inorganic/ Vapor***
Concentration in Emission Stream (ppmv) ***$1.39 \times 10^{+1}$***	Vapor Pressure (in. Hg @ °F) ***1.39 in Hg @ 77 °F***
Solubility ***67.3 g/100 mL of water @ 86 °F***	Molecular Weight (lb/lb-mole) ***36.46***
Absorptive Properties -	

Pollutant Emitted ***Chlorine***	Chemical Abstract Services (CAS) Number ***7782-50-5***
Proposed Emission Rate (lb/hr) ***0.04***	Emission Source (describe) ***Process Point***
Source Classification (process point, process fugitive, area fugitive) ***Process Point***	Pollutant Class and Form (organic/inorganic - particulate/vapor) ***Inorganic/ Vapor***
Concentration in Emission Stream (ppmv) ***$3.91x10^{-1}$***	Vapor Pressure (in. Hg @ °F) ***229.52 in Hg @ 77°F***
Solubility ***6.30 mg/L @ 77°F***	Molecular Weight (lb/lb-mole) ***70.91***
Absorptive Properties -	

Pollutant Emitted ***Dioxin Toxic Equivalents (TEQ)b***	Chemical Abstract Services (CAS) Number ***N/A***
Proposed Emission Rate (lb/hr) ***9.41 x10^{-10}***	Emission Source (describe) ***Process Point***
Source Classification (process point, process fugitive, area fugitive) ***Process Point***	Pollutant Class and Form (organic/inorganic - particulate/vapor) ***Organic/ Vapor***
Concentration in Emission Stream (ppmv) ***N/A***	Vapor Pressure (in. Hg @ °F) ***TBD***
Solubility ***TBD***	Molecular Weight (lb/lb-mole) ***TBD***
Absorptive Properties -	

Pollutant Emitted ***Total Polychlorinated biphenyls (PCB)***	Chemical Abstract Services (CAS) Number ***1336-36-3***
Proposed Emission Rate (lb/hr) ***4.29 x10^{-7}***	Emission Source (describe) ***Process Point***
Source Classification (process point, process fugitive, area fugitive) ***Process Point***	Pollutant Class and Form (organic/inorganic - particulate/vapor) ***Organic/ Vapor***
Concentration in Emission Stream (ppmv) ***N/A***	Vapor Pressure (in. Hg @ °F) ***TBD***
Solubility ***Insoluble in water***	Molecular Weight (lb/lb-mole) ***291.98***
Absorptive Properties -	

Signature of Applicant	Date 09/26/2016

SEND COMPLETED APPLICATION AND ALL ATTACHMENTS TO:

North Dakota Department of Health
Division of Air Quality
918 E Divide Ave., 2nd Floor
Bismarck, ND 58501-1947
(701) 328-5188

PERMIT APPLICATION FOR
HAZARDOUS AIR POLLUTANT (HAP) SOURCES

NORTH DAKOTA DEPARTMENT OF HEALTH
DIVISION OF AIR QUALITY
SFN 8329 (09-12)

SECTION A1 - APPLICANT INFORMATION

Name of Firm or Organization ***Meridian Energy Group - Davis Refinery***		
Applicant's Name ***Tom Williams***		
Title ***VP of Planning &Permitting***	Telephone Number ***(707) 299-0182***	E-mail Address ***twilliams@meridianenergygroup.inc***
Mailing Address (Street & No.) ***2062 Business Center Drive, Suite 115***		
City ***Irvine***	State ***CA***	ZIP Code ***92612***

SECTION A2 - FACILITY INFORMATION

Contact Person for Air Pollution Matters ***Tom Johnson***		
Title ***Vice President of Operations***	Telephone Number ***(409)795-0792***	E-mail Address ***tjohnson@meridianenergygroup.inc***
Facility Address (Street & No. or Lat/Long to Nearest Second) ***37th Street / 46°52'45"N/103°14'55" W***		
City ***Belfield***	State ***ND***	ZIP Code ***58622***
County ***Billings***	Number of Employees at Location ***TBD***	
Land Area at Plant Site ***261*** Acres (or) Sq. Ft.	MSL Elevation at Plant ***2,685 feet***	

Describe Nature of Business/Process ***Petroleum Refining / Firewater Diesel Pump***

SECTION B – STACK DATA

Inside Diameter (ft) ***TBD***	Height Above Grade (ft) ***TBD***	
Gas Temperature at Exit (°F) ***TBD***	Gas Velocity at Exit (ft/sec) ***TBD***	Gas Volume (scfm) ***TBD***
Basis of any Estimates (attach separate sheet if necessary) ***Emission factors From AP-42 Chapter 3 Section 3.4. Large Stationary Diesel And All Stationary Dual-fuel Engines. See Document P-5715043-01-001-18042-I001 "EMISSIONS INVENTORY" and P-5715043-01-001-18035-I001 "BACT Analysis"***		
Are Emission Control Devices in Place? If YES – Complete SFN 8532		Yes ☐ No ☒
Nearest Residences or Building ***Administrative building***	Distance (ft) ***336 ft***	Direction ***South***
Nearest Property Line ***Fenceline***	Distance (ft) ***494 ft***	Direction ***East***

SECTION C – EMISSION STREAM DATA

Source ID No. From SFN 8516 ***212-P-1201 A/B/C***	Mean Particle Diameter (μm) ***TBD***
Flow Rate (scfm) ***TBD***	Drift Velocity (ft/sec) ***TBD***
Stream Temperature (°F) ***TBD***	Particulate Concentration (gr/dscf) ***TBD***
Moisture Content (%) ***TBD***	Halogens or Metals Present? ***N/A***
Pressure (in. Hg) ***TBD***	Organic Content (ppmv) ***TBD***
Heat Content (Btu/scfm) ***TBD***	O_2 Content (%) ***N/A***

SECTION D – POLLUTANT SPECIFIC DATA
(Complete One Box for Each Pollutant in Emission Stream)

Pollutant Emitted ***Acetaldehyde***	Chemical Abstract Services (CAS) Number ***75-07-0***
Proposed Emission Rate (lb/hr) ***$3.45x10^{-4}$***	Emission Source (describe) ***Process Point***
Source Classification (process point, process fugitive, area fugitive) ***Process Point***	Pollutant Class and Form (organic/inorganic - particulate/vapor) ***Organic Vapor***
Concentration in Emission Stream (ppmv) ***TBD***	Vapor Pressure (in. Hg @ °F) ***35.51 in Hg @ 68°C***
Solubility ***$1x10^{+6}$ mg/L in water @ 77°F***	Molecular Weight (lb/lb-mole) ***44.05***
Absorptive Properties -	

Pollutant Emitted ***Acrolein***	Chemical Abstract Services (CAS) Number ***107-02-8***
Proposed Emission Rate (lb/hr) ***$1.08x10^{-4}$***	Emission Source (describe) ***Process Point***
Source Classification (process point, process fugitive, area fugitive) ***Process Point***	Pollutant Class and Form (organic/inorganic - particulate/vapor) ***Organic /Vapor***
Concentration in Emission Stream (ppmv) ***TBD***	Vapor Pressure (in. Hg @ °F) ***10.79 in Hg @ 77 °F***
Solubility ***In water 2.12 x 10^5 mg/L @ 77°F***	Molecular Weight (lb/lb-mole) ***56.06***
Absorptive Properties -	

Pollutant Emitted ***Benzene***	Chemical Abstract Services (CAS) Number ***71-43-2***
Proposed Emission Rate (lb/hr) ***$1.06x10^{-2}$***	Emission Source (describe) ***Process Point***
Source Classification (process point, process fugitive, area fugitive) ***Process Point***	Pollutant Class and Form (organic/inorganic - particulate/vapor) ***Organic /Vapor***
Concentration in Emission Stream (ppmv) ***TBD***	Vapor Pressure (in. Hg @ °F) ***3.73 in Hg @ 77 °F***
Solubility ***In water $1.79x10^3$ mg/L @ 77 °F***	Molecular Weight (lb/lb-mole) ***78.11***
Absorptive Properties -	

Pollutant Emitted ***Formaldehyde***	Chemical Abstract Services (CAS) Number ***50-00-0***
Proposed Emission Rate (lb/hr) ***$1.08x10^{-3}$***	Emission Source (describe) ***Processo Point***
Source Classification (process point, process fugitive, area fugitive) ***Process Point***	Pollutant Class and Form (organic/inorganic - particulate/vapor) ***Organic /Vapor***
Concentration in Emission Stream (ppmv) ***TBD***	Vapor Pressure (in. Hg @ °F) ***0.15 in Hg @ 77 °F***
Solubility ***In water 4.00 $x10^{5}$ mg/L @ 68°F***	Molecular Weight (lb/lb-mole) ***30.03***
Absorptive Properties -	

Pollutant Emitted ***Naphthalene***	Chemical Abstract Services (CAS) Number ***91-20-3***
Proposed Emission Rate (lb/hr) ***$1.78x10^{-3}$***	Emission Source (describe) ***Process Point***
Source Classification (process point, process fugitive, area fugitive) ***Process Point***	Pollutant Class and Form (organic/inorganic - particulate/vapor) ***Organic /Vapor***
Concentration in Emission Stream (ppmv) ***TBD***	Vapor Pressure (in. Hg @ °F) ***0.003 in Hg @ 77 °F***
Solubility ***In water 31 mg/L @ 77 °F***	Molecular Weight (lb/lb-mole) ***128.17***
Absorptive Properties -	

Pollutant Emitted ***Propylene***	Chemical Abstract Services (CAS) Number ***115-07-1***
Proposed Emission Rate (lb/hr) ***$3.82x10^{-2}$***	Emission Source (describe) ***Process Point***
Source Classification (process point, process fugitive, area fugitive) ***Process Point***	Pollutant Class and Form (organic/inorganic - particulate/vapor) ***Organic /Vapor***
Concentration in Emission Stream (ppmv) ***TBD***	Vapor Pressure (in. Hg @ °F) ***342.12 in Hg @ 77 °F***
Solubility ***In water 200 mg/L @ 77°F***	Molecular Weight (lb/lb-mole) ***42.08***
Absorptive Properties -	

Pollutant Emitted ***Toluene***	Chemical Abstract Services (CAS) Number ***108-88-3***
Proposed Emission Rate (lb/hr) ***$3.85x10^{-3}$***	Emission Source (describe) ***Process Point***
Source Classification (process point, process fugitive, area fugitive) ***Process Point***	Pollutant Class and Form (organic/inorganic - particulate/vapor) ***Organic /Vapor***
Concentration in Emission Stream (ppmv) ***TBD***	Vapor Pressure (in. Hg @ °F) ***1.12 in Hg @ 77°F***
Solubility ***In water 526 mg/L @ 77°F***	Molecular Weight (lb/lb-mole) ***92.14***
Absorptive Properties -	

Pollutant Emitted ***Xylene***	Chemical Abstract Services (CAS) Number ***95-47-6***
Proposed Emission Rate (lb/hr) ***$2.64x10^{-3}$***	Emission Source (describe) ***Process Point***
Source Classification (process point, process fugitive, area fugitive) ***Process Point***	Pollutant Class and Form (organic/inorganic - particulate/vapor) ***Organic /Vapor***
Concentration in Emission Stream (ppmv) ***TBD***	Vapor Pressure (in. Hg @ °F) ***0.26 in Hg @ 77°F***
Solubility ***In water 178 mg/L @ 77°F***	Molecular Weight (lb/lb-mole) ***106.16***
Absorptive Properties -	

Pollutant Emitted ***PAH***	Chemical Abstract Services (CAS) Number ***N/A***
Proposed Emission Rate (lb/hr) ***$1.12x10^{-3}$***	Emission Source (describe) ***Process Point***
Source Classification (process point, process fugitive, area fugitive) ***Process Point***	Pollutant Class and Form (organic/inorganic - particulate/vapor) ***Organic /Vapor***
Concentration in Emission Stream (ppmv) ***TBD***	Vapor Pressure (in. Hg @ °F) ***N/A***
Solubility ***N/A***	Molecular Weight (lb/lb-mole) ***TBD***
Absorptive Properties -	

Signature of Applicant	Date 09/26/2016

SEND COMPLETED APPLICATION AND ALL ATTACHMENTS TO:

North Dakota Department of
Health Division of Air Quality
918 E Divide Ave., 2nd Floor
Bismarck, ND 58501-1947
(701) 328-5188

PERMIT APPLICATION FOR
HAZARDOUS AIR POLLUTANT (HAP) SOURCES

NORTH DAKOTA DEPARTMENT OF HEALTH
DIVISION OF AIR QUALITY
SFN 8329 (09-12)

SECTION A1 - APPLICANT INFORMATION

Name of Firm or Organization ***Meridian Energy Group - Davis Refinery***		
Applicant's Name ***Tom Williams***		
Title ***VP of Planning &Permitting***	Telephone Number ***(707) 299-0182***	E-mail Address ***twilliams@meridianenergygroup.inc***
Mailing Address (Street & No.) ***2062 Business Center Drive, Suite 115***		
City ***Irvine***	State ***CA***	ZIP Code ***92612***

SECTION A2 - FACILITY INFORMATION

Contact Person for Air Pollution Matters ***Tom Johnson***		
Title ***Vice President of Operations***	Telephone Number ***(409)795-0792***	E-mail Address ***tjohnson@meridianenergygroup.inc***
Facility Address (Street & No. or Lat/Long to Nearest Second) ***37th Street / 46°52'45"N/103°14'55" W***		
City ***Belfield***	State ***ND***	ZIP Code ***58622***
County ***Billings***	Number of Employees at Location ***TBD***	
Land Area at Plant Site ***261*** Acres (or) Sq. Ft.	MSL Elevation at Plant ***2,685 feet***	

Describe Nature of Business/Process ***Petroleum Refining / Diesel/Natural gas-fired emergency generator set***

SECTION B – STACK DATA

Inside Diameter (ft) ***TBD***	Height Above Grade (ft) ***TBD***	
Gas Temperature at Exit (°F) ***TBD***	Gas Velocity at Exit (ft/sec) ***TBD***	Gas Volume (scfm) ***TBD***
Basis of any Estimates (attach separate sheet if necessary) ***Emission factors From AP-42 Chapter 3 Section 3.4. Large Stationary Diesel And All Stationary Dual-fuel Engines. See Document P-5715043-01-001-18042-I001 "EMISSIONS INVENTORY" and P-5715043-01-001-18035-I001 "BACT Analysis"***		
Are Emission Control Devices in Place? If YES – Complete SFN 8532		Yes ☐ No ☒
Nearest Residences or Building ***Administrative building***	Distance (ft) ***300 ft***	Direction ***East***
Nearest Property Line ***Fenceline***	Distance (ft) ***690 ft***	Direction ***East***

SECTION C – EMISSION STREAM DATA

Source ID No. From SFN 8516 ***216-EG-1601 A/B/C***	Mean Particle Diameter (μm) ***TBD***
Flow Rate (scfm) ***TBD***	Drift Velocity (ft/sec) ***TBD***
Stream Temperature (°F) ***TBD***	Particulate Concentration (gr/dscf) ***TBD***
Moisture Content (%) ***TBD***	Halogens or Metals Present? ***N/A***
Pressure (in. Hg) ***TBD***	Organic Content (ppmv) ***TBD***
Heat Content (Btu/scfm) ***TBD***	O_2 Content (%) ***N/A***

SECTION D – POLLUTANT SPECIFIC DATA
(Complete One Box for Each Pollutant in Emission Stream)

Pollutant Emitted ***Acetaldehyde***	Chemical Abstract Services (CAS) Number ***75-07-0***
Proposed Emission Rate (lb/hr) $4.38x10^{-3}$	Emission Source (describe) ***Process Point***
Source Classification (process point, process fugitive, area fugitive) ***Process Point***	Pollutant Class and Form (organic/inorganic - particulate/vapor) ***Organic Vapor***
Concentration in Emission Stream (ppmv) ***TBD***	Vapor Pressure (in. Hg @ °F) ***35.51 in Hg @ 68°C***
Solubility $1x10^{+6}$ ***mg/L in water @ 77°F***	Molecular Weight (lb/lb-mole) ***44.05***
Absorptive Properties -	

Pollutant Emitted ***Acrolein***	Chemical Abstract Services (CAS) Number ***107-02-8***
Proposed Emission Rate (lb/hr) $1.37x10^{-3}$	Emission Source (describe) ***Process Point***
Source Classification (process point, process fugitive, area fugitive) ***Process Point***	Pollutant Class and Form (organic/inorganic - particulate/vapor) ***Organic /Vapor***
Concentration in Emission Stream (ppmv) ***TBD***	Vapor Pressure (in. Hg @ °F) ***10.79 in Hg @ 77 °F***
Solubility ***In water 2.12 x*** 10^5 ***mg/L @ 77°F***	Molecular Weight (lb/lb-mole) ***56.06***
Absorptive Properties -	

Pollutant Emitted ***Benzene***	Chemical Abstract Services (CAS) Number ***71-43-2***
Proposed Emission Rate (lb/hr) $1.35x10^{-1}$	Emission Source (describe) ***Process Point***
Source Classification (process point, process fugitive, area fugitive) ***Process Point***	Pollutant Class and Form (organic/inorganic - particulate/vapor) ***Organic /Vapor***
Concentration in Emission Stream (ppmv) ***TBD***	Vapor Pressure (in. Hg @ °F) ***3.73 in Hg @ 77 °F***
Solubility ***In water*** $1.79x10^3$ ***mg/L @ 77 °F***	Molecular Weight (lb/lb-mole) ***78.11***
Absorptive Properties -	

Pollutant Emitted ***Formaldehyde***	Chemical Abstract Services (CAS) Number ***50-00-0***
Proposed Emission Rate (lb/hr) ***$1.37x10^{-2}$***	Emission Source (describe) ***Processo Point***
Source Classification (process point, process fugitive, area fugitive) ***Process Point***	Pollutant Class and Form (organic/inorganic - particulate/vapor) ***Organic /Vapor***
Concentration in Emission Stream (ppmv) ***TBD***	Vapor Pressure (in. Hg @ °F) ***0.15 in Hg @ 77 °F***
Solubility ***In water 4.00 $x10^{5}$ mg/L @ 68°F***	Molecular Weight (lb/lb-mole) ***30.03***
Absorptive Properties -	

Pollutant Emitted ***Naphthalene***	Chemical Abstract Services (CAS) Number ***91-20-3***
Proposed Emission Rate (lb/hr) ***$2.26x10^{-2}$***	Emission Source (describe) ***Process Point***
Source Classification (process point, process fugitive, area fugitive) ***Process Point***	Pollutant Class and Form (organic/inorganic - particulate/vapor) ***Organic /Vapor***
Concentration in Emission Stream (ppmv) ***TBD***	Vapor Pressure (in. Hg @ °F) ***0.003 in Hg @ 77 °F***
Solubility ***In water 31 mg/L @ 77 °F***	Molecular Weight (lb/lb-mole) ***128.17***
Absorptive Properties -	

Pollutant Emitted ***Propylene***	Chemical Abstract Services (CAS) Number ***115-07-1***
Proposed Emission Rate (lb/hr) ***$4.85x10^{-1}$***	Emission Source (describe) ***Process Point***
Source Classification (process point, process fugitive, area fugitive) ***Process Point***	Pollutant Class and Form (organic/inorganic - particulate/vapor) ***Organic /Vapor***
Concentration in Emission Stream (ppmv) ***TBD***	Vapor Pressure (in. Hg @ °F) ***342.12 in Hg @ 77 °F***
Solubility ***In water 200 mg/L @ 77°F***	Molecular Weight (lb/lb-mole) ***42.08***
Absorptive Properties -	

Pollutant Emitted ***Toluene***	Chemical Abstract Services (CAS) Number ***108-88-3***
Proposed Emission Rate (lb/hr) ***$4.89 x10^{-2}$***	Emission Source (describe) ***Process Point***
Source Classification (process point, process fugitive, area fugitive) ***Process Point***	Pollutant Class and Form (organic/inorganic - particulate/vapor) ***Organic /Vapor***
Concentration in Emission Stream (ppmv) ***TBD***	Vapor Pressure (in. Hg @ °F) ***1.12 in Hg @ 77°F***
Solubility ***In water 526 mg/L @ 77°F***	Molecular Weight (lb/lb-mole) ***92.14***
Absorptive Properties -	

Pollutant Emitted ***Xylene***	Chemical Abstract Services (CAS) Number ***95-47-6***
Proposed Emission Rate (lb/hr) ***$3.36x10^{-2}$***	Emission Source (describe) ***Process Point***
Source Classification (process point, process fugitive, area fugitive) ***Process Point***	Pollutant Class and Form (organic/inorganic - particulate/vapor) ***Organic /Vapor***
Concentration in Emission Stream (ppmv) ***TBD***	Vapor Pressure (in. Hg @ °F) ***0.26 in Hg @ 77°F***
Solubility ***In water 178 mg/L @ 77°F***	Molecular Weight (lb/lb-mole) ***106.16***
Absorptive Properties -	

Pollutant Emitted ***PAH***	Chemical Abstract Services (CAS) Number ***N/A***
Proposed Emission Rate (lb/hr) ***$1.42x10^{-2}$***	Emission Source (describe) ***Process Point***
Source Classification (process point, process fugitive, area fugitive) ***Process Point***	Pollutant Class and Form (organic/inorganic - particulate/vapor) ***Organic /Vapor***
Concentration in Emission Stream (ppmv) ***TBD***	Vapor Pressure (in. Hg @ °F) ***N/A***
Solubility ***N/A***	Molecular Weight (lb/lb-mole) ***TBD***
Absorptive Properties -	

Signature of Applicant	Date 09/26/2016

<u>SEND COMPLETED APPLICATION AND ALL ATTACHMENTS TO</u>:

North Dakota Department of
Health Division of Air Quality
918 E Divide Ave., 2nd Floor
Bismarck, ND 58501-1947
(701) 328-5188

PERMIT APPLICATION FOR
HAZARDOUS AIR POLLUTANT (HAP) SOURCES

NORTH DAKOTA DEPARTMENT OF HEALTH
DIVISION OF AIR QUALITY
SFN 8329 (09-12)

SECTION A1 - APPLICANT INFORMATION

Name of Firm or Organization ***Meridian Energy Group - Davis Refinery***		
Applicant's Name ***Tom Williams***		
Title ***VP of Planning &Permitting***	Telephone Number ***(707) 299-0182***	E-mail Address ***twilliams@meridianenergygroup.inc***
Mailing Address (Street & No.) ***2062 Business Center Drive, Suite 115***		
City ***Irvine***	State ***CA***	ZIP Code ***92612***

SECTION A2 - FACILITY INFORMATION

Contact Person for Air Pollution Matters ***Tom Johnson***		
Title ***Vice President of Operations***	Telephone Number ***(409)795-0792***	E-mail Address ***tjohnson@meridianenergygroup.inc***
Facility Address (Street & No. or Lat/Long to Nearest Second) ***37th Street / 46°52'45"N/103°14'55" W***		
City ***Belfield***	State ***ND***	ZIP Code ***58622***
County ***Billings***	Number of Employees at Location ***TBD***	
Land Area at Plant Site ***261*** Acres (or) Sq. Ft.	MSL Elevation at Plant ***2,685 feet***	

Describe Nature of Business/Process ***Petroleum Refining / Fluid Catalytic Cracking Unit***

SECTION B – STACK DATA

Inside Diameter (ft) ***4.0***	Height Above Grade (ft) ***120***	
Gas Temperature at Exit (°F) ***480***	Gas Velocity at Exit (ft/sec) ***64.8***	Gas Volume (scfm) ***28,110***
Basis of any Estimates (attach separate sheet if necessary) ***Emission factors from Table 5-4 of the Emissions Estimation Protocol for Petroleum Refineries. Metal HAPs were calculated using the Equation 5-1 and Table 5-3. See Document P-5715043-01-001-18042-I001 "EMISSIONS INVENTORY" and P-5715043-01-001-18035-I001 "BACT Analysis"***		
Are Emission Control Devices in Place? If YES – Complete SFN 8532		Yes ☒ No ☐
Nearest Residences or Building ***Utility building***	Distance (ft) ***783 ft***	Direction ***Southwest***
Nearest Property Line ***Fenceline***	Distance (ft) ***590 ft***	Direction ***South***

SECTION C – EMISSION STREAM DATA

Source ID No. From SFN 8516 ***112-VS-1201***	Mean Particle Diameter (μm) ***<10***
Flow Rate (scfm) ***28,110***	Drift Velocity (ft/sec) ***64.8***
Stream Temperature (°F) ***480***	Particulate Concentration (gr/dscf) ***TBD***
Moisture Content (%) ***TBD***	Halogens or Metals Present? ***Metals***
Pressure (in. Hg) ***TBD***	Organic Content (ppmv) ***TBD***
Heat Content (Btu/scfm) ***TBD***	O_2 Content (%) ***N/A***

SECTION D – POLLUTANT SPECIFIC DATA
(Complete One Box for Each Pollutant in Emission Stream)

Pollutant Emitted ***Acetaldehyde***	Chemical Abstract Services (CAS) Number ***75-07-0***
Proposed Emission Rate (lb/hr) $1.21x10^{-2}$	Emission Source (describe) ***Process Point***
Source Classification (process point, process fugitive, area fugitive) ***Process Point***	Pollutant Class and Form (organic/inorganic - particulate/vapor) ***Organic Vapor***
Concentration in Emission Stream (ppmv) $1.12\ x10^{-1}$	Vapor Pressure (in. Hg @ °F) ***35.51 in Hg @ 68°C***
Solubility $1x10^{+6}$ ***mg/L in water @ 77°F***	Molecular Weight (lb/lb-mole) ***44.05***
Absorptive Properties -	

Pollutant Emitted ***Acetone***	Chemical Abstract Services (CAS) Number ***67-64-1***
Proposed Emission Rate (lb/hr) $1.49x10^{-3}$	Emission Source (describe) ***Process Point***
Source Classification (process point, process fugitive, area fugitive) ***Process Point***	Pollutant Class and Form (organic/inorganic - particulate/vapor) ***Organic /Vapor***
Concentration in Emission Stream (ppmv) $1.05\ x\ 10^{-2}$	Vapor Pressure (in. Hg @ °F) ***9.09 in Hg @ 77°F***
Solubility ***Miscible in water***	Molecular Weight (lb/lb-mole) ***58.07***
Absorptive Properties -	

Pollutant Emitted ***Acrolein***	Chemical Abstract Services (CAS) Number ***107-02-8***
Proposed Emission Rate (lb/hr) $6.17x10^{-4}$	Emission Source (describe) ***Process Point***
Source Classification (process point, process fugitive, area fugitive) ***Process Point***	Pollutant Class and Form (organic/inorganic - particulate/vapor) ***Organic /Vapor***
Concentration in Emission Stream (ppmv) $4.48\ x10^{-3}$	Vapor Pressure (in. Hg @ °F) ***10.78 in Hg @ 77 °F***
Solubility ***In water*** $2.12\ x10^{5}$ ***mg/L @ 77 °F***	Molecular Weight (lb/lb-mole) ***56.06***
Absorptive Properties -	

Pollutant Emitted ***Benzene***	Chemical Abstract Services (CAS) Number ***71-43-2***
Proposed Emission Rate (lb/hr) ***$1.03x10^{-2}$***	Emission Source (describe) ***Process Point***
Source Classification (process point, process fugitive, area fugitive) ***Process Point***	Pollutant Class and Form (organic/inorganic - particulate/vapor) ***Organic /Vapor***
Concentration in Emission Stream (ppmv) ***5.53×10^{-2}***	Vapor Pressure (in. Hg @ °F) ***3.73 in Hg @ 77 °F***
Solubility ***In water $1.79x10^{3}$ mg/L @ 77 °F***	Molecular Weight (lb/lb-mole) ***78.11***
Absorptive Properties -	

Pollutant Emitted ***Bromomethane***	Chemical Abstract Services (CAS) Number ***74-83-9***
Proposed Emission Rate (lb/hr) ***$1.31x10^{-3}$***	Emission Source (describe) ***Process Point***
Source Classification (process point, process fugitive, area fugitive) ***Process Point***	Pollutant Class and Form (organic/inorganic - particulate/vapor) ***Organic /Vapor***
Concentration in Emission Stream (ppmv) ***5.61×10^{-3}***	Vapor Pressure (in. Hg @ °F) ***63.78 in Hg @ 68°F***
Solubility ***In water 15,200 mg/L @ 77°F***	Molecular Weight (lb/lb-mole) ***94.94***
Absorptive Properties -	

Pollutant Emitted ***1,3-Butadiene***	Chemical Abstract Services (CAS) Number ***106-99-0***
Proposed Emission Rate (lb/hr) ***$1.87x10^{-5}$***	Emission Source (describe) ***Process Point***
Source Classification (process point, process fugitive, area fugitive) ***Process Point***	Pollutant Class and Form (organic/inorganic - particulate/vapor) ***Organic /Vapor***
Concentration in Emission Stream (ppmv) ***1.41×10^{-4}***	Vapor Pressure (in. Hg @ °F) ***72.34 in Hg @ 68°F***
Solubility ***Insoluble in water***	Molecular Weight (lb/lb-mole) ***54.09***
Absorptive Properties -	

Pollutant Emitted ***Carbon disulfide***	Chemical Abstract Services (CAS) Number ***75-15-0***
Proposed Emission Rate (lb/hr) ***$3.46x10^{-4}$***	Emission Source (describe) ***Process Point***
Source Classification (process point, process fugitive, area fugitive) ***Process Point***	Pollutant Class and Form (organic/inorganic - particulate/vapor) ***Inorganic /Vapor***
Concentration in Emission Stream (ppmv) ***1.85×10^{-3}***	Vapor Pressure (in. Hg @ °F) ***14.4 in Hg @ 77 °F***
Solubility ***In water 2,160 mg/L @ 77°F***	Molecular Weight (lb/lb-mole) ***76.14***
Absorptive Properties -	

Pollutant Emitted ***Formaldehyde***	Chemical Abstract Services (CAS) Number ***50-00-0***
Proposed Emission Rate (lb/hr) ***$1.49x10^{-1}$***	Emission Source (describe) ***Process Point***
Source Classification (process point, process fugitive, area fugitive) ***Process Point***	Pollutant Class and Form (organic/inorganic - particulate/vapor) ***Organic /Vapor***
Concentration in Emission Stream (ppmv) ***2.03***	Vapor Pressure (in. Hg @ °F) ***153.15 in Hg @ 68°F***
Solubility ***Miscible in water***	Molecular Weight (lb/lb-mole) ***30.03***
Absorptive Properties -	

Pollutant Emitted ***Hexachlorodibenzofuran***	Chemical Abstract Services (CAS) Number ***N/A***
Proposed Emission Rate (lb/hr) ***$5.89x10^{-10}$***	Emission Source (describe) ***Process Point***
Source Classification (process point, process fugitive, area fugitive) ***Process Point***	Pollutant Class and Form (organic/inorganic - particulate/vapor) ***Organic /Vapor***
Concentration in Emission Stream (ppmv) ***6.44×10^{-10}***	Vapor Pressure (in. Hg @ °F) ***TBD***
Solubility ***TBD***	Molecular Weight (lb/lb-mole) ***374.86***
Absorptive Properties -	

Pollutant Emitted ***Heptacholorodibenzo-p-dioxin***	Chemical Abstract Services (CAS) Number ***19408-74-3***
Proposed Emission Rate (lb/hr) ***$5.23x10^{-10}$***	Emission Source (describe) ***Process Point***
Source Classification (process point, process fugitive, area fugitive) ***Process Point***	Pollutant Class and Form (organic/inorganic - particulate/vapor) ***Organic /Vapor***
Concentration in Emission Stream (ppmv) ***5.01×10^{-10}***	Vapor Pressure (in. Hg @ °F) ***1.91×10^{-12} in Hg @ 77°F***
Solubility ***Insoluble in water***	Molecular Weight (lb/lb-mole) ***390.86***
Absorptive Properties -	

Pollutant Emitted ***Hydrogen Chloride***	Chemical Abstract Services (CAS) Number ***7647-01-0***
Proposed Emission Rate (lb/hr) ***$2.06x10^{-2}$***	Emission Source (describe) ***Process Point***
Source Classification (process point, process fugitive, area fugitive) ***Process Point***	Pollutant Class and Form (organic/inorganic - particulate/vapor) ***Inorganic /Vapor***
Concentration in Emission Stream (ppmv) ***2.29×10^{-1}***	Vapor Pressure (in. Hg @ °F) ***1.39 in Hg @ 77°F***
Solubility ***Miscible in water***	Molecular Weight (lb/lb-mole) ***36.46***
Absorptive Properties -	

Pollutant Emitted ***Hydrogen Cyanide***	Chemical Abstract Services (CAS) Number ***74-90-8***
Proposed Emission Rate (lb/hr) ***$8.03x10^{-2}$***	Emission Source (describe) ***Process Point***
Source Classification (process point, process fugitive, area fugitive) ***Process Point***	Pollutant Class and Form (organic/inorganic - particulate/vapor) ***Inorganic /Vapor***
Concentration in Emission Stream (ppmv) ***1.21***	Vapor Pressure (in. Hg @ °F) ***29.21 in Hg @ 77°F***
Solubility ***In water 0.014 g/100mL @ 59 °F***	Molecular Weight (lb/lb-mole) ***27.03***
Absorptive Properties -	

Pollutant Emitted ***Ethylbenzene***	Chemical Abstract Services (CAS) Number ***100-41-4***
Proposed Emission Rate (lb/hr) ***$1.49x10^{-4}$***	Emission Source (describe) ***Process Point***
Source Classification (process point, process fugitive, area fugitive) ***Process Point***	Pollutant Class and Form (organic/inorganic - particulate/vapor) ***Organic /Vapor***
Concentration in Emission Stream (ppmv) ***$5.73x10^{-4}$***	Vapor Pressure (in. Hg @ °F) ***0.37 in Hg @ 77°F***
Solubility ***In water 0.014 g/100mL @ 59 °F***	Molecular Weight (lb/lb-mole) ***106.17***
Absorptive Properties -	

Pollutant Emitted ***Methylene Chloride***	Chemical Abstract Services (CAS) Number ***75-09-2***
Proposed Emission Rate (lb/hr) ***$4.11x10^{-3}$***	Emission Source (describe) ***Process Point***
Source Classification (process point, process fugitive, area fugitive) ***Process Point***	Pollutant Class and Form (organic/inorganic - particulate/vapor) ***Organic /Vapor***
Concentration in Emission Stream (ppmv) ***$1.97 x10^{-2}$***	Vapor Pressure (in. Hg @ °F) ***17.13 in Hg @ 77 °F***
Solubility ***In water $1.30 x10^{4}$ mg/L @ 77°F***	Molecular Weight (lb/lb-mole) ***30.03***
Absorptive Properties -	

Pollutant Emitted ***Penthachlorodibenzofurans***	Chemical Abstract Services (CAS) Number ***57117-41-6***
Proposed Emission Rate (lb/hr) ***$2.99x10^{-10}$***	Emission Source (describe) ***Process Point***
Source Classification (process point, process fugitive, area fugitive) ***Process Point***	Pollutant Class and Form (organic/inorganic - particulate/vapor) ***Organic /Vapor***
Concentration in Emission Stream (ppmv) ***$3.57x10^{-10}$***	Vapor Pressure (in. Hg @ °F) ***TBD***
Solubility ***TBD***	Molecular Weight (lb/lb-mole) ***54.09***
Absorptive Properties -	

Pollutant Emitted ***Phenol***	Chemical Abstract Services (CAS) Number ***108-95-2***
Proposed Emission Rate (lb/hr) ***$5.32x10^{-3}$***	Emission Source (describe) ***Process Point***
Source Classification (process point, process fugitive, area fugitive) ***Process Point***	Pollutant Class and Form (organic/inorganic - particulate/vapor) ***Organic /Vapor***
Concentration in Emission Stream (ppmv) ***2.30×10^{-2}***	Vapor Pressure (in. Hg @ °F) ***0.013 in Hg @ 68 °F***
Solubility ***50 to 100 mg/mL @ 66°F***	Molecular Weight (lb/lb-mole) ***94.11***
Absorptive Properties -	

Pollutant Emitted ***Naphthalene***	Chemical Abstract Services (CAS) Number ***91-20-3***
Proposed Emission Rate (lb/hr) ***$6.54x10^{-4}$***	Emission Source (describe) ***Process Point***
Source Classification (process point, process fugitive, area fugitive) ***Process Point***	Pollutant Class and Form (organic/inorganic - particulate/vapor) ***Organic /Vapor***
Concentration in Emission Stream (ppmv) ***$2.08 x10^{-3}$***	Vapor Pressure (in. Hg @ °F) ***0.003 in Hg @ 77 °F***
Solubility ***In water 31 mg/L @ 77 °F***	Molecular Weight (lb/lb-mole) ***128.17***
Absorptive Properties -	

Pollutant Emitted ***Toluene***	Chemical Abstract Services (CAS) Number ***108-88-3***
Proposed Emission Rate (lb/hr) ***$1.96x10^{-3}$***	Emission Source (describe) ***Process Point***
Source Classification (process point, process fugitive, area fugitive) ***Process Point***	Pollutant Class and Form (organic/inorganic - particulate/vapor) ***Organic /Vapor***
Concentration in Emission Stream (ppmv) ***$8.66x10^{-3}$***	Vapor Pressure (in. Hg @ °F) ***1.12 in Hg @ 77°F***
Solubility ***In water 526 mg/L @ 77°F***	Molecular Weight (lb/lb-mole) ***92.14***
Absorptive Properties -	

Pollutant Emitted ***Trichlorofluoromethane***	Chemical Abstract Services (CAS) Number ***75-69-4***
Proposed Emission Rate (lb/hr) ***$1.49x10^{-3}$***	Emission Source (describe) ***Process Point***
Source Classification (process point, process fugitive, area fugitive) ***Process Point***	Pollutant Class and Form (organic/inorganic - particulate/vapor) ***Organic /Vapor***
Concentration in Emission Stream (ppmv) ***$4.43x10^{-3}$***	Vapor Pressure (in. Hg @ °F) ***31.61 in Hg @ 77°F***
Solubility ***In water 1,100 mg/L @ 77 °F***	Molecular Weight (lb/lb-mole) ***54.09***
Absorptive Properties -	

Pollutant Emitted ***Xylene***	Chemical Abstract Services (CAS) Number ***95-47-6***
Proposed Emission Rate (lb/hr) ***$1.96x10^{-3}$***	Emission Source (describe) ***Process Point***
Source Classification (process point, process fugitive, area fugitive) ***Process Point***	Pollutant Class and Form (organic/inorganic - particulate/vapor) ***Organic /Vapor***
Concentration in Emission Stream (ppmv) ***$7.52x10^{-3}$***	Vapor Pressure (in. Hg @ °F) ***0.26 in Hg @ 77°F***
Solubility ***In water 178 mg/L @ 77°F***	Molecular Weight (lb/lb-mole) ***106.16***
Absorptive Properties -	

Pollutant Emitted ***PAH***	Chemical Abstract Services (CAS) Number ***N/A***
Proposed Emission Rate (lb/hr) ***$3.32x10^{-4}$***	Emission Source (describe) ***Process Point***
Source Classification (process point, process fugitive, area fugitive) ***Process Point***	Pollutant Class and Form (organic/inorganic - particulate/vapor) ***Organic /Vapor***
Concentration in Emission Stream (ppmv) ***$7.40x10^{-4}$***	Vapor Pressure (in. Hg @ °F) ***N/A***
Solubility ***N/A***	Molecular Weight (lb/lb-mole) ***TBD***
Absorptive Properties -	

Pollutant Emitted ***Antimony***	Chemical Abstract Services (CAS) Number ***7740-36-0***
Proposed Emission Rate (lb/hr) ***$4.08x10^{-6}$***	Emission Source (describe) ***Process Point***
Source Classification (process point, process fugitive, area fugitive) ***Process Point***	Pollutant Class and Form (organic/inorganic - particulate/vapor) ***Inorganic/particulate***
Concentration in Emission Stream (ppmv) ***$1.36x10^{-5}$***	Vapor Pressure (in. Hg @ °F) ***0 in Hg @ 77°F***
Solubility ***Insoluble in water***	Molecular Weight (lb/lb-mole) ***121.76***
Absorptive Properties -	

Pollutant Emitted ***Arsenic***	Chemical Abstract Services (CAS) Number ***7440-38-2***
Proposed Emission Rate (lb/hr) ***$6.28x10^{-7}$***	Emission Source (describe) ***Process Point***
Source Classification (process point, process fugitive, area fugitive) ***Process Point***	Pollutant Class and Form (organic/inorganic - particulate/vapor) ***Inorganic/Particulate***
Concentration in Emission Stream (ppmv) ***$3.41x10^{-6}$***	Vapor Pressure (in. Hg @ °F) ***0 in Hg @ 77°F***
Solubility ***Insoluble in water***	Molecular Weight (lb/lb-mole)
Absorptive Properties -	

Pollutant Emitted ***Beryllium***	Chemical Abstract Services (CAS) Number ***7440-41-7***
Proposed Emission Rate (lb/hr) ***$1.88x10^{-7}$***	Emission Source (describe) ***Process Point***
Source Classification (process point, process fugitive, area fugitive) ***Process Point***	Pollutant Class and Form (organic/inorganic - particulate/vapor) ***Inorganic/Particulate***
Concentration in Emission Stream (ppmv) ***$8.51x10^{-6}$***	Vapor Pressure (in. Hg @ °F) ***0 in Hg @ 77°F***
Solubility ***Insoluble in water***	Molecular Weight (lb/lb-mole) ***9.01***
Absorptive Properties -	

Pollutant Emitted ***Cadmium***	Chemical Abstract Services (CAS) Number ***7440-43-9***
Proposed Emission Rate (lb/hr) ***$8.16x10^{-7}$***	Emission Source (describe) ***Process Point***
Source Classification (process point, process fugitive, area fugitive) ***Process Point***	Pollutant Class and Form (organic/inorganic - particulate/vapor) ***Inorganic/Particulate***
Concentration in Emission Stream (ppmv) ***$2.95x10^{-6}$***	Vapor Pressure (in. Hg @ °F) ***0 in Hg@ 77°F***
Solubility ***Insoluble in water***	Molecular Weight (lb/lb-mole)
Absorptive Properties -	

Pollutant Emitted ***Chromium***	Chemical Abstract Services (CAS) Number ***7440-47-3***
Proposed Emission Rate (lb/hr) ***$1.57x10^{-5}$***	Emission Source (describe) ***Process Point***
Source Classification (process point, process fugitive, area fugitive) ***Process Point***	Pollutant Class and Form (organic/inorganic - particulate/vapor) ***Inorganic/Particulate***
Concentration in Emission Stream (ppmv) ***$1.23x10^{-4}$***	Vapor Pressure (in. Hg @ °F) ***0 in Hg @ 77°F***
Solubility ***Insoluble in water***	Molecular Weight (lb/lb-mole) ***51.99***
Absorptive Properties -	

Pollutant Emitted ***Cobalt***	Chemical Abstract Services (CAS) Number ***7440-48-4***
Proposed Emission Rate (lb/hr) ***$3.26x10^{-6}$***	Emission Source (describe) ***Process Point***
Source Classification (process point, process fugitive, area fugitive) ***Process Point***	Pollutant Class and Form (organic/inorganic - particulate/vapor) ***Inorganic/Particulate***
Concentration in Emission Stream (ppmv) ***$2.25x10^{-5}$***	Vapor Pressure (in. Hg @ °F) ***0 in Hg @ 77°F***
Solubility ***Insoluble in water***	Molecular Weight (lb/lb-mole) ***58.93***
Absorptive Properties -	

Pollutant Emitted ***Manganese***	Chemical Abstract Services (CAS) Number
Proposed Emission Rate (lb/hr) ***$8.16x10^{-6}$***	Emission Source (describe) ***Process Point***
Source Classification (process point, process fugitive, area fugitive) ***Process Point***	Pollutant Class and Form (organic/inorganic - particulate/vapor) ***Inorganic/Particulate***
Concentration in Emission Stream (ppmv) ***$6.04x10^{-5}$***	Vapor Pressure (in. Hg @ °F) ***0 in Hg @ 77 °F***
Solubility ***Insoluble in water***	Molecular Weight (lb/lb-mole) ***54.94***
Absorptive Properties -	

Pollutant Emitted ***Mercury***	Chemical Abstract Services (CAS) Number ***7439-97-6***
Proposed Emission Rate (lb/hr) ***$1.12x10^{-6}$***	Emission Source (describe) ***Process Point***
Source Classification (process point, process fugitive, area fugitive) ***Process Point***	Pollutant Class and Form (organic/inorganic - particulate/vapor) ***Inorganic/Particulate***
Concentration in Emission Stream (ppmv) ***$2.27x10^{-6}$***	Vapor Pressure (in. Hg @ °F) ***$7.85x10^{-5}$ in Hg @ 77 °F***
Solubility ***Insoluble in water***	Molecular Weight (lb/lb-mole) ***200.59***
Absorptive Properties -	

Pollutant Emitted ***Nickel***	Chemical Abstract Services (CAS) Number ***7044-02-0***
Proposed Emission Rate (lb/hr) ***$6.28x10^{-5}$***	Emission Source (describe) ***Process Point***
Source Classification (process point, process fugitive, area fugitive) ***Process Point***	Pollutant Class and Form (organic/inorganic - particulate/vapor) ***Inorganic/Particulate***
Concentration in Emission Stream (ppmv) ***$4.35x10^{-4}$***	Vapor Pressure (in. Hg @ °F) ***0 in Hg @ 77°F***
Solubility ***Insoluble in water***	Molecular Weight (lb/lb-mole) ***58.69***
Absorptive Properties -	

Pollutant Emitted ***Selenium***	Chemical Abstract Services (CAS) Number ***7782-49-2***
Proposed Emission Rate (lb/hr) ***$1.57x10^{-6}$***	Emission Source (describe) ***Process Point***
Source Classification (process point, process fugitive, area fugitive) ***Process Point***	Pollutant Class and Form (organic/inorganic - particulate/vapor) ***Inorganic/Particulate***
Concentration in Emission Stream (ppmv) ***$8.09x10^{-4}$***	Vapor Pressure (in. Hg @ °F) ***0.29 in Hg @ 807 °F***
Solubility ***Insoluble in water***	Molecular Weight (lb/lb-mole) ***78.96***
Absorptive Properties -	

Pollutant Emitted ***Vanadium***	Chemical Abstract Services (CAS) Number ***7440-62-2***
Proposed Emission Rate (lb/hr) ***$8.29x10^{-5}$***	Emission Source (describe) ***Process Point***
Source Classification (process point, process fugitive, area fugitive) ***Process Point***	Pollutant Class and Form (organic/inorganic - particulate/vapor) ***Inorganic/Particulate***
Concentration in Emission Stream (ppmv) ***$6.62x10^{-4}$***	Vapor Pressure (in. Hg @ °F) ***Approx. 0 in Hg***
Solubility ***Insoluble in water***	Molecular Weight (lb/lb-mole) ***50.94***
Absorptive Properties -	

Pollutant Emitted ***Zinc***	Chemical Abstract Services (CAS) Number ***7440-66-6***
Proposed Emission Rate (lb/hr) ***$4.65x10^{-5}$***	Emission Source (describe) ***Process Point***
Source Classification (process point, process fugitive, area fugitive) ***Process Point***	Pollutant Class and Form (organic/inorganic - particulate/vapor) ***Inorganic/Particulate***
Concentration in Emission Stream (ppmv) ***$2.89x10^{-4}$***	Vapor Pressure (in. Hg @ °F) ***2.95×10^{-8} in Hg @ 908.6***
Solubility ***Insoluble in water***	Molecular Weight (lb/lb-mole) ***65.38***
Absorptive Properties -	

Signature of Applicant	Date

SEND COMPLETED APPLICATION AND ALL ATTACHMENTS TO:

North Dakota Department of
Health Division of Air Quality
918 E Divide Ave., 2nd Floor
Bismarck, ND 58501-1947
(701) 328-5188

PERMIT APPLICATION FOR
HAZARDOUS AIR POLLUTANT (HAP) SOURCES

NORTH DAKOTA DEPARTMENT OF HEALTH
DIVISION OF AIR QUALITY
SFN 8329 (09-12)

SECTION A1 - APPLICANT INFORMATION

Name of Firm or Organization ***Meridian Energy Group - Davis Refinery***		
Applicant's Name ***Tom Williams***		
Title ***VP of Planning &Permitting***	Telephone Number ***(707) 299-0182***	E-mail Address ***twilliams@meridianenergygroup.inc***
Mailing Address (Street & No.) ***2062 Business Center Drive, Suite 115***		
City ***Irvine***	State ***CA***	ZIP Code ***92612***

SECTION A2 - FACILITY INFORMATION

Contact Person for Air Pollution Matters ***Tom Johnson***		
Title ***Vice President of Operations***	Telephone Number ***(409)795-0792***	E-mail Address ***tjohnson@meridianenergygroup.inc***
Facility Address (Street & No. or Lat/Long to Nearest Second) ***37th Street / 46°52'45"N/103°14'55" W***		
City ***Belfield***	State ***ND***	ZIP Code ***58622***
County ***Billings***	Number of Employees at Location ***TBD***	
Land Area at Plant Site ***261*** Acres (or) Sq. Ft.	MSL Elevation at Plant ***2,685 feet***	

Describe Nature of Business/Process ***Petroleum Refining / Process Leaks (Fugitive) - FUG-1***

SECTION B – STACK DATA

Inside Diameter (ft) ***N/A***	Height Above Grade (ft) ***N/A***	
Gas Temperature at Exit (°F) ***N/A***	Gas Velocity at Exit (ft/sec) ***N/A***	Gas Volume (scfm) ***N/A***
Basis of any Estimates (attach separate sheet if necessary) ***Emission factors from Tables 2-5, 2-6 and 2-7 of the Emissions Estimation Protocol for Petroleum Refineries. See Document P-5715043-01-001-18042-I001 "EMISSIONS INVENTORY" and P-5715043-01-001-18035-I001 "BACT Analysis"***		
Are Emission Control Devices in Place? If YES – Complete SFN 8532		Yes ☐ No ☒
Nearest Residences or Building ***Administrative building***	Distance (ft) ***N/A***	Direction ***N/A***
Nearest Property Line ***Fenceline***	Distance (ft) ***N/A***	Direction ***N/A***

SECTION C – EMISSION STREAM DATA

Source ID No. From SFN 8516 ***FUG-1***	Mean Particle Diameter (μm) ***N/A***
Flow Rate (scfm) ***N/A***	Drift Velocity (ft/sec) ***N/A***
Stream Temperature (°F) ***N/A***	Particulate Concentration (gr/dscf) ***N/A***
Moisture Content (%) ***N/A***	Halogens or Metals Present? ***No***
Pressure (in. Hg) ***N/A***	Organic Content (ppmv) ***N/A***
Heat Content (Btu/scfm) ***N/A***	O_2 Content (%) ***N/A***

SECTION D – POLLUTANT SPECIFIC DATA
(Complete One Box for Each Pollutant in Emission Stream)

Pollutant Emitted ***1,3-Butadiene***	Chemical Abstract Services (CAS) Number ***106-99-0***
Proposed Emission Rate (lb/hr) ***1.23×10^{-3}***	Emission Source (describe) ***Fugitive***
Source Classification (process point, process fugitive, area fugitive) ***Process Fugitive***	Pollutant Class and Form (organic/inorganic - particulate/vapor) ***Organic /Vapor***
Concentration in Emission Stream (ppmv) ***N/A***	Vapor Pressure (in. Hg @ °F) ***72.34 in Hg @ 68 °F***
Solubility ***Insoluble in water***	Molecular Weight (lb/lb-mole) ***54.09***
Absorptive Properties -	

Pollutant Emitted ***2,2,4-trimethylpentane***	Chemical Abstract Services (CAS) Number ***540-84-1***
Proposed Emission Rate (lb/hr) ***1.18×10^{-1}***	Emission Source (describe) ***Fugitive***
Source Classification (process point, process fugitive, area fugitive) ***Process Fugitive***	Pollutant Class and Form (organic/inorganic - particulate/vapor) ***Organic/Vapor***
Concentration in Emission Stream (ppmv) ***N/A***	Vapor Pressure (in. Hg @ °F) ***1.50 in Hg @ 68 °F***
Solubility ***Insoluble in water***	Molecular Weight (lb/lb-mole) ***114.22***
Absorptive Properties -	

Pollutant Emitted ***Benzene***	Chemical Abstract Services (CAS) Number ***71-43-2***
Proposed Emission Rate (lb/hr) ***3.60×10^{-2}***	Emission Source (describe) ***Fugitive***
Source Classification (process point, process fugitive, area fugitive) ***Process Fugitive***	Pollutant Class and Form (organic/inorganic - particulate/vapor) ***Organic /Vapor***
Concentration in Emission Stream (ppmv) ***N/A***	Vapor Pressure (in. Hg @ °F) ***3.73 in Hg @ 77 °F***
Solubility ***In water 1.79×10^{3} mg/L @ 77 °F***	Molecular Weight (lb/lb-mole) ***78.11***
Absorptive Properties -	

Pollutant Emitted ***Biphenyl***	Chemical Abstract Services (CAS) Number ***95-52-4***
Proposed Emission Rate (lb/hr) ***$6.01x10^{-3}$***	Emission Source (describe) ***Fugitive***
Source Classification (process point, process fugitive, area fugitive) ***Process Fugitive***	Pollutant Class and Form (organic/inorganic - particulate/vapor) ***Organic /Vapor***
Concentration in Emission Stream (ppmv) ***N/A***	Vapor Pressure (in. Hg @ °F) ***$3.51x\ 10^{-4}$ in Hg @ 77 °F***
Solubility ***In water 0.0004 g/100mL @ 68 °F***	Molecular Weight (lb/lb-mole) ***154.21***
Absorptive Properties -	

Pollutant Emitted ***1,2,4- Trimethyl benzene***	Chemical Abstract Services (CAS) Number ***95-63-6***
Proposed Emission Rate (lb/hr) ***$3.87\ x\ 10^{-2}$***	Emission Source (describe) ***Fugitive***
Source Classification (process point, process fugitive, area fugitive) ***Process Fugitive***	Pollutant Class and Form (organic/inorganic - particulate/vapor) ***Organic /Vapor***
Concentration in Emission Stream (ppmv) ***N/A***	Vapor Pressure (in. Hg @ °F) ***0.28 in Hg @ 111.92°F***
Solubility ***Insoluble in water***	Molecular Weight (lb/lb-mole) ***72.15***
Absorptive Properties -	

Pollutant Emitted ***Cumene***	Chemical Abstract Services (CAS) Number ***98-82-8***
Proposed Emission Rate (lb/hr) ***$3.36\ x10^{-3}$***	Emission Source (describe) ***Fugitive***
Source Classification (process point, process fugitive, area fugitive) ***Process Fugitive***	Pollutant Class and Form (organic/inorganic - particulate/vapor) ***Organic /Vapor***
Concentration in Emission Stream (ppmv) ***N/A***	Vapor Pressure (in. Hg @ °F) ***0.17 in Hg @ 77°F***
Solubility ***61.3 mg/L @ 77°F***	Molecular Weight (lb/lb-mole) ***120.19***
Absorptive Properties -	

Pollutant Emitted ***Ethylbenzene***	Chemical Abstract Services (CAS) Number ***100-41-4***
Proposed Emission Rate (lb/hr) ***$2.69x10^{-2}$***	Emission Source (describe) ***Fugitive***
Source Classification (process point, process fugitive, area fugitive) ***Process Fugitive***	Pollutant Class and Form (organic/inorganic - particulate/vapor) ***Organic /Vapor***
Concentration in Emission Stream (ppmv) ***N/A***	Vapor Pressure (in. Hg @ °F) ***0.37 in Hg @ 77°F***
Solubility ***In water 0.014 g/100mL @ 59 °F***	Molecular Weight (lb/lb-mole) ***106.17***
Absorptive Properties -	

Pollutant Emitted ***Hexane***	Chemical Abstract Services (CAS) Number ***110-54-5***
Proposed Emission Rate (lb/hr) ***$8.19x10^{-2}$***	Emission Source (describe) ***Fugitive***
Source Classification (process point, process fugitive, area fugitive) ***Process Fugitive***	Pollutant Class and Form (organic/inorganic - particulate/vapor) ***Organic /Vapor***
Concentration in Emission Stream (ppmv) ***N/A***	Vapor Pressure (in. Hg @ °F) ***5.90 in Hg @ 68 °F***
Solubility ***Insoluble in water***	Molecular Weight (lb/lb-mole) ***86.1***
Absorptive Properties -	

Pollutant Emitted ***Naphthalene***	Chemical Abstract Services (CAS) Number ***91-20-3***
Proposed Emission Rate (lb/hr) ***$1.28x10^{-2}$***	Emission Source (describe) ***Fugitive***
Source Classification (process point, process fugitive, area fugitive) ***Process Fugitive***	Pollutant Class and Form (organic/inorganic - particulate/vapor) ***Organic /Vapor***
Concentration in Emission Stream (ppmv) ***N/A***	Vapor Pressure (in. Hg @ °F) ***0.003 in Hg @ 77 °F***
Solubility ***In water 31 mg/L @ 77 °F***	Molecular Weight (lb/lb-mole) ***128.17***
Absorptive Properties -	

Pollutant Emitted ***Toluene***	Chemical Abstract Services (CAS) Number ***108-88-3***
Proposed Emission Rate (lb/hr) ***$1.06x10^{-1}$***	Emission Source (describe) ***Fugitive***
Source Classification (process point, process fugitive, area fugitive) ***Process fugitive***	Pollutant Class and Form (organic/inorganic - particulate/vapor) ***Organic /Vapor***
Concentration in Emission Stream (ppmv) ***TBD***	Vapor Pressure (in. Hg @ °F) ***1.12 in Hg @ 77°F***
Solubility ***In water 526 mg/L @ 77°F***	Molecular Weight (lb/lb-mole) ***92.14***
Absorptive Properties -	

Pollutant Emitted ***Xylene***	Chemical Abstract Services (CAS) Number ***95-47-6***
Proposed Emission Rate (lb/hr) ***$1.14x10^{-1}$***	Emission Source (describe) ***Fugitive***
Source Classification (process point, process fugitive, area fugitive) ***Process Fugitive***	Pollutant Class and Form (organic/inorganic - particulate/vapor) ***Organic /Vapor***
Concentration in Emission Stream (ppmv) ***N/A***	Vapor Pressure (in. Hg @ °F) ***0.26 in Hg @ 77°F***
Solubility ***In water 178 mg/L @ 77°F***	Molecular Weight (lb/lb-mole) ***106.16***
Absorptive Properties -	

Signature of Applicant	Date
	09/26/2016

SEND COMPLETED APPLICATION AND ALL ATTACHMENTS TO:

North Dakota Department of Health
Division of Air Quality
918 E Divide Ave., 2nd Floor
Bismarck, ND 58501-1947
(701) 328-5188

PERMIT APPLICATION FOR
HAZARDOUS AIR POLLUTANT (HAP) SOURCES

NORTH DAKOTA DEPARTMENT OF HEALTH
DIVISION OF AIR QUALITY
SFN 8329 (09-12)

SECTION A1 - APPLICANT INFORMATION

Name of Firm or Organization ***Meridian Energy Group - Davis Refinery***		
Applicant's Name ***Tom Williams***		
Title ***VP of Planning &Permitting***	Telephone Number ***(707) 299-0182***	E-mail Address ***twilliams@meridianenergygroup.inc***
Mailing Address (Street & No.) ***2062 Business Center Drive, Suite 115***		
City ***Irvine***	State ***CA***	ZIP Code ***92612***

SECTION A2 - FACILITY INFORMATION

Contact Person for Air Pollution Matters ***Tom Johnson***		
Title ***Vice President of Operations***	Telephone Number ***(409)795-0792***	E-mail Address ***tjohnson@meridianenergygroup.inc***
Facility Address (Street & No. or Lat/Long to Nearest Second) ***37th Street / 46°52'45"N/103°14'55" W***		
City ***Belfield***	State ***ND***	ZIP Code ***58622***
County ***Billings***	Number of Employees at Location ***TBD***	
Land Area at Plant Site ***261*** Acres (or) Sq. Ft.	MSL Elevation at Plant ***2,685 feet***	

Describe Nature of Business/Process ***Petroleum Refining / Sulfur Recovering Unit / Oxidizer Vent (OV) and Flash Drum Vent (FDV), both directed to a thermal oxidizer (122-H-2201)***

SECTION B – STACK DATA

Inside Diameter (ft) ***TBD***	Height Above Grade (ft) ***TBD***	
Gas Temperature at Exit (°F) ***125 (OV)/ 125 (FDV)***	Gas Velocity at Exit (ft/sec) ***TBD***	Gas Volume (scfm) ***3,725.69 (OV)/53.47 (FDV)***
Basis of any Estimates (attach separate sheet if necessary) ***Engineering data from vendor.***		
Are Emission Control Devices in Place? If YES – Complete SFN 8532		Yes ☒ No ☐
Nearest Residences or Building ***Utility building***	Distance (ft) ***618 ft***	Direction ***Southeast***
Nearest Property Line ***Fenceline***	Distance (ft) ***820 ft***	Direction ***Northwest***

SECTION C – EMISSION STREAM DATA

Source ID No. From SFN 8516 ***Not listed (directed to 122-H-2201)***	Mean Particle Diameter (μm) ***N/A***
Flow Rate (scfm) ***3,725.69 (OV)/ 53.47 (FDV)***	Drift Velocity (ft/sec) ***TBD***
Stream Temperature (°F) ***125 (OV)/ 125 (FDV)***	Particulate Concentration (gr/dscf) ***N/A***
Moisture Content (%) ***9.55%(OV)/ 5.88% (FDV)***	Halogens or Metals Present? ***None***
Pressure (in. Hg) ***29.92 (OV) / 50.28 (FDV)***	Organic Content (ppmv) ***0.39% molar (OV) / 81.46% molar (FDV)***
Heat Content (Btu/scfm) ***TBD***	O_2 Content (%) ***16.16% (OV)/ 0% (FDV)***

SECTION D – POLLUTANT SPECIFIC DATA
(Complete One Box for Each Pollutant in Emission Stream)

Pollutant Emitted ***Volatile Organic Compounds (VOC)***	Chemical Abstract Services (CAS) Number ***N/A***
Proposed Emission Rate (lb/hr) ***64.88 (OV) / 202.29 (FDV)***	Emission Source (describe) ***Process Point***
Source Classification (process point, process fugitive, area fugitive) ***Process Point***	Pollutant Class and Form (organic/inorganic - particulate/vapor) ***Organic/Vapor***
Concentration in Emission Stream (ppmv) ***TBD***	Vapor Pressure (in. Hg @ °F) ***N/A***
Solubility **-**	Molecular Weight (lb/lb-mole) ***N/A***
Absorptive Properties -	

Pollutant Emitted ***Hydrogen Sulfide***	Chemical Abstract Services (CAS) Number ***7783-06-4***
Proposed Emission Rate (lb/hr) ***- (OV) / - (FDV)***	Emission Source (describe) ***Process Point***
Source Classification (process point, process fugitive, area fugitive) ***Process Point***	Pollutant Class and Form (organic/inorganic - particulate/vapor) ***Inorganic/Vapor***
Concentration in Emission Stream (ppmv) ***<1 ppmv (OV) / <10 ppmv (FDV)***	Vapor Pressure (in. Hg @ °F) ***1.55×10^{-7} in Hg @ 77 °F***
Solubility ***Insoluble in water; soluble in carbon disulfide***	Molecular Weight (lb/lb-mole) ***34.08***
Absorptive Properties -	

Signature of Applicant	Date

SEND COMPLETED APPLICATION AND ALL ATTACHMENTS TO:

North Dakota Department of Health
Division of Air Quality
918 E Divide Ave., 2nd Floor
Bismarck, ND 58501-1947
(701) 328-5188

PERMIT APPLICATION FOR
HAZARDOUS AIR POLLUTANT (HAP) SOURCES

NORTH DAKOTA DEPARTMENT OF HEALTH
DIVISION OF AIR QUALITY
SFN 8329 (09-12)

SECTION A1 - APPLICANT INFORMATION

Name of Firm or Organization ***Meridian Energy Group - Davis Refinery***		
Applicant's Name ***Tom Williams***		
Title ***VP of Planning &Permitting***	Telephone Number ***(707) 299-0182***	E-mail Address ***twilliams@meridianenergygroup.inc***
Mailing Address (Street & No.) ***2062 Business Center Drive, Suite 115***		
City ***Irvine***	State ***CA***	ZIP Code ***92612***

SECTION A2 - FACILITY INFORMATION

Contact Person for Air Pollution Matters ***Tom Johnson***		
Title ***Vice President of Operations***	Telephone Number ***(409)795-0792***	E-mail Address ***tjohnson@meridianenergygroup.inc***
Facility Address (Street & No. or Lat/Long to Nearest Second) ***37th Street / 46°52'45"N/103°14'55" W***		
City ***Belfield***	State ***ND***	ZIP Code ***58622***
County ***Billings***	Number of Employees at Location ***TBD***	
Land Area at Plant Site ***261*** Acres (or) Sq. Ft.	MSL Elevation at Plant ***2,685 feet***	

Describe Nature of Business/Process ***Petroleum Refining / Storage Tanks (Tank farm)***

SECTION B – STACK DATA

Inside Diameter (ft) ***N/A***	Height Above Grade (ft) ***N/A***	
Gas Temperature at Exit (°F) ***N/A***	Gas Velocity at Exit (ft/sec) ***N/A***	Gas Volume (scfm) ***N/A***
Basis of any Estimates (attach separate sheet if necessary) ***Emission factors from Table 3-3 of the Emissions Estimation Protocol for Petroleum Refineries. See Document P-5715043-01-001-18042-I001 "EMISSIONS INVENTORY" and P-5715043-01-001-18035-I001 "BACT Analysis"***		
Are Emission Control Devices in Place? If YES – Complete SFN 8532		Yes ☒ No ☐
Nearest Residences or Building ***Administrative building***	Distance (ft) ***1,230 ft***	Direction ***East***
Nearest Property Line ***Fenceline***	Distance (ft) ***310 ft***	Direction ***South***

SECTION C – EMISSION STREAM DATA

Source ID No. From SFN 8516 ***Storage Tanks***	Mean Particle Diameter (μm) ***TBD***
Flow Rate (scfm) ***N/A***	Drift Velocity (ft/sec) ***TBD***
Stream Temperature (°F) ***N/A***	Particulate Concentration (gr/dscf) ***TBD***
Moisture Content (%) ***TBD***	Halogens or Metals Present? ***Halogens***
Pressure (in. Hg) ***TBD***	Organic Content (ppmv) ***TBD***
Heat Content (Btu/scfm) ***TBD***	O_2 Content (%) ***TBD***

SECTION D – POLLUTANT SPECIFIC DATA
(Complete One Box for Each Pollutant in Emission Stream)

Pollutant Emitted ***2-Methyl naphthalene***	Chemical Abstract Services (CAS) Number ***91-57-6***
Proposed Emission Rate (lb/hr) ***$2.09x10^{-3}$***	Emission Source (describe) ***Tank Farm***
Source Classification (process point, process fugitive, area fugitive) ***Area Fugitive***	Pollutant Class and Form (organic/inorganic - particulate/vapor) ***Organic/Vapor***
Concentration in Emission Stream (ppmv) ***N/A***	Vapor Pressure (in. Hg @ °F) ***$2.17x10^{-3}$ in Hg @ 77 °F***
Solubility ***In water mg/L @ 77 °F***	Molecular Weight (lb/lb-mole) ***142.08***
Absorptive Properties -	

Pollutant Emitted ***Anthracene***	Chemical Abstract Services (CAS) Number ***120-12-7***
Proposed Emission Rate (lb/hr) ***$1.43x10^{-4}$***	Emission Source (describe) ***Tank Farm***
Source Classification (process point, process fugitive, area fugitive) ***Process Fugitive***	Pollutant Class and Form (organic/inorganic - particulate/vapor) ***Organic/Vapor***
Concentration in Emission Stream (ppmv) ***TBD***	Vapor Pressure (in. Hg @ °F) ***$2.17x10^{-5}$ in Hg @ 77 °F***
Solubility ***In water 1.29 mg/L @ 77 °F***	Molecular Weight (lb/lb-mole) ***178.23***
Absorptive Properties -	

Pollutant Emitted ***Benzene***	Chemical Abstract Services (CAS) Number ***71-43-2***
Proposed Emission Rate (lb/hr) ***$5.01x10^{-2}$***	Emission Source (describe) ***Tank Farm***
Source Classification (process point, process fugitive, area fugitive) ***Area Fugitive***	Pollutant Class and Form (organic/inorganic - particulate/vapor) ***Organic/Vapor***
Concentration in Emission Stream (ppmv) ***N/A***	Vapor Pressure (in. Hg @ °F) ***3.73 in Hg @ 77 °F***
Solubility ***In water $1.79x10^{3}$ mg/L @ 77 °F***	Molecular Weight (lb/lb-mole) ***78.11***
Absorptive Properties -	

Pollutant Emitted ***Biphenyl***	Chemical Abstract Services (CAS) Number ***95-52-4***
Proposed Emission Rate (lb/hr) ***$2.77x10^{-4}$***	Emission Source (describe) ***Tank Farm***
Source Classification (process point, process fugitive, area fugitive) ***Area Fugitive***	Pollutant Class and Form (organic/inorganic - particulate/vapor) ***Organic /Vapor***
Concentration in Emission Stream (ppmv) ***N/A***	Vapor Pressure (in. Hg @ °F) ***$3.51x\ 10^{-4}$ in Hg @ 77 °F***
Solubility ***In water 0.0004 g/100mL @ 68 °F***	Molecular Weight (lb/lb-mole) ***154.21***
Absorptive Properties -	

Pollutant Emitted ***Chrysene***	Chemical Abstract Services (CAS) Number ***218-01-9***
Proposed Emission Rate (lb/hr) ***$1.25x10^{-4}$***	Emission Source (describe) ***Tank Farm***
Source Classification (process point, process fugitive, area fugitive) ***Area Fugitive***	Pollutant Class and Form (organic/inorganic - particulate/vapor) ***Organic/Vapor***
Concentration in Emission Stream (ppmv) ***TBD***	Vapor Pressure (in. Hg @ °F) ***$2.45\ x10^{-10}$in Hg @ 77 °F***
Solubility ***In water 0.002 mg/L @ 77 °F***	Molecular Weight (lb/lb-mole) ***228.29***
Absorptive Properties -	

Pollutant Emitted ***Cresols***	Chemical Abstract Services (CAS) Number ***106-44-5***
Proposed Emission Rate (lb/hr) ***$7.71x10^{-3}$***	Emission Source (describe) ***Tank Farm***
Source Classification (process point, process fugitive, area fugitive) ***Area Fugitive***	Pollutant Class and Form (organic/inorganic - particulate/vapor) ***Organic /Vapor***
Concentration in Emission Stream (ppmv) ***N/A***	Vapor Pressure (in. Hg @ °F) ***0.004 in Hg @ 77°F***
Solubility ***In water $2.15x10^{+4}$@77°F***	Molecular Weight (lb/lb-mole) ***108.14***
Absorptive Properties -	

Pollutant Emitted ***Cumene***	Chemical Abstract Services (CAS) Number ***98-82-8***
Proposed Emission Rate (lb/hr) ***$9.17x10^{-3}$***	Emission Source (describe) ***Tank Farm***
Source Classification (process point, process fugitive, area fugitive) ***Area Fugitive***	Pollutant Class and Form (organic/inorganic - particulate/vapor) ***Organic /Vapor***
Concentration in Emission Stream (ppmv) ***N/A***	Vapor Pressure (in. Hg @ °F) ***0.17 in Hg @ 77°F***
Solubility ***61.3 mg/L @ 77°F***	Molecular Weight (lb/lb-mole) ***120.19***
Absorptive Properties -	

Pollutant Emitted ***Ethylbenzene***	Chemical Abstract Services (CAS) Number ***100-41-4***
Proposed Emission Rate (lb/hr) ***$1.93x10^{-2}$***	Emission Source (describe) ***Tank Farm***
Source Classification (process point, process fugitive, area fugitive) ***Area Fugitive***	Pollutant Class and Form (organic/inorganic - particulate/vapor) ***Organic /Vapor***
Concentration in Emission Stream (ppmv) ***N/A***	Vapor Pressure (in. Hg @ °F) ***0.37 in Hg @ 77°F***
Solubility ***In water 0.014 g/100mL @ 59 °F***	Molecular Weight (lb/lb-mole) ***106.17***
Absorptive Properties -	

Pollutant Emitted ***Fluorene***	Chemical Abstract Services (CAS) Number ***86-73-7***
Proposed Emission Rate (lb/hr) ***$2.15x10^{-4}$***	Emission Source (describe) ***Tank Farm***
Source Classification (process point, process fugitive, area fugitive) ***Area Fugitive***	Pollutant Class and Form (organic/inorganic - particulate/vapor) ***Organic/Vapor***
Concentration in Emission Stream (ppmv) ***TBD***	Vapor Pressure (in. Hg @ °F) ***$1.26x10^{-5}$ in Hg @ 77 °F***
Solubility ***Insoluble in water***	Molecular Weight (lb/lb-mole) ***166.22***
Absorptive Properties -	

Pollutant Emitted ***Hexane***	Chemical Abstract Services (CAS) Number ***110-54-5***
Proposed Emission Rate (lb/hr) ***$3.30x10^{-1}$***	Emission Source (describe) ***Tank Farm***
Source Classification (process point, process fugitive, area fugitive) ***Area Fugitive***	Pollutant Class and Form (organic/inorganic - particulate/vapor) ***Organic /Vapor***
Concentration in Emission Stream (ppmv) ***N/A***	Vapor Pressure (in. Hg @ °F) ***5.90 in Hg @ 68 °F***
Solubility ***Insoluble in water***	Molecular Weight (lb/lb-mole) ***86.1***
Absorptive Properties -	

Pollutant Emitted ***Methanol***	Chemical Abstract Services (CAS) Number ***67-56-1***
Proposed Emission Rate (lb/hr) ***$2.26x10^{-3}$***	Emission Source (describe) ***Tank Farm***
Source Classification (process point, process fugitive, area fugitive) ***Area Fugitive***	Pollutant Class and Form (organic/inorganic - particulate/vapor) ***Organic/Vapor***
Concentration in Emission Stream (ppmv) ***TBD***	Vapor Pressure (in. Hg @ °F) ***5.0 in Hg @ 77 °F***
Solubility ***Miscible in water***	Molecular Weight (lb/lb-mole) ***32.04***
Absorptive Properties -	

Pollutant Emitted ***Methyl isobutyl Ketone***	Chemical Abstract Services (CAS) Number ***108-10-1***
Proposed Emission Rate (lb/hr) ***$1.91x10^{-1}$***	Emission Source (describe) ***Tank Farm***
Source Classification (process point, process fugitive, area fugitive) ***Area Fugitive***	Pollutant Class and Form (organic/inorganic - particulate/vapor) ***Organic/Vapor***
Concentration in Emission Stream (ppmv) ***TBD***	Vapor Pressure (in. Hg @ °F) ***0.78 in Hg @ 77 °F***
Solubility ***In water 19,000 mg/L @ 77 °F***	Molecular Weight (lb/lb-mole) ***100.16***
Absorptive Properties -	

Pollutant Emitted ***Methyl tertiary-butyl ether***	Chemical Abstract Services (CAS) Number
Proposed Emission Rate (lb/hr) ***$1.71x10^{-1}$***	Emission Source (describe) ***Tank Farm***
Source Classification (process point, process fugitive, area fugitive) ***Area Fugitive***	Pollutant Class and Form (organic/inorganic - particulate/vapor) ***Organic /Vapor***
Concentration in Emission Stream (ppmv) ***N/A***	Vapor Pressure (in. Hg @ °F) ***2.95 in Hg @ 154 °F***
Solubility ***In water 4.2 g/100mL @ 68°F***	Molecular Weight (lb/lb-mole) ***88.15***
Absorptive Properties -	

Pollutant Emitted ***Naphthalene***	Chemical Abstract Services (CAS) Number ***91-20-3***
Proposed Emission Rate (lb/hr) ***$4.91x10^{-3}$***	Emission Source (describe) ***Tank Farm***
Source Classification (process point, process fugitive, area fugitive) ***Area Fugitive***	Pollutant Class and Form (organic/inorganic - particulate/vapor) ***Organic/Vapor***
Concentration in Emission Stream (ppmv) ***N/A***	Vapor Pressure (in. Hg @ °F) ***0.003 in Hg @ 77 °F***
Solubility ***In water 31 mg/L @ 77 °F***	Molecular Weight (lb/lb-mole) ***128.17***
Absorptive Properties -	

Pollutant Emitted ***Phenanthrene***	Chemical Abstract Services (CAS) Number ***85-01-8***
Proposed Emission Rate (lb/hr) ***$8.94x10^{-4}$***	Emission Source (describe) ***Tank Farm***
Source Classification (process point, process fugitive, area fugitive) ***Area Fugitive***	Pollutant Class and Form (organic/inorganic - particulate/vapor) ***Organic/Vapor***
Concentration in Emission Stream (ppmv) ***TBD***	Vapor Pressure (in. Hg @ °F) ***$4.76x10^{-6}$ in Hg @ 77 °F***
Solubility ***In water 1.15 mg/L @ 77 °F***	Molecular Weight (lb/lb-mole) ***178.23***
Absorptive Properties -	

Pollutant Emitted ***Phenol***	Chemical Abstract Services (CAS) Number ***108-95-2***
Proposed Emission Rate (lb/hr) ***$1.35x10^{-3}$***	Emission Source (describe) ***Tank Farm***
Source Classification (process point, process fugitive, area fugitive) ***Area Fugitive***	Pollutant Class and Form (organic/inorganic - particulate/vapor) ***Organic /Vapor***
Concentration in Emission Stream (ppmv) ***N/A***	Vapor Pressure (in. Hg @ °F) ***0.013 in Hg @ 77°F***
Solubility ***In water 1 g/15mL***	Molecular Weight (lb/lb-mole) ***94.11***
Absorptive Properties -	

Pollutant Emitted ***Pyrene***	Chemical Abstract Services (CAS) Number ***129-00-0***
Proposed Emission Rate (lb/hr) ***$2.32\ x10^{-4}$***	Emission Source (describe) ***Tank Farm***
Source Classification (process point, process fugitive, area fugitive) ***Area Fugitive***	Pollutant Class and Form (organic/inorganic - particulate/vapor) ***Organic/Vapor***
Concentration in Emission Stream (ppmv) ***TBD***	Vapor Pressure (in. Hg @ °F) ***$1.77x10^{-7}$ in Hg @ 77 °F***
Solubility ***In water 0.135 mg/L @ 77 °F***	Molecular Weight (lb/lb-mole) ***202.25***
Absorptive Properties -	

Pollutant Emitted ***Styrene***	Chemical Abstract Services (CAS) Number ***100-42-5***
Proposed Emission Rate (lb/hr) ***$3.63x10^{-2}$***	Emission Source (describe) ***Tank Farm***
Source Classification (process point, process fugitive, area fugitive) ***Area Fugitive***	Pollutant Class and Form (organic/inorganic - particulate/vapor) ***Organic/Vapor***
Concentration in Emission Stream (ppmv) ***N/A***	Vapor Pressure (in. Hg @ °F) ***0.25 in Hg @ 77 °F***
Solubility ***In water 300 mg/L @ 77 °F***	Molecular Weight (lb/lb-mole) ***104.15***
Absorptive Properties -	

Pollutant Emitted ***Toluene***	Chemical Abstract Services (CAS) Number ***108-88-3***
Proposed Emission Rate (lb/hr) ***$1.10x10^{-1}$***	Emission Source (describe) ***Tank Farm***
Source Classification (process point, process fugitive, area fugitive) ***Area Fugitive***	Pollutant Class and Form (organic/inorganic - particulate/vapor) ***Organic/Vapor***
Concentration in Emission Stream (ppmv) ***N/A***	Vapor Pressure (in. Hg @ °F) ***1.11 in Hg @ 77 °F***
Solubility ***In water 526 mg/L @ 77 °F***	Molecular Weight (lb/lb-mole) ***92.14***
Absorptive Properties -	

Pollutant Emitted ***Xylene***	Chemical Abstract Services (CAS) Number ***95-47-6***
Proposed Emission Rate (lb/hr) ***$8.59x10^{-2}$***	Emission Source (describe) ***Tank Farm***
Source Classification (process point, process fugitive, area fugitive) ***Area Fugitive***	Pollutant Class and Form (organic/inorganic - particulate/vapor) ***Organic/Vapor***
Concentration in Emission Stream (ppmv) ***N/A***	Vapor Pressure (in. Hg @ °F) ***0.26 in Hg @ 77 °F***
Solubility ***Insoluble in water***	Molecular Weight (lb/lb-mole) ***106.17***
Absorptive Properties -	

Pollutant Emitted ***Volatile Organic Compounds (VOC)***	Chemical Abstract Services (CAS) Number ***N/A***
Proposed Emission Rate (lb/hr) ***2.09***	Emission Source (describe) ***Tank Farm***
Source Classification (process point, process fugitive, area fugitive) ***Area Fugitive***	Pollutant Class and Form (organic/inorganic - particulate/vapor) ***Organic/Vapor***
Concentration in Emission Stream (ppmv) ***N/A***	Vapor Pressure (in. Hg @ °F) ***N/A***
Solubility ***-***	Molecular Weight (lb/lb-mole) ***0.11***
Absorptive Properties -	

Signature of Applicant	Date 09/26/2016

SEND COMPLETED APPLICATION AND ALL ATTACHMENTS TO:

North Dakota Department of
Health Division of Air Quality
918 E Divide Ave., 2nd Floor
Bismarck, ND 58501-1947
(701) 328-5188

PERMIT APPLICATION FOR
HAZARDOUS AIR POLLUTANT (HAP) SOURCES

NORTH DAKOTA DEPARTMENT OF HEALTH
DIVISION OF AIR QUALITY
SFN 8329 (09-12)

SECTION A1 - APPLICANT INFORMATION

Name of Firm or Organization ***Meridian Energy Group - Davis Refinery***		
Applicant's Name ***Tom Williams***		
Title ***VP of Planning &Permitting***	Telephone Number ***(707) 299-0182***	E-mail Address ***twilliams@meridianenergygroup.inc***
Mailing Address (Street & No.) ***2062 Business Center Drive, Suite 115***		
City ***Irvine***	State ***CA***	ZIP Code ***92612***

SECTION A2 - FACILITY INFORMATION

Contact Person for Air Pollution Matters ***Tom Johnson***		
Title ***Vice President of Operations***	Telephone Number ***(409)795-0792***	E-mail Address ***tjohnson@meridianenergygroup.inc***
Facility Address (Street & No. or Lat/Long to Nearest Second) ***37th Street / 46°52'45"N/103°14'55" W***		
City ***Belfield***	State ***ND***	ZIP Code ***58622***
County ***Billings***	Number of Employees at Location ***TBD***	
Land Area at Plant Site ***261*** Acres (or) Sq. Ft.	MSL Elevation at Plant ***2,685 feet***	

Describe Nature of Business/Process

Petroleum Refining / WasteWater Treatment Plant - 206WWT (Fugitive)

SECTION B – STACK DATA

Inside Diameter (ft) ***N/A***	Height Above Grade (ft) ***N/A***	
Gas Temperature at Exit (°F) ***N/A***	Gas Velocity at Exit (ft/sec) ***N/A***	Gas Volume (scfm) ***N/A***
Basis of any Estimates (attach separate sheet if necessary) ***Engineering data and * Table 7-8. Table 7-9. and Table 7-10 from the Emissions Estimation Protocol for Petroleum Refineries. See Document P-5715043-01-001-18042-I001 "EMISSIONS INVENTORY" and P-5715043-01-001-18035-I001 "BACT Analysis"***		
Are Emission Control Devices in Place? If YES – Complete SFN 8532		Yes ☐ No ☒
Nearest Residences or Building ***Administrative building***	Distance (ft) ***1,434 ft***	Direction ***South***
Nearest Property Line ***Fenceline***	Distance (ft) ***963 ft***	Direction ***Northwest***

SECTION C – EMISSION STREAM DATA

Source ID No. From SFN 8516 ***206WWT (Fugitive)***	Mean Particle Diameter (μm)
Flow Rate (scfm) ***N/A***	Drift Velocity (ft/sec) ***N/A***
Stream Temperature (°F) ***N/A***	Particulate Concentration (gr/dscf) ***N/A***
Moisture Content (%) ***N/A***	Halogens or Metals Present? ***No***
Pressure (in. Hg) ***N/A***	Organic Content (ppmv) ***N/A***
Heat Content (Btu/scfm) ***N/A***	O_2 Content (%) ***N/A***

SECTION D – POLLUTANT SPECIFIC DATA
(Complete One Box for Each Pollutant in Emission Stream)

Pollutant Emitted ***2,2,4-trimethylpentane***	Chemical Abstract Services (CAS) Number ***540-84-1***
Proposed Emission Rate (lb/hr) ***2.41×10^{-2}***	Emission Source (describe) ***Fugitive***
Source Classification (process point, process fugitive, area fugitive) ***Process Fugitive***	Pollutant Class and Form (organic/inorganic - particulate/vapor) ***Organic/Vapor***
Concentration in Emission Stream (ppmv) ***N/A***	Vapor Pressure (in. Hg @ °F) ***1.50 in Hg @ 68 °F***
Solubility ***Insoluble in water***	Molecular Weight (lb/lb-mole) ***114.22***
Absorptive Properties -	

Pollutant Emitted ***Benzene***	Chemical Abstract Services (CAS) Number ***71-43-2***
Proposed Emission Rate (lb/hr) ***5.56×10^{-3}***	Emission Source (describe) ***Fugitive***
Source Classification (process point, process fugitive, area fugitive) ***Process Fugitive***	Pollutant Class and Form (organic/inorganic - particulate/vapor) ***Organic /Vapor***
Concentration in Emission Stream (ppmv) ***N/A***	Vapor Pressure (in. Hg @ °F) ***3.73 in Hg @ 77 °F***
Solubility ***In water 1.79×10^{3} mg/L @ 77 °F***	Molecular Weight (lb/lb-mole) ***78.11***
Absorptive Properties -	

Pollutant Emitted ***Biphenyl***	Chemical Abstract Services (CAS) Number ***95-52-4***
Proposed Emission Rate (lb/hr) ***2.34×10^{-5}***	Emission Source (describe) ***Fugitive***
Source Classification (process point, process fugitive, area fugitive) ***Process Fugitive***	Pollutant Class and Form (organic/inorganic - particulate/vapor) ***Organic /Vapor***
Concentration in Emission Stream (ppmv) ***N/A***	Vapor Pressure (in. Hg @ °F) ***3.51×10^{-4} in Hg @ 77 °F***
Solubility ***In water 0.0004 g/100mL @ 68 °F***	Molecular Weight (lb/lb-mole) ***154.21***
Absorptive Properties -	

Pollutant Emitted ***Cresols***	Chemical Abstract Services (CAS) Number ***106-44-5***
Proposed Emission Rate (lb/hr) ***0***	Emission Source (describe) ***Fugitive***
Source Classification (process point, process fugitive, area fugitive) ***Process Fugitive***	Pollutant Class and Form (organic/inorganic - particulate/vapor) ***Organic /Vapor***
Concentration in Emission Stream (ppmv) ***N/A***	Vapor Pressure (in. Hg @ °F) ***0.004 in Hg @ 77°F***
Solubility ***In water $2.15x10^{+4}$@77°F***	Molecular Weight (lb/lb-mole) ***108.14***
Absorptive Properties -	

Pollutant Emitted ***Cumene***	Chemical Abstract Services (CAS) Number ***98-82-8***
Proposed Emission Rate (lb/hr) ***$1.97x10^{-3}$***	Emission Source (describe) ***Fugitive***
Source Classification (process point, process fugitive, area fugitive) ***Process Fugitive***	Pollutant Class and Form (organic/inorganic - particulate/vapor) ***Organic /Vapor***
Concentration in Emission Stream (ppmv) ***N/A***	Vapor Pressure (in. Hg @ °F) ***0.17 in Hg @ 77°F***
Solubility ***61.3 mg/L @ 77°F***	Molecular Weight (lb/lb-mole) ***120.19***
Absorptive Properties -	

Pollutant Emitted ***Ethylbenzene***	Chemical Abstract Services (CAS) Number ***100-41-4***
Proposed Emission Rate (lb/hr) ***$4.31x10^{-3}$***	Emission Source (describe) ***Fugitive***
Source Classification (process point, process fugitive, area fugitive) ***Process Fugitive***	Pollutant Class and Form (organic/inorganic - particulate/vapor) ***Organic /Vapor***
Concentration in Emission Stream (ppmv) ***N/A***	Vapor Pressure (in. Hg @ °F) ***0.37 in Hg @ 77°F***
Solubility ***In water 0.014 g/100mL @ 59 °F***	Molecular Weight (lb/lb-mole) ***106.17***
Absorptive Properties -	

Pollutant Emitted ***Hexane***	Chemical Abstract Services (CAS) Number ***110-54-5***
Proposed Emission Rate (lb/hr) ***$4.28x10^{-2}$***	Emission Source (describe) ***Fugitive***
Source Classification (process point, process fugitive, area fugitive) ***Process Fugitive***	Pollutant Class and Form (organic/inorganic - particulate/vapor) ***Organic /Vapor***
Concentration in Emission Stream (ppmv) ***N/A***	Vapor Pressure (in. Hg @ °F) ***5.90 in Hg @ 68 °F***
Solubility ***Insoluble in water***	Molecular Weight (lb/lb-mole) ***86.1***
Absorptive Properties -	

Pollutant Emitted ***Methyl tertiary-butyl ether***	Chemical Abstract Services (CAS) Number
Proposed Emission Rate (lb/hr) ***1.17x10^{-3}***	Emission Source (describe) ***Fugitive***
Source Classification (process point, process fugitive, area fugitive) ***Process Fugitive***	Pollutant Class and Form (organic/inorganic - particulate/vapor) ***Organic /Vapor***
Concentration in Emission Stream (ppmv) ***N/A***	Vapor Pressure (in. Hg @ °F) ***2.95 in Hg @ 154 °F***
Solubility ***In water 4.2 g/100mL @ 68°F***	Molecular Weight (lb/lb-mole) ***88.15***
Absorptive Properties -	

Pollutant Emitted ***Naphthalene***	Chemical Abstract Services (CAS) Number ***91-20-3***
Proposed Emission Rate (lb/hr) ***6.32x10^{-4}***	Emission Source (describe) ***Fugitive***
Source Classification (process point, process fugitive, area fugitive) ***Process Fugitive***	Pollutant Class and Form (organic/inorganic - particulate/vapor) ***Organic /Vapor***
Concentration in Emission Stream (ppmv) ***N/A***	Vapor Pressure (in. Hg @ °F) ***0.003 in Hg @ 77 °F***
Solubility ***In water 31 mg/L @ 77 °F***	Molecular Weight (lb/lb-mole) ***128.17***
Absorptive Properties -	

Pollutant Emitted ***Phenol***	Chemical Abstract Services (CAS) Number ***108-95-2***
Proposed Emission Rate (lb/hr) ***0***	Emission Source (describe) ***Fugitive***
Source Classification (process point, process fugitive, area fugitive) ***Process Fugitive***	Pollutant Class and Form (organic/inorganic - particulate/vapor) ***Organic /Vapor***
Concentration in Emission Stream (ppmv) ***N/A***	Vapor Pressure (in. Hg @ °F) ***0.013 in Hg @ 77°F***
Solubility ***In water 1 g/15mL***	Molecular Weight (lb/lb-mole) ***94.11***
Absorptive Properties -	

Pollutant Emitted ***Styrene***	Chemical Abstract Services (CAS) Number ***100-42-5***
Proposed Emission Rate (lb/hr) ***8.26 x10^{-3}***	Emission Source (describe) ***Fugitive***
Source Classification (process point, process fugitive, area fugitive) ***Process Fugitive***	Pollutant Class and Form (organic/inorganic - particulate/vapor) ***Organic /Vapor***
Concentration in Emission Stream (ppmv) ***N/A***	Vapor Pressure (in. Hg @ °F) ***0.25 in Hg @ 77°F***
Solubility ***In water 300 mg/L @ 77°F***	Molecular Weight (lb/lb-mole) ***104.15***
Absorptive Properties -	

Pollutant Emitted ***Toluene***	Chemical Abstract Services (CAS) Number ***108-88-3***
Proposed Emission Rate (lb/hr) ***$1.39x10^{-2}$***	Emission Source (describe) ***Fugitive***
Source Classification (process point, process fugitive, area fugitive) ***Process Fugitive***	Pollutant Class and Form (organic/inorganic - particulate/vapor) ***Organic /Vapor***
Concentration in Emission Stream (ppmv) ***N/A***	Vapor Pressure (in. Hg @ °F) ***1.11 in Hg @ 77 °F***
Solubility ***In water 526 mg/L @ 77 °F***	Molecular Weight (lb/lb-mole) ***92.14***
Absorptive Properties -	

Pollutant Emitted ***Xylene***	Chemical Abstract Services (CAS) Number ***95-47-6***
Proposed Emission Rate (lb/hr) ***$1.68x10^{-2}$***	Emission Source (describe) ***Fugitive***
Source Classification (process point, process fugitive, area fugitive) ***Process Fugitive***	Pollutant Class and Form (organic/inorganic - particulate/vapor) ***Organic /Vapor***
Concentration in Emission Stream (ppmv) ***N/A***	Vapor Pressure (in. Hg @ °F) ***0.26 in Hg @ 77°F***
Solubility ***In water 178 mg/L @ 77°F***	Molecular Weight (lb/lb-mole) ***106.16***
Absorptive Properties -	

Pollutant Emitted ***1,3-Butadiene***	Chemical Abstract Services (CAS) Number ***106-99-0***
Proposed Emission Rate (lb/hr) ***$1.00x10^{-5}$***	Emission Source (describe) ***Fugitive***
Source Classification (process point, process fugitive, area fugitive) ***Process Fugitive***	Pollutant Class and Form (organic/inorganic - particulate/vapor) ***Organic /Vapor***
Concentration in Emission Stream (ppmv) ***N/A***	Vapor Pressure (in. Hg @ °F) ***72.34 in Hg @ 68 °F***
Solubility ***Insoluble in water***	Molecular Weight (lb/lb-mole) ***54.09***
Absorptive Properties -	

Signature of Applicant	Date 09/26/2016

SEND COMPLETED APPLICATION AND ALL ATTACHMENTS TO:

North Dakota Department of
Health Division of Air Quality
918 E Divide Ave., 2nd Floor
Bismarck, ND 58501-1947
(701) 328-5188

PERMIT APPLICATION FOR
VOLATILE ORGANIC COMPOUNDS STORAGE TANK

NORTH DAKOTA DEPARTMENT OF HEALTH
DIVISION OF AIR QUALITY
SFN 8535 (10-13)

SECTION A – FACILITY INFORMATION

Name of Firm or Organization ***Meridian Energy Group – Davis Refinery***		
Applicant´s Name ***Tom Williams***		
Title ***VP of Planning & Permitting***	Telephone Number ***(707) 299-0182***	E-mail Address ***twilliams@meridianenergygroup.inc***
Mailing Address (Street & No.) ***2062 Business Center Drive, Suite 115***		
City ***Irvine***	State ***CA***	ZIP Code ***92612***
Contact Person for Air Pollution Matters ***Tom Johnson***		
Title ***Vice President of Operations***	Telephone Number ***(409)795-0792***	E-mail Address ***tjohnson@meridianenergygroup.inc***

SECTION B – TANK DATA

Legal Description of Facility Site ***Property ID 07 0000 00165 000 in the SE 1/4 of Section 2, Twp 139N, Range 100W and*** ***Property ID: 07 0000 00162 000 in the NW1/4 and SW 1/4 of Section 1, Twp 139N, Range 100W***				
County ***Billings***		Source ID Number ***203-T-0001***		
Capacity	Barrels ***110,999***		Gallons ***4,661,958***	
Dimensions	Diameter ***115'***	Height ***60'***	Length	Width
Shape	☒Cylindrical ☐Spherical ☐Other – Specify:			
Materials of Construction	***Carbon Steel***			
Construction	☐Riveted ☒Welded ☐Other – Specify:			
Color	***Beige***			
Condition	☒Good ☐Fair ☐Poor			
Status	☒New Construction ☐Alteration ☐Existing (Give Date Constructed): _____			
Type of Tank	☐Fixed Roof ☐Variable Vapor Space ☐Pressure (low or high)	☐External Floating ☒ Internal Floating ☐Other – Specify:		
Type of Roof	☐Pan ☒Double Deck ☐Pontoon ☐Other – Specify:			
Type of Seal	Metallic Shoe Seal	Liquid Mounted Resilient Seal	Vapor Mounted Resilient Seal	
	☐Primary Seal Only ☒With Rim Mounted Seal ☐With Shoe Mounted Secondary Seal	☐Primary Seal Only ☐With Rim Mounted Seal ☐With Weather Shield	☐Primary Seal Only ☐With Rim Mounted Seal ☐With Weather Shield	

SECTION C – TANK CONTENTS

Crude Oil, (RVP 6.8 – 7 psi)

SECTION D – VAPOR DISPOSAL

☒Atmosphere ☐Vapor Recovery Unit ☐Flare ☐Other – Specify:

SECTION E – VAPOR PRESSURE DATA

psia	
Maximum True Vapor Pressure **-**	Maximum Reid Vapor Pressure ***6.8 - 7***

SECTION F – OPERATIONAL DATA

Maximum Filling Rate (barrels per hour or gallons per hour) ***TBD***	Vapor Space Outage (See AP-42, 7.1-92, Equation 1-15) ***N/A***
Average Throughput (gallons per day) ***770,000***	Tank Turnovers per Year ***60.25***

SECTION G – SOLUTION STORAGE

If material stored is a solution, supply the following information:	
Name of Solvent ***N/A***	Name of Material Dissolved ***N/A***
Concentration of Material Dissolved (% by weight or % by volume or lbs/gal) ***N/A***	

SECTION H – AIR CONTAMINANTS EMITTED

Pollutant*	Maximum Pounds Per Hour	Tons Per Year	Basis and Calculations for Quantities (Attach separate sheet if needed)
Benzene	***3.06E-03***	***1.34E-02***	***VOC from TANKS 4.0.9d software modeled runs.*** ***HAPs from Table 3-3 of the Emissions Estimation Protocol for Petroleum Refineries*** ***See Document P-5715043-01-001-18042-I001 "EMISSIONS INVENTORY" and P-5715043-01-001-18035-I001 "BACT Analysis"***
Biphenyl	***6.11E-05***	***2.68E-04***	
Cresol	***1.83E-04***	***8.03E-04***	
Cumene	***1.53E-04***	***6.69E-04***	
Ethylbenzene	***4.89E-04***	***2.14E-03***	
Hexane	***2.57E-02***	***1.12E-01***	
Naphthalene	***1.83E-04***	***8.03E-04***	
Phenol	***2.75E-04***	***1.20E-03***	
Toluene	***2.29E-03***	***1.00E-02***	
Xylene	***1.89E-03***	***8.30E-03***	
VOC	***2.80E-01***	***1.22E+00***	

* Include an estimate of greenhouse gas emissions (CO_2e)

SECTION I – STANDARDS OF PERFORMANCE

Tank subject to:	☐40 CFR 60, Subpart K	☐40 CFR 60, Subpart Ka	☒40 CFR 60, Subpart Kb
Are the standards of performance for new stationary sources; petroleum liquid storage vessels, 40 CFR Part 60, Subparts K, Ka, and Kb being adhered to, where applicable? ☒Yes ☐ No – Explain:			

Signature of Applicant	Date
	09/26/2016

SEND COMPLETED APPLICATION AND ALL ATTACHMENTS TO:

North Dakota Department of Health
Division of Air Quality
918 E Divide Ave., 2nd Floor
Bismarck, ND 58501-1947
(701) 328-5188

PERMIT APPLICATION FOR
VOLATILE ORGANIC COMPOUNDS STORAGE TANK

NORTH DAKOTA DEPARTMENT OF HEALTH
DIVISION OF AIR QUALITY
SFN 8535 (10-13)

SECTION A – FACILITY INFORMATION

Name of Firm or Organization ***Meridian Energy Group – Davis Refinery***		
Applicant´s Name ***Tom Williams***		
Title ***VP of Planning & Permitting***	Telephone Number ***(707) 299-0182***	E-mail Address ***twilliams@meridianenergygroup.inc***
Mailing Address (Street & No.) ***2062 Business Center Drive, Suite 115***		
City ***Irvine***	State ***CA***	ZIP Code ***92612***
Contact Person for Air Pollution Matters ***Tom Johnson***		
Title ***Vice President of Operations***	Telephone Number ***(409)795-0792***	E-mail Address ***tjohnson@meridianenergygroup.inc***

SECTION B – TANK DATA

Legal Description of Facility Site ***Property ID 07 0000 00165 000 in the SE 1/4 of Section 2, Twp 139N, Range 100W and*** ***Property ID: 07 0000 00162 000 in the NW1/4 and SW 1/4 of Section 1, Twp 139N, Range 100W***				
County ***Billings***		Source ID Number ***203-T-0002***		
Capacity	Barrels ***110,999***		Gallons ***4,661,958***	
Dimensions	Diameter ***115'***	Height ***60'***	Length	Width
Shape	☒Cylindrical	☐Spherical	☐Other – Specify:	
Materials of Construction	***Carbon Steel***			
Construction	☐Riveted	☒Welded	☐Other – Specify:	
Color	***Beige***			
Condition	☒Good	☐Fair	☐Poor	
Status	☒New Construction	☐Alteration	☐Existing (Give Date Constructed): _____	
Type of Tank	☐Fixed Roof ☐Variable Vapor Space ☐Pressure (low or high)		☐External Floating ☒ Internal Floating ☐Other – Specify:	
Type of Roof	☐Pan	☒Double Deck	☐Pontoon	☐Other – Specify:
Type of Seal	Metallic Shoe Seal	Liquid Mounted Resilient Seal	Vapor Mounted Resilient Seal	
	☐Primary Seal Only ☐With Rim Mounted Seal ☒With Shoe Mounted Secondary Seal	☐Primary Seal Only ☐With Rim Mounted Seal ☐With Weather Shield	☐Primary Seal Only ☐With Rim Mounted Seal ☐With Weather Shield	

SECTION C – TANK CONTENTS

Crude Oil, (RVP 6.8 – 7 psi)

SECTION D – VAPOR DISPOSAL

☒Atmosphere ☐Vapor Recovery Unit ☐Flare ☐Other – Specify:

SECTION E – VAPOR PRESSURE DATA

psia	
Maximum True Vapor Pressure **-**	Maximum Reid Vapor Pressure ***6.8 - 7***

SECTION F – OPERATIONAL DATA

Maximum Filling Rate (barrels per hour or gallons per hour) ***TBD***	Vapor Space Outage (See AP-42, 7.1-92, Equation 1-15) ***N/A***
Average Throughput (gallons per day) ***770,000***	Tank Turnovers per Year ***60.25***

SECTION G – SOLUTION STORAGE

If material stored is a solution, supply the following information:	
Name of Solvent ***N/A***	Name of Material Dissolved ***N/A***
Concentration of Material Dissolved (% by weight or % by volume or lbs/gal) ***N/A***	

SECTION H – AIR CONTAMINANTS EMITTED

Pollutant*	Maximum Pounds Per Hour	Tons Per Year	Basis and Calculations for Quantities (Attach separate sheet if needed)
Benzene	***3.06E-03***	***1.34E-02***	***VOC from TANKS 4.0.9d software modeled runs.*** ***HAPs from Table 3-3 of the Emissions Estimation Protocol for Petroleum Refineries*** ***See Document P-5715043-01-001-18042-I001 "EMISSIONS INVENTORY" and P-5715043-01-001-18035-I001 "BACT Analysis"***
Biphenyl	***6.11E-05***	***2.68E-04***	
Cresol	***1.83E-04***	***8.03E-04***	
Cumene	***1.53E-04***	***6.69E-04***	
Ethylbenzene	***4.89E-04***	***2.14E-03***	
Hexane	***2.57E-02***	***1.12E-01***	
Naphthalene	***1.83E-04***	***8.03E-04***	
Phenol	***2.75E-04***	***1.20E-03***	
Toluene	***2.29E-03***	***1.00E-02***	
Xylene	***1.89E-03***	***8.30E-03***	
VOC	***2.80E-01***	***1.22E+00***	

* Include an estimate of greenhouse gas emissions (CO_2e)

SECTION I – STANDARDS OF PERFORMANCE

Tank subject to:	☐40 CFR 60, Subpart K	☐40 CFR 60, Subpart Ka	☒40 CFR 60, Subpart Kb
Are the standards of performance for new stationary sources; petroleum liquid storage vessels, 40 CFR Part 60, Subparts K, Ka, and Kb being adhered to, where applicable? ☒Yes ☐ No – Explain:			

Signature of Applicant	Date
	09/26/2016

SEND COMPLETED APPLICATION AND ALL ATTACHMENTS TO:

North Dakota Department of Health
Division of Air Quality
918 E Divide Ave., 2nd Floor
Bismarck, ND 58501-1947
(701) 328-5188

PERMIT APPLICATION FOR
VOLATILE ORGANIC COMPOUNDS STORAGE TANK

NORTH DAKOTA DEPARTMENT OF HEALTH
DIVISION OF AIR QUALITY
SFN 8535 (10-13)

SECTION A – FACILITY INFORMATION

Name of Firm or Organization ***Meridian Energy Group – Davis Refinery***		
Applicant´s Name ***Tom Williams***		
Title ***VP of Planning & Permitting***	Telephone Number ***(707) 299-0182***	E-mail Address ***twilliams@meridianenergygroup.inc***
Mailing Address (Street & No.) ***2062 Business Center Drive, Suite 115***		
City ***Irvine***	State ***CA***	ZIP Code ***92612***
Contact Person for Air Pollution Matters ***Tom Johnson***		
Title ***Vice President of Operations***	Telephone Number ***(409)795-0792***	E-mail Address ***tjohnson@meridianenergygroup.inc***

SECTION B – TANK DATA

Legal Description of Facility Site ***Property ID 07 0000 00165 000 in the SE 1/4 of Section 2, Twp 139N, Range 100W and*** ***Property ID: 07 0000 00162 000 in the NW1/4 and SW 1/4 of Section 1, Twp 139N, Range 100W***				
County ***Billings***		Source ID Number ***203-T-0003***		
Capacity	Barrels ***110,999***		Gallons ***4,661,958***	
Dimensions	Diameter ***115'***	Height ***60'***	Length	Width
Shape	☒Cylindrical	☐Spherical	☐Other – Specify:	
Materials of Construction	***Carbon Steel***			
Construction	☐Riveted	☒Welded	☐Other – Specify:	
Color	***Beige***			
Condition	☒Good	☐Fair	☐Poor	
Status	☒New Construction	☐Alteration	☐Existing (Give Date Constructed): _____	
Type of Tank	☐Fixed Roof ☐Variable Vapor Space ☐Pressure (low or high)		☐External Floating ☒ Internal Floating ☐Other – Specify:	
Type of Roof	☐Pan	☒Double Deck	☐Pontoon	☐Other – Specify:
Type of Seal	Metallic Shoe Seal	Liquid Mounted Resilient Seal	Vapor Mounted Resilient Seal	
	☐Primary Seal Only ☐With Rim Mounted Seal ☒With Shoe Mounted Secondary Seal	☐Primary Seal Only ☐With Rim Mounted Seal ☐With Weather Shield	☐Primary Seal Only ☐With Rim Mounted Seal ☐With Weather Shield	

SECTION C – TANK CONTENTS

Crude Oil, (RVP 6.8 – 7 psi)

SECTION D – VAPOR DISPOSAL

☒Atmosphere ☐Vapor Recovery Unit ☐Flare ☐Other – Specify:

SECTION E – VAPOR PRESSURE DATA

psia	
Maximum True Vapor Pressure **-**	Maximum Reid Vapor Pressure ***6.8 - 7***

SECTION F – OPERATIONAL DATA

Maximum Filling Rate (barrels per hour or gallons per hour) ***TBD***	Vapor Space Outage (See AP-42, 7.1-92, Equation 1-15) ***N/A***
Average Throughput (gallons per day) ***770,000***	Tank Turnovers per Year ***60.25***

SECTION G – SOLUTION STORAGE

If material stored is a solution, supply the following information:	
Name of Solvent ***N/A***	Name of Material Dissolved ***N/A***
Concentration of Material Dissolved (% by weight or % by volume or lbs/gal) ***N/A***	

SECTION H – AIR CONTAMINANTS EMITTED

Pollutant*	Maximum Pounds Per Hour	Tons Per Year	Basis and Calculations for Quantities (Attach separate sheet if needed)
Benzene	***3.06E-03***	***1.34E-02***	***VOC from TANKS 4.0.9d software modeled runs.*** ***HAPs from Table 3-3 of the Emissions Estimation Protocol for Petroleum Refineries*** ***See Document P-5715043-01-001-18042-I001 "EMISSIONS INVENTORY" and P-5715043-01-001-18035-I001 "BACT Analysis"***
Biphenyl	***6.11E-05***	***2.68E-04***	
Cresol	***1.83E-04***	***8.03E-04***	
Cumene	***1.53E-04***	***6.69E-04***	
Ethylbenzene	***4.89E-04***	***2.14E-03***	
Hexane	***2.57E-02***	***1.12E-01***	
Naphthalene	***1.83E-04***	***8.03E-04***	
Phenol	***2.75E-04***	***1.20E-03***	
Toluene	***2.29E-03***	***1.00E-02***	
Xylene	***1.89E-03***	***8.30E-03***	
VOC	***2.80E-01***	***1.22E+00***	

* Include an estimate of greenhouse gas emissions (CO_2e)

SECTION I – STANDARDS OF PERFORMANCE

Tank subject to:	☐40 CFR 60, Subpart K	☐40 CFR 60, Subpart Ka	☒40 CFR 60, Subpart Kb
Are the standards of performance for new stationary sources; petroleum liquid storage vessels, 40 CFR Part 60, Subparts K, Ka, and Kb being adhered to, where applicable? ☒Yes ☐ No – Explain:			

Signature of Applicant	Date
	09/26/2016

SEND COMPLETED APPLICATION AND ALL ATTACHMENTS TO:

North Dakota Department of Health
Division of Air Quality
918 E Divide Ave., 2nd Floor
Bismarck, ND 58501-1947
(701) 328-5188

PERMIT APPLICATION FOR
VOLATILE ORGANIC COMPOUNDS STORAGE TANK

NORTH DAKOTA DEPARTMENT OF HEALTH
DIVISION OF AIR QUALITY
SFN 8535 (10-13)

SECTION A – FACILITY INFORMATION

Name of Firm or Organization ***Meridian Energy Group – Davis Refinery***		
Applicant´s Name ***Tom Williams***		
Title ***VP of Planning & Permitting***	Telephone Number ***(707) 299-0182***	E-mail Address ***twilliams@meridianenergygroup.inc***
Mailing Address (Street & No.) ***2062 Business Center Drive, Suite 115***		
City ***Irvine***	State ***CA***	ZIP Code ***92612***
Contact Person for Air Pollution Matters ***Tom Johnson***		
Title ***Vice President of Operations***	Telephone Number ***(409)795-0792***	E-mail Address ***tjohnson@meridianenergygroup.inc***

SECTION B – TANK DATA

Legal Description of Facility Site ***Property ID 07 0000 00165 000 in the SE 1/4 of Section 2, Twp 139N, Range 100W and*** ***Property ID: 07 0000 00162 000 in the NW1/4 and SW 1/4 of Section 1, Twp 139N, Range 100W***				
County ***Billings***		Source ID Number ***203-T-0005***		
Capacity	Barrels ***64,996***		Gallons ***2,729,832***	
Dimensions	Diameter ***88'***	Height ***60'***	Length	Width
Shape	☒Cylindrical	☐Spherical	☐Other – Specify:	
Materials of Construction	***Carbon Steel***			
Construction	☐Riveted	☒Welded	☐Other – Specify:	
Color	***Beige***			
Condition	☒Good	☐Fair	☐Poor	
Status	☒New Construction	☐Alteration	☐Existing (Give Date Constructed): _____	
Type of Tank	☐Fixed Roof ☐Variable Vapor Space ☐Pressure (low or high)		☐External Floating ☒ Internal Floating ☐Other – Specify:	
Type of Roof	☐Pan	☒Double Deck	☐Pontoon	☐Other – Specify:
Type of Seal	Metallic Shoe Seal	Liquid Mounted Resilient Seal	Vapor Mounted Resilient Seal	
	☐Primary Seal Only ☐With Rim Mounted Seal ☐With Shoe Mounted Secondary Seal	☐Primary Seal Only ☒With Rim Mounted Seal ☐With Weather Shield	☐Primary Seal Only ☐With Rim Mounted Seal ☐With Weather Shield	

SECTION C – TANK CONTENTS

Desulfurized Heavy Naphtha, (RVP 1.2 psi)

SECTION D – VAPOR DISPOSAL

☒Atmosphere	☐Vapor Recovery Unit	☐Flare	☐Other – Specify:

SECTION E – VAPOR PRESSURE DATA

psia	
Maximum True Vapor Pressure **-**	Maximum Reid Vapor Pressure ***1.2***

SECTION F – OPERATIONAL DATA

Maximum Filling Rate (barrels per hour or gallons per hour) ***TBD***	Vapor Space Outage (See AP-42, 7.1-92, Equation 1-15) ***N/A***
Average Throughput (gallons per day) ***89,896.8***	Tank Turnovers per Year ***26.78***

SECTION G – SOLUTION STORAGE

If material stored is a solution, supply the following information:	
Name of Solvent ***N/A***	Name of Material Dissolved ***N/A***
Concentration of Material Dissolved (% by weight or % by volume or lbs/gal) ***N/A***	

SECTION H – AIR CONTAMINANTS EMITTED

Pollutant*	Maximum Pounds Per Hour	Tons Per Year	Basis and Calculations for Quantities (Attach separate sheet if needed)
2-Methyl naphthalene	***2.4E-04***	***1.0E-03***	***VOC from TANKS 4.0.9d software modeled runs.*** ***HAPs from Table 3-3 of the Emissions Estimation Protocol for Petroleum Refineries*** ***See Document P-5715043-01-001-18042-I001 "EMISSIONS INVENTORY" and P-5715043-01-001-18035-I001 "BACT Analysis"***
Anthracene	***1.6E-05***	***7.1E-05***	
Benzene	***4.7E-03***	***2.1E-02***	
Biphenyl	***1.1E-05***	***5.0E-05***	
Chrysene	***1.4E-05***	***6.2E-05***	
Cresol	***8.8E-04***	***3.8E-03***	
Cumene	***1.0E-03***	***4.4E-03***	
Ethylbenzene	***2.1E-03***	***9.2E-03***	
Fluorene	***2.4E-05***	***1.1E-04***	
Hexane	***2.8E-02***	***1.2E-01***	
Methanol	***2.6E-04***	***1.1E-03***	
Methyl isobutyl ketone	***2.2E-02***	***9.5E-02***	
Methyl tertiary-butyl ether	***2.1E-02***	***9.2E-02***	
Naphthalene	***5.1E-04***	***2.2E-03***	
Phenanthrene	***1.0E-04***	***4.4E-04***	
Phenol	***6.1E-05***	***2.7E-04***	
Pyrene	***2.6E-05***	***1.2E-04***	
Styrene	***4.5E-03***	***2.0E-02***	
Toluene	***1.2E-02***	***5.3E-02***	
Xylene	***9.5E-03***	***4.1E-02***	
VOC	***3.95E-02***	***1.73E-01***	

* Include an estimate of greenhouse gas emissions (CO_2e)

SECTION I – STANDARDS OF PERFORMANCE

Tank subject to:	☐40 CFR 60, Subpart K	☐40 CFR 60, Subpart Ka	☒40 CFR 60, Subpart Kb
Are the standards of performance for new stationary sources; petroleum liquid storage vessels, 40 CFR Part 60, Subparts K, Ka, and Kb being adhered to, where applicable? ☒Yes ☐ No – Explain:			

Signature of Applicant	Date
	09/26/2016

SEND COMPLETED APPLICATION AND ALL ATTACHMENTS TO:

North Dakota Department of Health
Division of Air Quality
918 E Divide Ave., 2nd Floor
Bismarck, ND 58501-1947
(701) 328-5188

PERMIT APPLICATION FOR
VOLATILE ORGANIC COMPOUNDS STORAGE TANK

NORTH DAKOTA DEPARTMENT OF HEALTH
DIVISION OF AIR QUALITY
SFN 8535 (10-13)

SECTION A – FACILITY INFORMATION

Name of Firm or Organization ***Meridian Energy Group – Davis Refinery***		
Applicant´s Name ***Tom Williams***		
Title ***VP of Planning & Permitting***	Telephone Number ***(707) 299-0182***	E-mail Address ***twilliams@meridianenergygroup.inc***
Mailing Address (Street & No.) ***2062 Business Center Drive, Suite 115***		
City ***Irvine***	State ***CA***	ZIP Code ***92612***
Contact Person for Air Pollution Matters ***Tom Johnson***		
Title ***Vice President of Operations***	Telephone Number ***(409)795-0792***	E-mail Address ***tjohnson@meridianenergygroup.inc***

SECTION B – TANK DATA

Legal Description of Facility Site ***Property ID 07 0000 00165 000 in the SE 1/4 of Section 2, Twp 139N, Range 100W and*** ***Property ID: 07 0000 00162 000 in the NW1/4 and SW 1/4 of Section 1, Twp 139N, Range 100W***				
County ***Billings***		Source ID Number ***203-T-0006***		
Capacity	Barrels ***33,312***		Gallons ***1,399,104***	
Dimensions	Diameter ***63'***	Height ***60'***	Length	Width
Shape	☒Cylindrical	☐Spherical	☐Other – Specify:	
Materials of Construction	***Carbon Steel***			
Construction	☐Riveted	☒Welded	☐Other – Specify:	
Color	***Beige***			
Condition	☒Good	☐Fair	☐Poor	
Status	☒New Construction	☐Alteration	☐Existing (Give Date Constructed): _____	
Type of Tank	☐Fixed Roof ☐Variable Vapor Space ☐Pressure (low or high)		☐External Floating ☒ Internal Floating ☐Other – Specify:	
Type of Roof	☐Pan	☒Double Deck	☐Pontoon	☐Other – Specify:
Type of Seal	Metallic Shoe Seal	Liquid Mounted Resilient Seal	Vapor Mounted Resilient Seal	
	☐Primary Seal Only ☐With Rim Mounted Seal ☐With Shoe Mounted Secondary Seal	☐Primary Seal Only ☒With Rim Mounted Seal ☐With Weather Shield	☐Primary Seal Only ☐With Rim Mounted Seal ☐With Weather Shield	

SECTION C – TANK CONTENTS

Reformate, (RVP 3 psi)

SECTION D – VAPOR DISPOSAL

☒Atmosphere	☐Vapor Recovery Unit	☐Flare	☐Other – Specify:

SECTION E – VAPOR PRESSURE DATA

psia	
Maximum True Vapor Pressure **-**	Maximum Reid Vapor Pressure ***3***

SECTION F – OPERATIONAL DATA

Maximum Filling Rate (barrels per hour or gallons per hour) ***TBD***	Vapor Space Outage (See AP-42, 7.1-92, Equation 1-15) ***N/A***
Average Throughput (gallons per day) ***179,793.60***	Tank Turnovers per Year ***46.90***

SECTION G – SOLUTION STORAGE

If material stored is a solution, supply the following information:	
Name of Solvent ***N/A***	Name of Material Dissolved ***N/A***
Concentration of Material Dissolved (% by weight or % by volume or lbs/gal) ***N/A***	

SECTION H – AIR CONTAMINANTS EMITTED

Pollutant*	Maximum Pounds Per Hour	Tons Per Year	Basis and Calculations for Quantities (Attach separate sheet if needed)
2-Methyl naphthalene	***1.2E-04***	***5.3E-04***	***VOC from TANKS 4.0.9d software modeled runs.*** ***HAPs from Table 3-3 of the Emissions Estimation Protocol for Petroleum Refineries*** ***See Document P-5715043-01-001-18042-I001 "EMISSIONS INVENTORY" and P-5715043-01-001-18035-I001 "BACT Analysis"***
Anthracene	***8.3E-06***	***3.6E-05***	
Benzene	***2.4E-03***	***1.1E-02***	
Biphenyl	***5.9E-06***	***2.6E-05***	
Chrysene	***7.3E-06***	***3.2E-05***	
Cresol	***4.5E-04***	***2.0E-03***	
Cumene	***5.2E-04***	***2.3E-03***	
Ethylbenzene	***1.1E-03***	***4.7E-03***	
Fluorene	***1.2E-05***	***5.5E-05***	
Hexane	***1.5E-02***	***6.4E-02***	
Methanol	***1.3E-04***	***5.8E-04***	
Methyl isobutyl ketone	***1.1E-02***	***4.9E-02***	
Methyl tertiary-butyl ether	***1.1E-02***	***4.7E-02***	
Naphthalene	***2.6E-04***	***1.2E-03***	
Phenanthrene	***5.2E-05***	***2.3E-04***	
Phenol	***3.1E-05***	***1.4E-04***	
Pyrene	***1.4E-05***	***5.9E-05***	
Styrene	***2.3E-03***	***1.0E-02***	
Toluene	***6.2E-03***	***2.7E-02***	
Xylene	***4.8E-03***	***2.1E-02***	
VOC	***5.92E-02***	***2.59E-01***	

* Include an estimate of greenhouse gas emissions (CO_2e)

SECTION I – STANDARDS OF PERFORMANCE

Tank subject to:	☐40 CFR 60, Subpart K	☐40 CFR 60, Subpart Ka	☒40 CFR 60, Subpart Kb
Are the standards of performance for new stationary sources; petroleum liquid storage vessels, 40 CFR Part 60, Subparts K, Ka, and Kb being adhered to, where applicable? ☒Yes ☐ No – Explain:			

Signature of Applicant	Date
	09/26/2016

SEND COMPLETED APPLICATION AND ALL ATTACHMENTS TO:

North Dakota Department of Health
Division of Air Quality
918 E Divide Ave., 2nd Floor
Bismarck, ND 58501-1947
(701) 328-5188

PERMIT APPLICATION FOR
VOLATILE ORGANIC COMPOUNDS STORAGE TANK

NORTH DAKOTA DEPARTMENT OF HEALTH
DIVISION OF AIR QUALITY
SFN 8535 (10-13)

SECTION A – FACILITY INFORMATION

Name of Firm or Organization ***Meridian Energy Group – Davis Refinery***		
Applicant´s Name ***Tom Williams***		
Title ***VP of Planning & Permitting***	Telephone Number ***(707) 299-0182***	E-mail Address ***twilliams@meridianenergygroup.inc***
Mailing Address (Street & No.) ***2062 Business Center Drive, Suite 115***		
City ***Irvine***	State ***CA***	ZIP Code ***92612***
Contact Person for Air Pollution Matters ***Tom Johnson***		
Title ***Vice President of Operations***	Telephone Number ***(409)795-0792***	E-mail Address ***tjohnson@meridianenergygroup.inc***

SECTION B – TANK DATA

Legal Description of Facility Site ***Property ID 07 0000 00165 000 in the SE 1/4 of Section 2, Twp 139N, Range 100W and*** ***Property ID: 07 0000 00162 000 in the NW1/4 and SW 1/4 of Section 1, Twp 139N, Range 100W***				
County ***Billings***		Source ID Number ***203-T-0007***		
Capacity	Barrels ***33,312***		Gallons ***1,399,104***	
Dimensions	Diameter ***63'***	Height ***60'***	Length	Width
Shape	☒Cylindrical	☐Spherical	☐Other – Specify:	
Materials of Construction	***Carbon Steel***			
Construction	☐Riveted	☒Welded	☐Other – Specify:	
Color	***Beige***			
Condition	☒Good	☐Fair	☐Poor	
Status	☒New Construction	☐Alteration	☐Existing (Give Date Constructed): _____	
Type of Tank	☐Fixed Roof ☐Variable Vapor Space ☐Pressure (low or high)		☐External Floating ☒ Internal Floating ☐Other – Specify:	
Type of Roof	☐Pan	☒Double Deck	☐Pontoon	☐Other – Specify:
Type of Seal	Metallic Shoe Seal	Liquid Mounted Resilient Seal	Vapor Mounted Resilient Seal	
	☐Primary Seal Only ☐With Rim Mounted Seal ☐With Shoe Mounted Secondary Seal	☐Primary Seal Only ☒With Rim Mounted Seal ☐With Weather Shield	☐Primary Seal Only ☐With Rim Mounted Seal ☐With Weather Shield	

SECTION C – TANK CONTENTS

Reformate, (RVP 3 psi)

SECTION D – VAPOR DISPOSAL

☒Atmosphere	☐Vapor Recovery Unit	☐Flare	☐Other – Specify:

SECTION E – VAPOR PRESSURE DATA

psia	
Maximum True Vapor Pressure **-**	Maximum Reid Vapor Pressure ***3***

SECTION F – OPERATIONAL DATA

Maximum Filling Rate (barrels per hour or gallons per hour) ***TBD***	Vapor Space Outage (See AP-42, 7.1-92, Equation 1-15) ***N/A***
Average Throughput (gallons per day) ***179,793.60***	Tank Turnovers per Year ***46.90***

SECTION G – SOLUTION STORAGE

If material stored is a solution, supply the following information:	
Name of Solvent ***N/A***	Name of Material Dissolved ***N/A***
Concentration of Material Dissolved (% by weight or % by volume or lbs/gal) ***N/A***	

SECTION H – AIR CONTAMINANTS EMITTED

Pollutant*	Maximum Pounds Per Hour	Tons Per Year	Basis and Calculations for Quantities (Attach separate sheet if needed)
2-Methyl naphthalene	***1.2E-04***	***5.3E-04***	***VOC from TANKS 4.0.9d software modeled runs.*** ***HAPs from Table 3-3 of the Emissions Estimation Protocol for Petroleum Refineries*** ***See Document P-5715043-01-001-18042-I001 "EMISSIONS INVENTORY" and P-5715043-01-001-18035-I001 "BACT Analysis"***
Anthracene	***8.3E-06***	***3.6E-05***	
Benzene	***2.4E-03***	***1.1E-02***	
Biphenyl	***5.9E-06***	***2.6E-05***	
Chrysene	***7.3E-06***	***3.2E-05***	
Cresol	***4.5E-04***	***2.0E-03***	
Cumene	***5.2E-04***	***2.3E-03***	
Ethylbenzene	***1.1E-03***	***4.7E-03***	
Fluorene	***1.2E-05***	***5.5E-05***	
Hexane	***1.5E-02***	***6.4E-02***	
Methanol	***1.3E-04***	***5.8E-04***	
Methyl isobutyl ketone	***1.1E-02***	***4.9E-02***	
Methyl tertiary-butyl ether	***1.1E-02***	***4.7E-02***	
Naphthalene	***2.6E-04***	***1.2E-03***	
Phenanthrene	***5.2E-05***	***2.3E-04***	
Phenol	***3.1E-05***	***1.4E-04***	
Pyrene	***1.4E-05***	***5.9E-05***	
Styrene	***2.3E-03***	***1.0E-02***	
Toluene	***6.2E-03***	***2.7E-02***	
Xylene	***4.8E-03***	***2.1E-02***	
VOC	***5.92E-02***	***2.59E-01***	

* Include an estimate of greenhouse gas emissions (CO_2e)

SECTION I – STANDARDS OF PERFORMANCE

Tank subject to:	☐40 CFR 60, Subpart K	☐40 CFR 60, Subpart Ka	☒40 CFR 60, Subpart Kb
Are the standards of performance for new stationary sources; petroleum liquid storage vessels, 40 CFR Part 60, Subparts K, Ka, and Kb being adhered to, where applicable? ☒Yes ☐ No – Explain:			

Signature of Applicant	Date
	09/26/2016

SEND COMPLETED APPLICATION AND ALL ATTACHMENTS TO:

North Dakota Department of Health
Division of Air Quality
918 E Divide Ave., 2nd Floor
Bismarck, ND 58501-1947
(701) 328-5188

PERMIT APPLICATION FOR
VOLATILE ORGANIC COMPOUNDS STORAGE TANK

NORTH DAKOTA DEPARTMENT OF HEALTH
DIVISION OF AIR QUALITY
SFN 8535 (10-13)

SECTION A – FACILITY INFORMATION

Name of Firm or Organization ***Meridian Energy Group – Davis Refinery***		
Applicant´s Name ***Tom Williams***		
Title ***VP of Planning & Permitting***	Telephone Number ***(707) 299-0182***	E-mail Address ***twilliams@meridianenergygroup.inc***
Mailing Address (Street & No.) ***2062 Business Center Drive, Suite 115***		
City ***Irvine***	State ***CA***	ZIP Code ***92612***
Contact Person for Air Pollution Matters ***Tom Johnson***		
Title ***Vice President of Operations***	Telephone Number ***(409)795-0792***	E-mail Address ***tjohnson@meridianenergygroup.inc***

SECTION B – TANK DATA

Legal Description of Facility Site ***Property ID 07 0000 00165 000 in the SE 1/4 of Section 2, Twp 139N, Range 100W and*** ***Property ID: 07 0000 00162 000 in the NW1/4 and SW 1/4 of Section 1, Twp 139N, Range 100W***				
County ***Billings***		Source ID Number ***203-T-0008***		
Capacity	Barrels ***64,996***		Gallons ***2,729,832***	
Dimensions	Diameter ***88'***	Height ***60'***	Length	Width
Shape	☒Cylindrical	☐Spherical	☐Other – Specify:	
Materials of Construction	***Carbon Steel***			
Construction	☐Riveted	☒Welded	☐Other – Specify:	
Color	***Beige***			
Condition	☒Good	☐Fair	☐Poor	
Status	☒New Construction	☐Alteration	☐Existing (Give Date Constructed): _____	
Type of Tank	☐Fixed Roof ☐Variable Vapor Space ☐Pressure (low or high)		☐External Floating ☒ Internal Floating ☐Other – Specify:	
Type of Roof	☐Pan	☒Double Deck	☐Pontoon	☐Other – Specify:
Type of Seal	Metallic Shoe Seal	Liquid Mounted Resilient Seal	Vapor Mounted Resilient Seal	
	☐Primary Seal Only ☐With Rim Mounted Seal ☐With Shoe Mounted Secondary Seal	☐Primary Seal Only ☒With Rim Mounted Seal ☐With Weather Shield	☐Primary Seal Only ☐With Rim Mounted Seal ☐With Weather Shield	

SECTION C – TANK CONTENTS

Gasoline, (RVP 13-15 psi)

SECTION D – VAPOR DISPOSAL

☒Atmosphere	☐Vapor Recovery Unit	☐Flare	☐Other – Specify:

SECTION E – VAPOR PRESSURE DATA

psia	
Maximum True Vapor Pressure **-**	Maximum Reid Vapor Pressure ***13-15***

SECTION F – OPERATIONAL DATA

Maximum Filling Rate (barrels per hour or gallons per hour) ***TBD***	Vapor Space Outage (See AP-42, 7.1-92, Equation 1-15) ***N/A***
Average Throughput (gallons per day) ***416,780***	Tank Turnovers per Year ***55.73***

SECTION G – SOLUTION STORAGE

If material stored is a solution, supply the following information:	
Name of Solvent ***N/A***	Name of Material Dissolved ***N/A***
Concentration of Material Dissolved (% by weight or % by volume or lbs/gal) ***N/A***	

SECTION H – AIR CONTAMINANTS EMITTED

Pollutant*	Maximum Pounds Per Hour	Tons Per Year	Basis and Calculations for Quantities (Attach separate sheet if needed)
2-Methyl naphthalene	***2.4E-04***	***1.0E-03***	***VOC from TANKS 4.0.9d software modeled runs.*** ***HAPs from Table 3-3 of the Emissions Estimation Protocol for Petroleum Refineries*** ***See Document P-5715043-01-001-18042-I001 "EMISSIONS INVENTORY" and P-5715043-01-001-18035-I001 "BACT Analysis"***
Anthracene	***1.6E-05***	***7.1E-05***	
Benzene	***4.7E-03***	***2.1E-02***	
Biphenyl	***1.1E-05***	***5.0E-05***	
Chrysene	***1.4E-05***	***6.2E-05***	
Cresol	***8.8E-04***	***3.8E-03***	
Cumene	***1.0E-03***	***4.4E-03***	
Ethylbenzene	***2.1E-03***	***9.2E-03***	
Fluorene	***2.4E-05***	***1.1E-04***	
Hexane	***2.8E-02***	***1.2E-01***	
Methanol	***2.6E-04***	***1.1E-03***	
Methyl isobutyl ketone	***2.2E-02***	***9.5E-02***	
Methyl tertiary-butyl ether	***2.1E-02***	***9.2E-02***	
Naphthalene	***5.1E-04***	***2.2E-03***	
Phenanthrene	***1.0E-04***	***4.4E-04***	
Phenol	***6.1E-05***	***2.7E-04***	
Pyrene	***2.6E-05***	***1.2E-04***	
Styrene	***4.5E-03***	***2.0E-02***	
Toluene	***1.2E-02***	***5.3E-02***	
Xylene	***9.5E-03***	***4.1E-02***	
VOC	***1.20E-01***	***5.24E-01***	

* Include an estimate of greenhouse gas emissions (CO_2e)

SECTION I – STANDARDS OF PERFORMANCE

Tank subject to:	☐40 CFR 60, Subpart K	☐40 CFR 60, Subpart Ka	☒40 CFR 60, Subpart Kb
Are the standards of performance for new stationary sources; petroleum liquid storage vessels, 40 CFR Part 60, Subparts K, Ka, and Kb being adhered to, where applicable? ☒Yes ☐ No – Explain:			

Signature of Applicant	Date
	09/26/2016

SEND COMPLETED APPLICATION AND ALL ATTACHMENTS TO:

North Dakota Department of Health
Division of Air Quality
918 E Divide Ave., 2nd Floor
Bismarck, ND 58501-1947
(701) 328-5188

PERMIT APPLICATION FOR
VOLATILE ORGANIC COMPOUNDS STORAGE TANK

NORTH DAKOTA DEPARTMENT OF HEALTH
DIVISION OF AIR QUALITY
SFN 8535 (10-13)

SECTION A – FACILITY INFORMATION

Name of Firm or Organization ***Meridian Energy Group – Davis Refinery***		
Applicant´s Name ***Tom Williams***		
Title ***VP of Planning & Permitting***	Telephone Number ***(707) 299-0182***	E-mail Address ***twilliams@meridianenergygroup.inc***
Mailing Address (Street & No.) ***2062 Business Center Drive, Suite 115***		
City ***Irvine***	State ***CA***	ZIP Code ***92612***
Contact Person for Air Pollution Matters ***Tom Johnson***		
Title ***Vice President of Operations***	Telephone Number ***(409)795-0792***	E-mail Address ***tjohnson@meridianenergygroup.inc***

SECTION B – TANK DATA

Legal Description of Facility Site ***Property ID 07 0000 00165 000 in the SE 1/4 of Section 2, Twp 139N, Range 100W and*** ***Property ID: 07 0000 00162 000 in the NW1/4 and SW 1/4 of Section 1, Twp 139N, Range 100W***				
County ***Billings***		Source ID Number ***203-T-0009***		
Capacity	Barrels ***64,996***		Gallons ***2,729,832***	
Dimensions	Diameter ***88'***	Height ***60'***	Length	Width
Shape	☒Cylindrical	☐Spherical	☐Other – Specify:	
Materials of Construction	***Carbon Steel***			
Construction	☐Riveted	☒Welded	☐Other – Specify:	
Color	***Beige***			
Condition	☒Good	☐Fair	☐Poor	
Status	☒New Construction	☐Alteration	☐Existing (Give Date Constructed): _____	
Type of Tank	☐Fixed Roof ☐Variable Vapor Space ☐Pressure (low or high)		☐External Floating ☒ Internal Floating ☐Other – Specify:	
Type of Roof	☐Pan	☒Double Deck	☐Pontoon	☐Other – Specify:
Type of Seal	Metallic Shoe Seal	Liquid Mounted Resilient Seal	Vapor Mounted Resilient Seal	
	☐Primary Seal Only ☐With Rim Mounted Seal ☐With Shoe Mounted Secondary Seal	☐Primary Seal Only ☒With Rim Mounted Seal ☐With Weather Shield	☐Primary Seal Only ☐With Rim Mounted Seal ☐With Weather Shield	

SECTION C – TANK CONTENTS

Gasoline, (RVP 13-15 psi)

SECTION D – VAPOR DISPOSAL

☒Atmosphere	☐Vapor Recovery Unit	☐Flare	☐Other – Specify:

SECTION E – VAPOR PRESSURE DATA

psia	
Maximum True Vapor Pressure **-**	Maximum Reid Vapor Pressure ***13-15***

SECTION F – OPERATIONAL DATA

Maximum Filling Rate (barrels per hour or gallons per hour) ***TBD***	Vapor Space Outage (See AP-42, 7.1-92, Equation 1-15) ***N/A***
Average Throughput (gallons per day) ***416,780***	Tank Turnovers per Year ***55.73***

SECTION G – SOLUTION STORAGE

If material stored is a solution, supply the following information:	
Name of Solvent ***N/A***	Name of Material Dissolved ***N/A***
Concentration of Material Dissolved (% by weight or % by volume or lbs/gal) ***N/A***	

SECTION H – AIR CONTAMINANTS EMITTED

Pollutant*	Maximum Pounds Per Hour	Tons Per Year	Basis and Calculations for Quantities (Attach separate sheet if needed)
2-Methyl naphthalene	***2.4E-04***	***1.0E-03***	***VOC from TANKS 4.0.9d software modeled runs.*** ***HAPs from Table 3-3 of the Emissions Estimation Protocol for Petroleum Refineries*** ***See Document P-5715043-01-001-18042-I001 "EMISSIONS INVENTORY" and P-5715043-01-001-18035-I001 "BACT Analysis"***
Anthracene	***1.6E-05***	***7.1E-05***	
Benzene	***4.7E-03***	***2.1E-02***	
Biphenyl	***1.1E-05***	***5.0E-05***	
Chrysene	***1.4E-05***	***6.2E-05***	
Cresol	***8.8E-04***	***3.8E-03***	
Cumene	***1.0E-03***	***4.4E-03***	
Ethylbenzene	***2.1E-03***	***9.2E-03***	
Fluorene	***2.4E-05***	***1.1E-04***	
Hexane	***2.8E-02***	***1.2E-01***	
Methanol	***2.6E-04***	***1.1E-03***	
Methyl isobutyl ketone	***2.2E-02***	***9.5E-02***	
Methyl tertiary-butyl ether	***2.1E-02***	***9.2E-02***	
Naphthalene	***5.1E-04***	***2.2E-03***	
Phenanthrene	***1.0E-04***	***4.4E-04***	
Phenol	***6.1E-05***	***2.7E-04***	
Pyrene	***2.6E-05***	***1.2E-04***	
Styrene	***4.5E-03***	***2.0E-02***	
Toluene	***1.2E-02***	***5.3E-02***	
Xylene	***9.5E-03***	***4.1E-02***	
VOC	***1.20E-01***	***5.24E-01***	

* Include an estimate of greenhouse gas emissions (CO_2e)

SECTION I – STANDARDS OF PERFORMANCE

Tank subject to:	☐40 CFR 60, Subpart K	☐40 CFR 60, Subpart Ka	☒40 CFR 60, Subpart Kb
Are the standards of performance for new stationary sources; petroleum liquid storage vessels, 40 CFR Part 60, Subparts K, Ka, and Kb being adhered to, where applicable? ☒Yes ☐ No – Explain:			

Signature of Applicant	Date
	09/26/2016

SEND COMPLETED APPLICATION AND ALL ATTACHMENTS TO:

North Dakota Department of Health
Division of Air Quality
918 E Divide Ave., 2nd Floor
Bismarck, ND 58501-1947
(701) 328-5188

PERMIT APPLICATION FOR
VOLATILE ORGANIC COMPOUNDS STORAGE TANK

NORTH DAKOTA DEPARTMENT OF HEALTH
DIVISION OF AIR QUALITY
SFN 8535 (10-13)

SECTION A – FACILITY INFORMATION

Name of Firm or Organization ***Meridian Energy Group – Davis Refinery***		
Applicant´s Name ***Tom Williams***		
Title ***VP of Planning & Permitting***	Telephone Number ***(707) 299-0182***	E-mail Address ***twilliams@meridianenergygroup.inc***
Mailing Address (Street & No.) ***2062 Business Center Drive, Suite 115***		
City ***Irvine***	State ***CA***	ZIP Code ***92612***
Contact Person for Air Pollution Matters ***Tom Johnson***		
Title ***Vice President of Operations***	Telephone Number ***(409)795-0792***	E-mail Address ***tjohnson@meridianenergygroup.inc***

SECTION B – TANK DATA

Legal Description of Facility Site ***Property ID 07 0000 00165 000 in the SE 1/4 of Section 2, Twp 139N, Range 100W and*** ***Property ID: 07 0000 00162 000 in the NW1/4 and SW 1/4 of Section 1, Twp 139N, Range 100W***				
County ***Billings***		Source ID Number ***203-T-0010***		
Capacity	Barrels ***64,996***		Gallons ***2,729,832***	
Dimensions	Diameter ***88'***	Height ***60'***	Length	Width
Shape	☒Cylindrical	☐Spherical	☐Other – Specify:	
Materials of Construction	***Carbon Steel***			
Construction	☐Riveted	☒Welded	☐Other – Specify:	
Color	***Beige***			
Condition	☒Good	☐Fair	☐Poor	
Status	☒New Construction	☐Alteration	☐Existing (Give Date Constructed): _____	
Type of Tank	☐Fixed Roof ☐Variable Vapor Space ☐Pressure (low or high)		☐External Floating ☒ Internal Floating ☐Other – Specify:	
Type of Roof	☐Pan	☒Double Deck	☐Pontoon	☐Other – Specify:
Type of Seal	Metallic Shoe Seal	Liquid Mounted Resilient Seal	Vapor Mounted Resilient Seal	
	☐Primary Seal Only ☐With Rim Mounted Seal ☐With Shoe Mounted Secondary Seal	☐Primary Seal Only ☒With Rim Mounted Seal ☐With Weather Shield	☐Primary Seal Only ☐With Rim Mounted Seal ☐With Weather Shield	

SECTION C – TANK CONTENTS

Gasoline, (RVP 13-15 psi)

SECTION D – VAPOR DISPOSAL

☒Atmosphere	☐Vapor Recovery Unit	☐Flare	☐Other – Specify:

SECTION E – VAPOR PRESSURE DATA

psia	
Maximum True Vapor Pressure **-**	Maximum Reid Vapor Pressure ***13-15***

SECTION F – OPERATIONAL DATA

Maximum Filling Rate (barrels per hour or gallons per hour) ***TBD***	Vapor Space Outage (See AP-42, 7.1-92, Equation 1-15) ***N/A***
Average Throughput (gallons per day) ***416,780***	Tank Turnovers per Year ***55.73***

SECTION G – SOLUTION STORAGE

If material stored is a solution, supply the following information:	
Name of Solvent ***N/A***	Name of Material Dissolved ***N/A***
Concentration of Material Dissolved (% by weight or % by volume or lbs/gal) ***N/A***	

SECTION H – AIR CONTAMINANTS EMITTED

Pollutant*	Maximum Pounds Per Hour	Tons Per Year	Basis and Calculations for Quantities (Attach separate sheet if needed)
2-Methyl naphthalene	***2.4E-04***	***1.0E-03***	***VOC from TANKS 4.0.9d software modeled runs.*** ***HAPs from Table 3-3 of the Emissions Estimation Protocol for Petroleum Refineries*** ***See Document P-5715043-01-001-18042-I001 "EMISSIONS INVENTORY" and P-5715043-01-001-18035-I001 "BACT Analysis"***
Anthracene	***1.6E-05***	***7.1E-05***	
Benzene	***4.7E-03***	***2.1E-02***	
Biphenyl	***1.1E-05***	***5.0E-05***	
Chrysene	***1.4E-05***	***6.2E-05***	
Cresol	***8.8E-04***	***3.8E-03***	
Cumene	***1.0E-03***	***4.4E-03***	
Ethylbenzene	***2.1E-03***	***9.2E-03***	
Fluorene	***2.4E-05***	***1.1E-04***	
Hexane	***2.8E-02***	***1.2E-01***	
Methanol	***2.6E-04***	***1.1E-03***	
Methyl isobutyl ketone	***2.2E-02***	***9.5E-02***	
Methyl tertiary-butyl ether	***2.1E-02***	***9.2E-02***	
Naphthalene	***5.1E-04***	***2.2E-03***	
Phenanthrene	***1.0E-04***	***4.4E-04***	
Phenol	***6.1E-05***	***2.7E-04***	
Pyrene	***2.6E-05***	***1.2E-04***	
Styrene	***4.5E-03***	***2.0E-02***	
Toluene	***1.2E-02***	***5.3E-02***	
Xylene	***9.5E-03***	***4.1E-02***	
VOC	***1.20E-01***	***5.24E-01***	

* Include an estimate of greenhouse gas emissions (CO_2e)

SECTION I – STANDARDS OF PERFORMANCE

Tank subject to:	☐40 CFR 60, Subpart K	☐40 CFR 60, Subpart Ka	☒40 CFR 60, Subpart Kb
Are the standards of performance for new stationary sources; petroleum liquid storage vessels, 40 CFR Part 60, Subparts K, Ka, and Kb being adhered to, where applicable? ☒Yes ☐ No – Explain:			

Signature of Applicant	Date
	09/26/2016

SEND COMPLETED APPLICATION AND ALL ATTACHMENTS TO:

North Dakota Department of Health
Division of Air Quality
918 E Divide Ave., 2nd Floor
Bismarck, ND 58501-1947
(701) 328-5188

PERMIT APPLICATION FOR
VOLATILE ORGANIC COMPOUNDS STORAGE TANK

NORTH DAKOTA DEPARTMENT OF HEALTH
DIVISION OF AIR QUALITY
SFN 8535 (10-13)

SECTION A – FACILITY INFORMATION

Name of Firm or Organization ***Meridian Energy Group – Davis Refinery***		
Applicant´s Name ***Tom Williams***		
Title ***VP of Planning & Permitting***	Telephone Number ***(707) 299-0182***	E-mail Address ***twilliams@meridianenergygroup.inc***
Mailing Address (Street & No.) ***2062 Business Center Drive, Suite 115***		
City ***Irvine***	State ***CA***	ZIP Code ***92612***
Contact Person for Air Pollution Matters ***Tom Johnson***		
Title ***Vice President of Operations***	Telephone Number ***(409)795-0792***	E-mail Address ***tjohnson@meridianenergygroup.inc***

SECTION B – TANK DATA

Legal Description of Facility Site ***Property ID 07 0000 00165 000 in the SE 1/4 of Section 2, Twp 139N, Range 100W and*** ***Property ID: 07 0000 00162 000 in the NW1/4 and SW 1/4 of Section 1, Twp 139N, Range 100W***				
County ***Billings***		Source ID Number ***203-T-0011***		
Capacity	Barrels ***33,312***		Gallons ***1,399,104***	
Dimensions	Diameter ***63'***	Height ***60'***	Length	Width
Shape	☒Cylindrical	☐Spherical	☐Other – Specify:	
Materials of Construction	***Carbon Steel***			
Construction	☐Riveted	☒Welded	☐Other – Specify:	
Color	***Beige***			
Condition	☒Good	☐Fair	☐Poor	
Status	☒New Construction	☐Alteration	☐Existing (Give Date Constructed): _____	
Type of Tank	☐Fixed Roof ☐Variable Vapor Space ☐Pressure (low or high)		☐External Floating ☒ Internal Floating ☐Other – Specify:	
Type of Roof	☐Pan	☒Double Deck	☐Pontoon	☐Other – Specify:
Type of Seal	Metallic Shoe Seal	Liquid Mounted Resilient Seal	Vapor Mounted Resilient Seal	
	☐Primary Seal Only ☐With Rim Mounted Seal ☐With Shoe Mounted Secondary Seal	☐Primary Seal Only ☒With Rim Mounted Seal ☐With Weather Shield	☐Primary Seal Only ☐With Rim Mounted Seal ☐With Weather Shield	

SECTION C – TANK CONTENTS

Jet Fuel, (TVP 0.04 psia)

SECTION D – VAPOR DISPOSAL

☒Atmosphere	☐Vapor Recovery Unit	☐Flare	☐Other – Specify:

SECTION E – VAPOR PRESSURE DATA

psia	
Maximum True Vapor Pressure ***0.04***	Maximum Reid Vapor Pressure ***-***

SECTION F – OPERATIONAL DATA

Maximum Filling Rate (barrels per hour or gallons per hour) ***TBD***	Vapor Space Outage (See AP-42, 7.1-92, Equation 1-15) ***N/A***
Average Throughput (gallons per day) ***89,250***	Tank Turnovers per Year ***23.28***

SECTION G – SOLUTION STORAGE

If material stored is a solution, supply the following information:	
Name of Solvent ***N/A***	Name of Material Dissolved ***N/A***
Concentration of Material Dissolved (% by weight or % by volume or lbs/gal) ***N/A***	

SECTION H – AIR CONTAMINANTS EMITTED

Pollutant*	Maximum Pounds Per Hour	Tons Per Year	Basis and Calculations for Quantities (Attach separate sheet if needed)
2-Methyl naphthalene	***1.2E-05***	***5.1E-05***	***VOC from TANKS 4.0.9d software modeled runs.*** ***HAPs from Table 3-3 of the Emissions Estimation Protocol for Petroleum Refineries*** ***See Document P-5715043-01-001-18042-I001 "EMISSIONS INVENTORY" and P-5715043-01-001-18035-I001 "BACT Analysis"***
Anthracene	***7.9E-07***	***3.5E-06***	
Benzene	***1.8E-04***	***7.8E-04***	
Biphenyl	***0.0E+00***	***0.0E+00***	
Chrysene	***6.9E-07***	***3.0E-06***	
Cresol	***6.3E-07***	***2.7E-06***	
Cumene	***3.3E-05***	***1.4E-04***	
Ethylbenzene	***5.9E-05***	***2.6E-04***	
Fluorene	***1.2E-06***	***5.2E-06***	
Hexane	***1.6E-03***	***6.9E-03***	
Methanol	***1.3E-05***	***5.5E-05***	
Methyl isobutyl ketone	***1.1E-03***	***4.6E-03***	
Methyl tertiary-butyl ether	***0.0E+00***	***0.0E+00***	
Naphthalene	***1.3E-05***	***5.8E-05***	
Phenanthrene	***5.0E-06***	***2.2E-05***	
Phenol	***2.2E-06***	***9.7E-06***	
Pyrene	***1.3E-06***	***5.6E-06***	
Styrene	***0.0E+00***	***0.0E+00***	
Toluene	***3.3E-04***	***1.4E-03***	
Xylene	***2.3E-04***	***1.0E-03***	
VOC	***2.57E-02***	***1.13E-01***	

* Include an estimate of greenhouse gas emissions (CO_2e)

SECTION I – STANDARDS OF PERFORMANCE

Tank subject to:	☐40 CFR 60, Subpart K	☐40 CFR 60, Subpart Ka	☒40 CFR 60, Subpart Kb
Are the standards of performance for new stationary sources; petroleum liquid storage vessels, 40 CFR Part 60, Subparts K, Ka, and Kb being adhered to, where applicable? ☒Yes ☐ No – Explain:			

Signature of Applicant	Date
	09/26/2016

SEND COMPLETED APPLICATION AND ALL ATTACHMENTS TO:

North Dakota Department of Health
Division of Air Quality
918 E Divide Ave., 2nd Floor
Bismarck, ND 58501-1947
(701) 328-5188

PERMIT APPLICATION FOR
VOLATILE ORGANIC COMPOUNDS STORAGE TANK

NORTH DAKOTA DEPARTMENT OF HEALTH
DIVISION OF AIR QUALITY
SFN 8535 (10-13)

SECTION A – FACILITY INFORMATION

Name of Firm or Organization ***Meridian Energy Group – Davis Refinery***		
Applicant´s Name ***Tom Williams***		
Title ***VP of Planning & Permitting***	Telephone Number ***(707) 299-0182***	E-mail Address ***twilliams@meridianenergygroup.inc***
Mailing Address (Street & No.) ***2062 Business Center Drive, Suite 115***		
City ***Irvine***	State ***CA***	ZIP Code ***92612***
Contact Person for Air Pollution Matters ***Tom Johnson***		
Title ***Vice President of Operations***	Telephone Number ***(409)795-0792***	E-mail Address ***tjohnson@meridianenergygroup.inc***

SECTION B – TANK DATA

Legal Description of Facility Site ***Property ID 07 0000 00165 000 in the SE 1/4 of Section 2, Twp 139N, Range 100W and*** ***Property ID: 07 0000 00162 000 in the NW1/4 and SW 1/4 of Section 1, Twp 139N, Range 100W***				
County ***Billings***		Source ID Number ***203-T-0012***		
Capacity	Barrels ***33,312***		Gallons ***1,399,104***	
Dimensions	Diameter ***63'***	Height ***60'***	Length	Width
Shape	☒Cylindrical	☐Spherical	☐Other – Specify:	
Materials of Construction	***Carbon Steel***			
Construction	☐Riveted	☒Welded	☐Other – Specify:	
Color	***Beige***			
Condition	☒Good	☐Fair	☐Poor	
Status	☒New Construction	☐Alteration	☐Existing (Give Date Constructed): _____	
Type of Tank	☐Fixed Roof ☐Variable Vapor Space ☐Pressure (low or high)		☐External Floating ☒ Internal Floating ☐Other – Specify:	
Type of Roof	☐Pan	☒Double Deck	☐Pontoon	☐Other – Specify:
Type of Seal	Metallic Shoe Seal	Liquid Mounted Resilient Seal	Vapor Mounted Resilient Seal	
	☐Primary Seal Only ☐With Rim Mounted Seal ☐With Shoe Mounted Secondary Seal	☐Primary Seal Only ☒With Rim Mounted Seal ☐With Weather Shield	☐Primary Seal Only ☐With Rim Mounted Seal ☐With Weather Shield	

SECTION C – TANK CONTENTS

Jet Fuel, (TVP 0.04 psia)

SECTION D – VAPOR DISPOSAL

☒Atmosphere	☐Vapor Recovery Unit	☐Flare	☐Other – Specify:

SECTION E – VAPOR PRESSURE DATA

psia	
Maximum True Vapor Pressure ***0.04***	Maximum Reid Vapor Pressure ***-***

SECTION F – OPERATIONAL DATA

Maximum Filling Rate (barrels per hour or gallons per hour) ***TBD***	Vapor Space Outage (See AP-42, 7.1-92, Equation 1-15) ***N/A***
Average Throughput (gallons per day) ***89,250***	Tank Turnovers per Year ***23.28***

SECTION G – SOLUTION STORAGE

If material stored is a solution, supply the following information:	
Name of Solvent ***N/A***	Name of Material Dissolved ***N/A***
Concentration of Material Dissolved (% by weight or % by volume or lbs/gal) ***N/A***	

SECTION H – AIR CONTAMINANTS EMITTED

Pollutant*	Maximum Pounds Per Hour	Tons Per Year	Basis and Calculations for Quantities (Attach separate sheet if needed)
2-Methyl naphthalene	***1.2E-05***	***5.1E-05***	***VOC from TANKS 4.0.9d software modeled runs.*** ***HAPs from Table 3-3 of the Emissions Estimation Protocol for Petroleum Refineries*** ***See Document P-5715043-01-001-18042-I001 "EMISSIONS INVENTORY" and P-5715043-01-001-18035-I001 "BACT Analysis"***
Anthracene	***7.9E-07***	***3.5E-06***	
Benzene	***1.8E-04***	***7.8E-04***	
Biphenyl	***0.0E+00***	***0.0E+00***	
Chrysene	***6.9E-07***	***3.0E-06***	
Cresol	***6.3E-07***	***2.7E-06***	
Cumene	***3.3E-05***	***1.4E-04***	
Ethylbenzene	***5.9E-05***	***2.6E-04***	
Fluorene	***1.2E-06***	***5.2E-06***	
Hexane	***1.6E-03***	***6.9E-03***	
Methanol	***1.3E-05***	***5.5E-05***	
Methyl isobutyl ketone	***1.1E-03***	***4.6E-03***	
Methyl tertiary-butyl ether	***0.0E+00***	***0.0E+00***	
Naphthalene	***1.3E-05***	***5.8E-05***	
Phenanthrene	***5.0E-06***	***2.2E-05***	
Phenol	***2.2E-06***	***9.7E-06***	
Pyrene	***1.3E-06***	***5.6E-06***	
Styrene	***0.0E+00***	***0.0E+00***	
Toluene	***3.3E-04***	***1.4E-03***	
Xylene	***2.3E-04***	***1.0E-03***	
VOC	***2.57E-02***	***1.13E-01***	

* Include an estimate of greenhouse gas emissions (CO_2e)

SECTION I – STANDARDS OF PERFORMANCE

Tank subject to:	☐40 CFR 60, Subpart K	☐40 CFR 60, Subpart Ka	☒40 CFR 60, Subpart Kb
Are the standards of performance for new stationary sources; petroleum liquid storage vessels, 40 CFR Part 60, Subparts K, Ka, and Kb being adhered to, where applicable? ☒Yes ☐ No – Explain:			

Signature of Applicant	Date
	09/26/2016

SEND COMPLETED APPLICATION AND ALL ATTACHMENTS TO:

North Dakota Department of Health
Division of Air Quality
918 E Divide Ave., 2nd Floor
Bismarck, ND 58501-1947
(701) 328-5188

PERMIT APPLICATION FOR
VOLATILE ORGANIC COMPOUNDS STORAGE TANK

NORTH DAKOTA DEPARTMENT OF HEALTH
DIVISION OF AIR QUALITY
SFN 8535 (10-13)

SECTION A – FACILITY INFORMATION

Name of Firm or Organization ***Meridian Energy Group – Davis Refinery***		
Applicant´s Name ***Tom Williams***		
Title ***VP of Planning & Permitting***	Telephone Number ***(707) 299-0182***	E-mail Address ***twilliams@meridianenergygroup.inc***
Mailing Address (Street & No.) ***2062 Business Center Drive, Suite 115***		
City ***Irvine***	State ***CA***	ZIP Code ***92612***
Contact Person for Air Pollution Matters ***Tom Johnson***		
Title ***Vice President of Operations***	Telephone Number ***(409)795-0792***	E-mail Address ***tjohnson@meridianenergygroup.inc***

SECTION B – TANK DATA

Legal Description of Facility Site ***Property ID 07 0000 00165 000 in the SE 1/4 of Section 2, Twp 139N, Range 100W and*** ***Property ID: 07 0000 00162 000 in the NW1/4 and SW 1/4 of Section 1, Twp 139N, Range 100W***				
County ***Billings***		Source ID Number ***203-T-0013***		
Capacity	Barrels ***33,312***		Gallons ***1,399,104***	
Dimensions	Diameter ***63'***	Height ***60'***	Length	Width
Shape	☒Cylindrical	☐Spherical	☐Other – Specify:	
Materials of Construction	***Carbon Steel***			
Construction	☐Riveted	☒Welded	☐Other – Specify:	
Color	***Beige***			
Condition	☒Good	☐Fair	☐Poor	
Status	☒New Construction	☐Alteration	☐Existing (Give Date Constructed): _____	
Type of Tank	☒Fixed Roof ☐Variable Vapor Space ☐Pressure (low or high)		☐External Floating ☐ Internal Floating ☐Other – Specify:	
Type of Roof	☐Pan	☐Double Deck	☐Pontoon	☒Other – Specify: ***Cone Roof***
Type of Seal	Metallic Shoe Seal	Liquid Mounted Resilient Seal	Vapor Mounted Resilient Seal	
	☐Primary Seal Only ☐With Rim Mounted Seal ☐With Shoe Mounted Secondary Seal	☐Primary Seal Only ☐With Rim Mounted Seal ☐With Weather Shield	☐Primary Seal Only ☐With Rim Mounted Seal ☐With Weather Shield	

SECTION C – TANK CONTENTS

Undesulphurized Diesel, (TVP 0.004 psia)

SECTION D – VAPOR DISPOSAL

☐Atmosphere	☒Vapor Recovery Unit	☐Flare	☐Other – Specify:

SECTION E – VAPOR PRESSURE DATA

psia	
Maximum True Vapor Pressure ***0.004***	Maximum Reid Vapor Pressure ***-***

SECTION F – OPERATIONAL DATA

Maximum Filling Rate (barrels per hour or gallons per hour) ***TBD***	Vapor Space Outage (See AP-42, 7.1-92, Equation 1-15) ***41.67***
Average Throughput (gallons per day) ***88,208.4***	Tank Turnovers per Year ***27.61***

SECTION G – SOLUTION STORAGE

If material stored is a solution, supply the following information:	
Name of Solvent ***N/A***	Name of Material Dissolved ***N/A***
Concentration of Material Dissolved (% by weight or % by volume or lbs/gal) ***N/A***	

SECTION H – AIR CONTAMINANTS EMITTED

Pollutant*	Maximum Pounds Per Hour	Tons Per Year	Basis and Calculations for Quantities (Attach separate sheet if needed)
2-Methyl naphthalene	***1.2E-05***	***5.1E-05***	***VOC from TANKS 4.0.9d software modeled runs.*** ***HAPs from Table 3-3 of the Emissions Estimation Protocol for Petroleum Refineries*** ***See Document P-5715043-01-001-18042-I001 "EMISSIONS INVENTORY" and P-5715043-01-001-18035-I001 "BACT Analysis"***
Anthracene	***7.9E-07***	***3.5E-06***	
Benzene	***1.8E-04***	***7.8E-04***	
Biphenyl	***0.0E+00***	***0.0E+00***	
Chrysene	***6.9E-07***	***3.0E-06***	
Cresol	***6.3E-07***	***2.7E-06***	
Cumene	***3.3E-05***	***1.4E-04***	
Ethylbenzene	***5.9E-05***	***2.6E-04***	
Fluorene	***1.2E-06***	***5.2E-06***	
Hexane	***1.6E-03***	***6.9E-03***	
Methanol	***1.3E-05***	***5.5E-05***	
Methyl isobutyl ketone	***1.1E-03***	***4.6E-03***	
Methyl tertiary-butyl ether	***0.0E+00***	***0.0E+00***	
Naphthalene	***1.3E-05***	***5.8E-05***	
Phenanthrene	***5.0E-06***	***2.2E-05***	
Phenol	***2.2E-06***	***9.7E-06***	
Pyrene	***1.3E-06***	***5.6E-06***	
Styrene	***0.0E+00***	***0.0E+00***	
Toluene	***3.3E-04***	***1.4E-03***	
Xylene	***2.3E-04***	***1.0E-03***	
VOC	***4.29E-03***	***1.88E-02***	

* Include an estimate of greenhouse gas emissions (CO_2e)

SECTION I – STANDARDS OF PERFORMANCE

Tank subject to:	☐40 CFR 60, Subpart K	☐40 CFR 60, Subpart Ka	☒40 CFR 60, Subpart Kb
Are the standards of performance for new stationary sources; petroleum liquid storage vessels, 40 CFR Part 60, Subparts K, Ka, and Kb being adhered to, where applicable? ☒Yes ☐ No – Explain:			

Signature of Applicant	Date
	09/26/2016

SEND COMPLETED APPLICATION AND ALL ATTACHMENTS TO:

North Dakota Department of Health
Division of Air Quality
918 E Divide Ave., 2nd Floor
Bismarck, ND 58501-1947
(701) 328-5188

PERMIT APPLICATION FOR
VOLATILE ORGANIC COMPOUNDS STORAGE TANK

NORTH DAKOTA DEPARTMENT OF HEALTH
DIVISION OF AIR QUALITY
SFN 8535 (10-13)

SECTION A – FACILITY INFORMATION

Name of Firm or Organization ***Meridian Energy Group – Davis Refinery***		
Applicant´s Name ***Tom Williams***		
Title ***VP of Planning & Permitting***	Telephone Number ***(707) 299-0182***	E-mail Address ***twilliams@meridianenergygroup.inc***
Mailing Address (Street & No.) ***2062 Business Center Drive, Suite 115***		
City ***Irvine***	State ***CA***	ZIP Code ***92612***
Contact Person for Air Pollution Matters ***Tom Johnson***		
Title ***Vice President of Operations***	Telephone Number ***(409)795-0792***	E-mail Address ***tjohnson@meridianenergygroup.inc***

SECTION B – TANK DATA

Legal Description of Facility Site ***Property ID 07 0000 00165 000 in the SE 1/4 of Section 2, Twp 139N, Range 100W and*** ***Property ID: 07 0000 00162 000 in the NW1/4 and SW 1/4 of Section 1, Twp 139N, Range 100W***				
County ***Billings***		Source ID Number ***203-T-0014***		
Capacity	Barrels ***33,312***		Gallons ***1,399,104***	
Dimensions	Diameter ***63'***	Height ***60'***	Length	Width
Shape	☒Cylindrical	☐Spherical	☐Other – Specify:	
Materials of Construction	***Carbon Steel***			
Construction	☐Riveted	☒Welded	☐Other – Specify:	
Color	***Beige***			
Condition	☒Good	☐Fair	☐Poor	
Status	☒New Construction	☐Alteration	☐Existing (Give Date Constructed): _____	
Type of Tank	☒Fixed Roof ☐Variable Vapor Space ☐Pressure (low or high)		☐External Floating ☐ Internal Floating ☐Other – Specify:	
Type of Roof	☐Pan	☐Double Deck	☐Pontoon	☒Other – Specify: ***Cone Roof***
Type of Seal	Metallic Shoe Seal	Liquid Mounted Resilient Seal	Vapor Mounted Resilient Seal	
	☐Primary Seal Only ☐With Rim Mounted Seal ☐With Shoe Mounted Secondary Seal	☐Primary Seal Only ☐With Rim Mounted Seal ☐With Weather Shield	☐Primary Seal Only ☐With Rim Mounted Seal ☐With Weather Shield	

SECTION C – TANK CONTENTS

Undesulphurized Diesel, (TVP 0.004 psia)

SECTION D – VAPOR DISPOSAL

☐Atmosphere	☒Vapor Recovery Unit	☐Flare	☐Other – Specify:

SECTION E – VAPOR PRESSURE DATA

psia	
Maximum True Vapor Pressure ***0.004***	Maximum Reid Vapor Pressure ***-***

SECTION F – OPERATIONAL DATA

Maximum Filling Rate (barrels per hour or gallons per hour) ***TBD***	Vapor Space Outage (See AP-42, 7.1-92, Equation 1-15) ***41.67***
Average Throughput (gallons per day) ***88,208.4***	Tank Turnovers per Year ***27.61***

SECTION G – SOLUTION STORAGE

If material stored is a solution, supply the following information:	
Name of Solvent ***N/A***	Name of Material Dissolved ***N/A***
Concentration of Material Dissolved (% by weight or % by volume or lbs/gal) ***N/A***	

SECTION H – AIR CONTAMINANTS EMITTED

Pollutant*	Maximum Pounds Per Hour	Tons Per Year	Basis and Calculations for Quantities (Attach separate sheet if needed)
2-Methyl naphthalene	***1.2E-05***	***5.1E-05***	***VOC from TANKS 4.0.9d software modeled runs.*** ***HAPs from Table 3-3 of the Emissions Estimation Protocol for Petroleum Refineries*** ***See Document P-5715043-01-001-18042-I001 "EMISSIONS INVENTORY" and P-5715043-01-001-18035-I001 "BACT Analysis"***
Anthracene	***7.9E-07***	***3.5E-06***	
Benzene	***1.8E-04***	***7.8E-04***	
Biphenyl	***0.0E+00***	***0.0E+00***	
Chrysene	***6.9E-07***	***3.0E-06***	
Cresol	***6.3E-07***	***2.7E-06***	
Cumene	***3.3E-05***	***1.4E-04***	
Ethylbenzene	***5.9E-05***	***2.6E-04***	
Fluorene	***1.2E-06***	***5.2E-06***	
Hexane	***1.6E-03***	***6.9E-03***	
Methanol	***1.3E-05***	***5.5E-05***	
Methyl isobutyl ketone	***1.1E-03***	***4.6E-03***	
Methyl tertiary-butyl ether	***0.0E+00***	***0.0E+00***	
Naphthalene	***1.3E-05***	***5.8E-05***	
Phenanthrene	***5.0E-06***	***2.2E-05***	
Phenol	***2.2E-06***	***9.7E-06***	
Pyrene	***1.3E-06***	***5.6E-06***	
Styrene	***0.0E+00***	***0.0E+00***	
Toluene	***3.3E-04***	***1.4E-03***	
Xylene	***2.3E-04***	***1.0E-03***	
VOC	***4.29E-03***	***1.88E-02***	

* Include an estimate of greenhouse gas emissions (CO_2e)

SECTION I – STANDARDS OF PERFORMANCE

Tank subject to:	☐40 CFR 60, Subpart K	☐40 CFR 60, Subpart Ka	☒40 CFR 60, Subpart Kb
Are the standards of performance for new stationary sources; petroleum liquid storage vessels, 40 CFR Part 60, Subparts K, Ka, and Kb being adhered to, where applicable? ☒Yes ☐ No – Explain:			

Signature of Applicant	Date
	09/26/2016

SEND COMPLETED APPLICATION AND ALL ATTACHMENTS TO:

North Dakota Department of Health
Division of Air Quality
918 E Divide Ave., 2nd Floor
Bismarck, ND 58501-1947
(701) 328-5188

PERMIT APPLICATION FOR
VOLATILE ORGANIC COMPOUNDS STORAGE TANK

NORTH DAKOTA DEPARTMENT OF HEALTH
DIVISION OF AIR QUALITY
SFN 8535 (10-13)

SECTION A – FACILITY INFORMATION

Name of Firm or Organization ***Meridian Energy Group – Davis Refinery***		
Applicant´s Name ***Tom Williams***		
Title ***VP of Planning & Permitting***	Telephone Number ***(707) 299-0182***	E-mail Address ***twilliams@meridianenergygroup.inc***
Mailing Address (Street & No.) ***2062 Business Center Drive, Suite 115***		
City ***Irvine***	State ***CA***	ZIP Code ***92612***
Contact Person for Air Pollution Matters ***Tom Johnson***		
Title ***Vice President of Operations***	Telephone Number ***(409)795-0792***	E-mail Address ***tjohnson@meridianenergygroup.inc***

SECTION B – TANK DATA

Legal Description of Facility Site ***Property ID 07 0000 00165 000 in the SE 1/4 of Section 2, Twp 139N, Range 100W and*** ***Property ID: 07 0000 00162 000 in the NW1/4 and SW 1/4 of Section 1, Twp 139N, Range 100W***				
County ***Billings***		Source ID Number ***203-T-0015***		
Capacity	Barrels ***64,996***		Gallons ***2,729,832***	
Dimensions	Diameter ***88'***	Height ***60'***	Length	Width
Shape	☒Cylindrical	☐Spherical	☐Other – Specify:	
Materials of Construction	***Carbon Steel***			
Construction	☐Riveted	☒Welded	☐Other – Specify:	
Color	***Beige***			
Condition	☒Good	☐Fair	☐Poor	
Status	☒New Construction	☐Alteration	☐Existing (Give Date Constructed): _____	
Type of Tank	☒Fixed Roof ☐Variable Vapor Space ☐Pressure (low or high)		☐External Floating ☐ Internal Floating ☐Other – Specify:	
Type of Roof	☐Pan	☐Double Deck	☐Pontoon	☒Other – Specify: ***Cone Roof***
Type of Seal	Metallic Shoe Seal	Liquid Mounted Resilient Seal	Vapor Mounted Resilient Seal	
	☐Primary Seal Only ☐With Rim Mounted Seal ☐With Shoe Mounted Secondary Seal	☐Primary Seal Only ☐With Rim Mounted Seal ☐With Weather Shield	☐Primary Seal Only ☐With Rim Mounted Seal ☐With Weather Shield	

SECTION C – TANK CONTENTS

Desulphurized Diesel, (TVP 0.004 psia)

SECTION D – VAPOR DISPOSAL

☐Atmosphere	☒Vapor Recovery Unit	☐Flare	☐Other – Specify:

SECTION E – VAPOR PRESSURE DATA

psia	
Maximum True Vapor Pressure ***0.004***	Maximum Reid Vapor Pressure ***-***

SECTION F – OPERATIONAL DATA

Maximum Filling Rate (barrels per hour or gallons per hour) ***TBD***	Vapor Space Outage (See AP-42, 7.1-92, Equation 1-15) ***13.67***
Average Throughput (gallons per day) ***351,792***	Tank Turnovers per Year ***56.44***

SECTION G – SOLUTION STORAGE

If material stored is a solution, supply the following information:	
Name of Solvent ***N/A***	Name of Material Dissolved ***N/A***
Concentration of Material Dissolved (% by weight or % by volume or lbs/gal) ***N/A***	

SECTION H – AIR CONTAMINANTS EMITTED

Pollutant*	Maximum Pounds Per Hour	Tons Per Year	Basis and Calculations for Quantities (Attach separate sheet if needed)
2-Methyl naphthalene	***2.3E-05***	***9.9E-05***	***VOC from TANKS 4.0.9d software modeled runs.*** ***HAPs from Table 3-3 of the Emissions Estimation Protocol for Petroleum Refineries*** ***See Document P-5715043-01-001-18042-I001 "EMISSIONS INVENTORY" and P-5715043-01-001-18035-I001 "BACT Analysis"***
Anthracene	***1.5E-06***	***6.8E-06***	
Benzene	***3.5E-04***	***1.5E-03***	
Biphenyl	***0.0E+00***	***0.0E+00***	
Chrysene	***1.4E-06***	***5.9E-06***	
Cresol	***1.2E-06***	***5.4E-06***	
Cumene	***6.4E-05***	***2.8E-04***	
Ethylbenzene	***1.2E-04***	***5.1E-04***	
Fluorene	***2.3E-06***	***1.0E-05***	
Hexane	***3.1E-03***	***1.4E-02***	
Methanol	***2.4E-05***	***1.1E-04***	
Methyl isobutyl ketone	***2.1E-03***	***9.0E-03***	
Methyl tertiary-butyl ether	***0.0E+00***	***0.0E+00***	
Naphthalene	***2.6E-05***	***1.1E-04***	
Phenanthrene	***9.7E-06***	***4.2E-05***	
Phenol	***4.3E-06***	***1.9E-05***	
Pyrene	***2.5E-06***	***1.1E-05***	
Styrene	***0.0E+00***	***0.0E+00***	
Toluene	***6.4E-04***	***2.8E-03***	
Xylene	***4.5E-04***	***2.0E-03***	
VOC	***7.95E-03***	***3.48E-02***	

* Include an estimate of greenhouse gas emissions (CO_2e)

SECTION I – STANDARDS OF PERFORMANCE

Tank subject to:	☐40 CFR 60, Subpart K	☐40 CFR 60, Subpart Ka	☒40 CFR 60, Subpart Kb
Are the standards of performance for new stationary sources; petroleum liquid storage vessels, 40 CFR Part 60, Subparts K, Ka, and Kb being adhered to, where applicable? ☒Yes ☐ No – Explain:			

Signature of Applicant	Date
	09/26/2016

SEND COMPLETED APPLICATION AND ALL ATTACHMENTS TO:

North Dakota Department of Health
Division of Air Quality
918 E Divide Ave., 2nd Floor
Bismarck, ND 58501-1947
(701) 328-5188

PERMIT APPLICATION FOR
VOLATILE ORGANIC COMPOUNDS STORAGE TANK

NORTH DAKOTA DEPARTMENT OF HEALTH
DIVISION OF AIR QUALITY
SFN 8535 (10-13)

SECTION A – FACILITY INFORMATION

Name of Firm or Organization ***Meridian Energy Group – Davis Refinery***		
Applicant´s Name ***Tom Williams***		
Title ***VP of Planning & Permitting***	Telephone Number ***(707) 299-0182***	E-mail Address ***twilliams@meridianenergygroup.inc***
Mailing Address (Street & No.) ***2062 Business Center Drive, Suite 115***		
City ***Irvine***	State ***CA***	ZIP Code ***92612***
Contact Person for Air Pollution Matters ***Tom Johnson***		
Title ***Vice President of Operations***	Telephone Number ***(409)795-0792***	E-mail Address ***tjohnson@meridianenergygroup.inc***

SECTION B – TANK DATA

Legal Description of Facility Site ***Property ID 07 0000 00165 000 in the SE 1/4 of Section 2, Twp 139N, Range 100W and*** ***Property ID: 07 0000 00162 000 in the NW1/4 and SW 1/4 of Section 1, Twp 139N, Range 100W***				
County ***Billings***		Source ID Number ***203-T-0016***		
Capacity	Barrels ***64,996***		Gallons ***2,729,832***	
Dimensions	Diameter ***88'***	Height ***60'***	Length	Width
Shape	☒Cylindrical	☐Spherical	☐Other – Specify:	
Materials of Construction	***Carbon Steel***			
Construction	☐Riveted	☒Welded	☐Other – Specify:	
Color	***Beige***			
Condition	☒Good	☐Fair	☐Poor	
Status	☒New Construction	☐Alteration	☐Existing (Give Date Constructed): _____	
Type of Tank	☒Fixed Roof ☐Variable Vapor Space ☐Pressure (low or high)		☐External Floating ☐ Internal Floating ☐Other – Specify:	
Type of Roof	☐Pan	☐Double Deck	☐Pontoon	☒Other – Specify: ***Cone Roof***
Type of Seal	Metallic Shoe Seal	Liquid Mounted Resilient Seal	Vapor Mounted Resilient Seal	
	☐Primary Seal Only ☐With Rim Mounted Seal ☐With Shoe Mounted Secondary Seal	☐Primary Seal Only ☐With Rim Mounted Seal ☐With Weather Shield	☐Primary Seal Only ☐With Rim Mounted Seal ☐With Weather Shield	

SECTION C – TANK CONTENTS

Desulphurized Diesel, (TVP 0.004 psia)

SECTION D – VAPOR DISPOSAL

☐Atmosphere	☒Vapor Recovery Unit	☐Flare	☐Other – Specify:

SECTION E – VAPOR PRESSURE DATA

psia	
Maximum True Vapor Pressure ***0.004***	Maximum Reid Vapor Pressure ***-***

SECTION F – OPERATIONAL DATA

Maximum Filling Rate (barrels per hour or gallons per hour) ***TBD***	Vapor Space Outage (See AP-42, 7.1-92, Equation 1-15) ***13.67***
Average Throughput (gallons per day) ***351,792***	Tank Turnovers per Year ***56.44***

SECTION G – SOLUTION STORAGE

If material stored is a solution, supply the following information:	
Name of Solvent ***N/A***	Name of Material Dissolved ***N/A***
Concentration of Material Dissolved (% by weight or % by volume or lbs/gal) ***N/A***	

SECTION H – AIR CONTAMINANTS EMITTED

Pollutant*	Maximum Pounds Per Hour	Tons Per Year	Basis and Calculations for Quantities (Attach separate sheet if needed)
2-Methyl naphthalene	***2.3E-05***	***9.9E-05***	***VOC from TANKS 4.0.9d software modeled runs.*** ***HAPs from Table 3-3 of the Emissions Estimation Protocol for Petroleum Refineries*** ***See Document P-5715043-01-001-18042-I001 "EMISSIONS INVENTORY" and P-5715043-01-001-18035-I001 "BACT Analysis"***
Anthracene	***1.5E-06***	***6.8E-06***	
Benzene	***3.5E-04***	***1.5E-03***	
Biphenyl	***0.0E+00***	***0.0E+00***	
Chrysene	***1.4E-06***	***5.9E-06***	
Cresol	***1.2E-06***	***5.4E-06***	
Cumene	***6.4E-05***	***2.8E-04***	
Ethylbenzene	***1.2E-04***	***5.1E-04***	
Fluorene	***2.3E-06***	***1.0E-05***	
Hexane	***3.1E-03***	***1.4E-02***	
Methanol	***2.4E-05***	***1.1E-04***	
Methyl isobutyl ketone	***2.1E-03***	***9.0E-03***	
Methyl tertiary-butyl ether	***0.0E+00***	***0.0E+00***	
Naphthalene	***2.6E-05***	***1.1E-04***	
Phenanthrene	***9.7E-06***	***4.2E-05***	
Phenol	***4.3E-06***	***1.9E-05***	
Pyrene	***2.5E-06***	***1.1E-05***	
Styrene	***0.0E+00***	***0.0E+00***	
Toluene	***6.4E-04***	***2.8E-03***	
Xylene	***4.5E-04***	***2.0E-03***	
VOC	***7.95E-03***	***3.48E-02***	

* Include an estimate of greenhouse gas emissions (CO_2e)

SECTION I – STANDARDS OF PERFORMANCE

Tank subject to:	☐40 CFR 60, Subpart K	☐40 CFR 60, Subpart Ka	☒40 CFR 60, Subpart Kb
Are the standards of performance for new stationary sources; petroleum liquid storage vessels, 40 CFR Part 60, Subparts K, Ka, and Kb being adhered to, where applicable? ☒Yes ☐ No – Explain:			

Signature of Applicant	Date
	09/26/2016

SEND COMPLETED APPLICATION AND ALL ATTACHMENTS TO:

North Dakota Department of Health
Division of Air Quality
918 E Divide Ave., 2nd Floor
Bismarck, ND 58501-1947
(701) 328-5188

PERMIT APPLICATION FOR
VOLATILE ORGANIC COMPOUNDS STORAGE TANK

NORTH DAKOTA DEPARTMENT OF HEALTH
DIVISION OF AIR QUALITY
SFN 8535 (10-13)

SECTION A – FACILITY INFORMATION

Name of Firm or Organization ***Meridian Energy Group – Davis Refinery***		
Applicant´s Name ***Tom Williams***		
Title ***VP of Planning & Permitting***	Telephone Number ***(707) 299-0182***	E-mail Address ***twilliams@meridianenergygroup.inc***
Mailing Address (Street & No.) ***2062 Business Center Drive, Suite 115***		
City ***Irvine***	State ***CA***	ZIP Code ***92612***
Contact Person for Air Pollution Matters ***Tom Johnson***		
Title ***Vice President of Operations***	Telephone Number ***(409)795-0792***	E-mail Address ***tjohnson@meridianenergygroup.inc***

SECTION B – TANK DATA

Legal Description of Facility Site ***Property ID 07 0000 00165 000 in the SE 1/4 of Section 2, Twp 139N, Range 100W and*** ***Property ID: 07 0000 00162 000 in the NW1/4 and SW 1/4 of Section 1, Twp 139N, Range 100W***				
County ***Billings***		Source ID Number ***203-T-0017***		
Capacity	Barrels ***33,312***		Gallons ***1,399,104***	
Dimensions	Diameter ***63'***	Height ***60'***	Length	Width
Shape	☒Cylindrical	☐Spherical	☐Other – Specify:	
Materials of Construction	***Carbon Steel***			
Construction	☐Riveted	☒Welded	☐Other – Specify:	
Color	***Beige***			
Condition	☒Good	☐Fair	☐Poor	
Status	☒New Construction	☐Alteration	☐Existing (Give Date Constructed): _____	
Type of Tank	☒Fixed Roof ☐Variable Vapor Space ☐Pressure (low or high)		☐External Floating ☐ Internal Floating ☐Other – Specify:	
Type of Roof	☐Pan	☐Double Deck	☐Pontoon	☒Other – Specify: ***Cone Roof***
Type of Seal	Metallic Shoe Seal	Liquid Mounted Resilient Seal	Vapor Mounted Resilient Seal	
	☐Primary Seal Only ☐With Rim Mounted Seal ☐With Shoe Mounted Secondary Seal	☐Primary Seal Only ☐With Rim Mounted Seal ☐With Weather Shield	☐Primary Seal Only ☐With Rim Mounted Seal ☐With Weather Shield	

SECTION C – TANK CONTENTS

Vacuum Gasoil, (TVP 0,00002 – 0,00003)

SECTION D – VAPOR DISPOSAL

☒Atmosphere ☐Vapor Recovery Unit ☐Flare ☐Other – Specify:

SECTION E – VAPOR PRESSURE DATA

psia	
Maximum True Vapor Pressure ***0,00002 – 0,00003***	Maximum Reid Vapor Pressure ***-***

SECTION F – OPERATIONAL DATA

Maximum Filling Rate (barrels per hour or gallons per hour) ***TBD***	Vapor Space Outage (See AP-42, 7.1-92, Equation 1-15) ***41.67***
Average Throughput (gallons per day) ***124,740***	Tank Turnovers per Year ***39.05***

SECTION G – SOLUTION STORAGE

If material stored is a solution, supply the following information:	
Name of Solvent ***N/A***	Name of Material Dissolved ***N/A***
Concentration of Material Dissolved (% by weight or % by volume or lbs/gal) ***N/A***	

SECTION H – AIR CONTAMINANTS EMITTED

Pollutant*	Maximum Pounds Per Hour	Tons Per Year	Basis and Calculations for Quantities (Attach separate sheet if needed)
2-Methyl naphthalene	***1.2E-05***	***5.1E-05***	***VOC from TANKS 4.0.9d software modeled runs.*** ***HAPs from Table 3-3 of the Emissions Estimation Protocol for Petroleum Refineries*** ***See Document P-5715043-01-001-18042-I001 "EMISSIONS INVENTORY" and P-5715043-01-001-18035-I001 "BACT Analysis"***
Anthracene	***7.9E-07***	***3.5E-06***	
Benzene	***1.8E-04***	***7.8E-04***	
Biphenyl	***0.0E+00***	***0.0E+00***	
Chrysene	***6.9E-07***	***3.0E-06***	
Cresol	***6.3E-07***	***2.7E-06***	
Cumene	***3.3E-05***	***1.4E-04***	
Ethylbenzene	***5.9E-05***	***2.6E-04***	
Fluorene	***1.2E-06***	***5.2E-06***	
Hexane	***1.6E-03***	***6.9E-03***	
Methanol	***1.3E-05***	***5.5E-05***	
Methyl isobutyl ketone	***1.1E-03***	***4.6E-03***	
Methyl tertiary-butyl ether	***0.0E+00***	***0.0E+00***	
Naphthalene	***1.3E-05***	***5.8E-05***	
Phenanthrene	***5.0E-06***	***2.2E-05***	
Phenol	***2.2E-06***	***9.7E-06***	
Pyrene	***1.3E-06***	***5.6E-06***	
Styrene	***0.0E+00***	***0.0E+00***	
Toluene	***3.3E-04***	***1.4E-03***	
Xylene	***2.3E-04***	***1.0E-03***	
VOC	***1.97E-03***	***8.64E-03***	

* Include an estimate of greenhouse gas emissions (CO_2e)

SECTION I – STANDARDS OF PERFORMANCE

Tank subject to:	☐40 CFR 60, Subpart K	☐40 CFR 60, Subpart Ka	☒40 CFR 60, Subpart Kb
Are the standards of performance for new stationary sources; petroleum liquid storage vessels, 40 CFR Part 60, Subparts K, Ka, and Kb being adhered to, where applicable? ☒Yes ☐ No – Explain:			

Signature of Applicant	Date
Tom Williams	09/26/2016

SEND COMPLETED APPLICATION AND ALL ATTACHMENTS TO:

North Dakota Department of Health
Division of Air Quality
918 E Divide Ave., 2nd Floor
Bismarck, ND 58501-1947
(701) 328-5188

PERMIT APPLICATION FOR
VOLATILE ORGANIC COMPOUNDS STORAGE TANK

NORTH DAKOTA DEPARTMENT OF HEALTH
DIVISION OF AIR QUALITY
SFN 8535 (10-13)

SECTION A – FACILITY INFORMATION

Name of Firm or Organization ***Meridian Energy Group – Davis Refinery***		
Applicant´s Name ***Tom Williams***		
Title ***VP of Planning & Permitting***	Telephone Number ***(707) 299-0182***	E-mail Address ***twilliams@meridianenergygroup.inc***
Mailing Address (Street & No.) ***2062 Business Center Drive, Suite 115***		
City ***Irvine***	State ***CA***	ZIP Code ***92612***
Contact Person for Air Pollution Matters ***Tom Johnson***		
Title ***Vice President of Operations***	Telephone Number ***(409)795-0792***	E-mail Address ***tjohnson@meridianenergygroup.inc***

SECTION B – TANK DATA

Legal Description of Facility Site ***Property ID 07 0000 00165 000 in the SE 1/4 of Section 2, Twp 139N, Range 100W and*** ***Property ID: 07 0000 00162 000 in the NW1/4 and SW 1/4 of Section 1, Twp 139N, Range 100W***				
County ***Billings***		Source ID Number ***203-T-0018***		
Capacity	Barrels ***33,312***		Gallons ***1,399,104***	
Dimensions	Diameter ***63'***	Height ***60'***	Length	Width
Shape	☒Cylindrical	☐Spherical	☐Other – Specify:	
Materials of Construction	***Carbon Steel***			
Construction	☐Riveted	☒Welded	☐Other – Specify:	
Color	***Beige***			
Condition	☒Good	☐Fair	☐Poor	
Status	☒New Construction	☐Alteration	☐Existing (Give Date Constructed): _____	
Type of Tank	☐Fixed Roof ☐Variable Vapor Space ☐Pressure (low or high)		☐External Floating ☒ Internal Floating ☐Other – Specify:	
Type of Roof	☐Pan	☒Double Deck	☐Pontoon	☐Other – Specify:
Type of Seal	Metallic Shoe Seal	Liquid Mounted Resilient Seal	Vapor Mounted Resilient Seal	
	☐Primary Seal Only ☐With Rim Mounted Seal ☐With Shoe Mounted Secondary Seal	☐Primary Seal Only ☐With Rim Mounted Seal ☐With Weather Shield	☐Primary Seal Only ☒With Rim Mounted Seal ☐With Weather Shield	

SECTION C – TANK CONTENTS

FCC Naphtha, (RVP 15 psia)

SECTION D – VAPOR DISPOSAL

☒Atmosphere ☐Vapor Recovery Unit ☐Flare ☐Other – Specify:

SECTION E – VAPOR PRESSURE DATA

psia	
Maximum True Vapor Pressure **-**	Maximum Reid Vapor Pressure ***15***

SECTION F – OPERATIONAL DATA

Maximum Filling Rate (barrels per hour or gallons per hour) ***TBD***	Vapor Space Outage (See AP-42, 7.1-92, Equation 1-15) ***N/A***
Average Throughput (gallons per day) ***181,146***	Tank Turnovers per Year ***26.78***

SECTION G – SOLUTION STORAGE

If material stored is a solution, supply the following information:	
Name of Solvent ***N/A***	Name of Material Dissolved ***N/A***
Concentration of Material Dissolved (% by weight or % by volume or lbs/gal) ***N/A***	

SECTION H – AIR CONTAMINANTS EMITTED

Pollutant*	Maximum Pounds Per Hour	Tons Per Year	Basis and Calculations for Quantities (Attach separate sheet if needed)
2-Methyl naphthalene	***1.2E-04***	***5.3E-04***	***VOC from TANKS 4.0.9d software modeled runs.*** ***HAPs from Table 3-3 of the Emissions Estimation Protocol for Petroleum Refineries*** ***See Document P-5715043-01-001-18042-I001 "EMISSIONS INVENTORY" and P-5715043-01-001-18035-I001 "BACT Analysis"***
Anthracene	***8.3E-06***	***3.6E-05***	
Benzene	***2.4E-03***	***1.1E-02***	
Biphenyl	***5.9E-06***	***2.6E-05***	
Chrysene	***7.3E-06***	***3.2E-05***	
Cresol	***4.5E-04***	***2.0E-03***	
Cumene	***5.2E-04***	***2.3E-03***	
Ethylbenzene	***1.1E-03***	***4.7E-03***	
Fluorene	***1.2E-05***	***5.5E-05***	
Hexane	***1.5E-02***	***6.4E-02***	
Methanol	***1.3E-04***	***5.8E-04***	
Methyl isobutyl ketone	***1.1E-02***	***4.9E-02***	
Methyl tertiary-butyl ether	***1.1E-02***	***4.7E-02***	
Naphthalene	***2.6E-04***	***1.2E-03***	
Phenanthrene	***5.2E-05***	***2.3E-04***	
Phenol	***3.1E-05***	***1.4E-04***	
Pyrene	***1.4E-05***	***5.9E-05***	
Styrene	***2.3E-03***	***1.0E-02***	
Toluene	***6.2E-03***	***2.7E-02***	
Xylene	***4.8E-03***	***2.1E-02***	
VOC	***9.60E-02***	***4.20E-01***	

* Include an estimate of greenhouse gas emissions (CO_2e)

SECTION I – STANDARDS OF PERFORMANCE

Tank subject to:	☐40 CFR 60, Subpart K	☐40 CFR 60, Subpart Ka	☒40 CFR 60, Subpart Kb
Are the standards of performance for new stationary sources; petroleum liquid storage vessels, 40 CFR Part 60, Subparts K, Ka, and Kb being adhered to, where applicable? ☒Yes ☐ No – Explain:			

Signature of Applicant	Date
	09/26/2016

SEND COMPLETED APPLICATION AND ALL ATTACHMENTS TO:

North Dakota Department of Health
Division of Air Quality
918 E Divide Ave., 2nd Floor
Bismarck, ND 58501-1947
(701) 328-5188

PERMIT APPLICATION FOR
VOLATILE ORGANIC COMPOUNDS STORAGE TANK

NORTH DAKOTA DEPARTMENT OF HEALTH
DIVISION OF AIR QUALITY
SFN 8535 (10-13)

SECTION A – FACILITY INFORMATION

Name of Firm or Organization ***Meridian Energy Group – Davis Refinery***		
Applicant´s Name ***Tom Williams***		
Title ***VP of Planning & Permitting***	Telephone Number ***(707) 299-0182***	E-mail Address ***twilliams@meridianenergygroup.inc***
Mailing Address (Street & No.) ***2062 Business Center Drive, Suite 115***		
City ***Irvine***	State ***CA***	ZIP Code ***92612***
Contact Person for Air Pollution Matters ***Tom Johnson***		
Title ***Vice President of Operations***	Telephone Number ***(409)795-0792***	E-mail Address ***tjohnson@meridianenergygroup.inc***

SECTION B – TANK DATA

Legal Description of Facility Site ***Property ID 07 0000 00165 000 in the SE 1/4 of Section 2, Twp 139N, Range 100W and*** ***Property ID: 07 0000 00162 000 in the NW1/4 and SW 1/4 of Section 1, Twp 139N, Range 100W***				
County ***Billings***		Source ID Number ***203-T-0019***		
Capacity	Barrels ***33,312***		Gallons ***1,399,104***	
Dimensions	Diameter ***63'***	Height ***60'***	Length	Width
Shape	☒Cylindrical	☐Spherical	☐Other – Specify:	
Materials of Construction	***Carbon Steel***			
Construction	☐Riveted	☒Welded	☐Other – Specify:	
Color	***Beige***			
Condition	☒Good	☐Fair	☐Poor	
Status	☒New Construction	☐Alteration	☐Existing (Give Date Constructed): _____	
Type of Tank	☐Fixed Roof ☐Variable Vapor Space ☐Pressure (low or high)		☐External Floating ☒ Internal Floating ☐Other – Specify:	
Type of Roof	☐Pan	☒Double Deck	☐Pontoon	☐Other – Specify:
Type of Seal	Metallic Shoe Seal	Liquid Mounted Resilient Seal	Vapor Mounted Resilient Seal	
	☐Primary Seal Only ☐With Rim Mounted Seal ☐With Shoe Mounted Secondary Seal	☐Primary Seal Only ☐With Rim Mounted Seal ☐With Weather Shield	☐Primary Seal Only ☒With Rim Mounted Seal ☐With Weather Shield	

SECTION C – TANK CONTENTS

FCC Naphtha, (RVP 15 psia)

SECTION D – VAPOR DISPOSAL

☒Atmosphere ☐Vapor Recovery Unit ☐Flare ☐Other – Specify:

SECTION E – VAPOR PRESSURE DATA

psia	
Maximum True Vapor Pressure **-**	Maximum Reid Vapor Pressure ***15***

SECTION F – OPERATIONAL DATA

Maximum Filling Rate (barrels per hour or gallons per hour) ***TBD***	Vapor Space Outage (See AP-42, 7.1-92, Equation 1-15) ***N/A***
Average Throughput (gallons per day) ***181,146***	Tank Turnovers per Year ***26.78***

SECTION G – SOLUTION STORAGE

If material stored is a solution, supply the following information:	
Name of Solvent ***N/A***	Name of Material Dissolved ***N/A***
Concentration of Material Dissolved (% by weight or % by volume or lbs/gal) ***N/A***	

SECTION H – AIR CONTAMINANTS EMITTED

Pollutant*	Maximum Pounds Per Hour	Tons Per Year	Basis and Calculations for Quantities (Attach separate sheet if needed)
2-Methyl naphthalene	***1.2E-04***	***5.3E-04***	***VOC from TANKS 4.0.9d software modeled runs.*** ***HAPs from Table 3-3 of the Emissions Estimation Protocol for Petroleum Refineries*** ***See Document P-5715043-01-001-18042-I001 "EMISSIONS INVENTORY" and P-5715043-01-001-18035-I001 "BACT Analysis"***
Anthracene	***8.3E-06***	***3.6E-05***	
Benzene	***2.4E-03***	***1.1E-02***	
Biphenyl	***5.9E-06***	***2.6E-05***	
Chrysene	***7.3E-06***	***3.2E-05***	
Cresol	***4.5E-04***	***2.0E-03***	
Cumene	***5.2E-04***	***2.3E-03***	
Ethylbenzene	***1.1E-03***	***4.7E-03***	
Fluorene	***1.2E-05***	***5.5E-05***	
Hexane	***1.5E-02***	***6.4E-02***	
Methanol	***1.3E-04***	***5.8E-04***	
Methyl isobutyl ketone	***1.1E-02***	***4.9E-02***	
Methyl tertiary-butyl ether	***1.1E-02***	***4.7E-02***	
Naphthalene	***2.6E-04***	***1.2E-03***	
Phenanthrene	***5.2E-05***	***2.3E-04***	
Phenol	***3.1E-05***	***1.4E-04***	
Pyrene	***1.4E-05***	***5.9E-05***	
Styrene	***2.3E-03***	***1.0E-02***	
Toluene	***6.2E-03***	***2.7E-02***	
Xylene	***4.8E-03***	***2.1E-02***	
VOC	***9.60E-02***	***4.20E-01***	

* Include an estimate of greenhouse gas emissions (CO_2e)

SECTION I – STANDARDS OF PERFORMANCE

Tank subject to:	☐40 CFR 60, Subpart K	☐40 CFR 60, Subpart Ka	☒40 CFR 60, Subpart Kb
Are the standards of performance for new stationary sources; petroleum liquid storage vessels, 40 CFR Part 60, Subparts K, Ka, and Kb being adhered to, where applicable? ☒Yes ☐ No – Explain:			

Signature of Applicant	Date
Tom Williams	09/26/2016

SEND COMPLETED APPLICATION AND ALL ATTACHMENTS TO:

North Dakota Department of Health
Division of Air Quality
918 E Divide Ave., 2nd Floor
Bismarck, ND 58501-1947
(701) 328-5188

PERMIT APPLICATION FOR
VOLATILE ORGANIC COMPOUNDS STORAGE TANK

NORTH DAKOTA DEPARTMENT OF HEALTH
DIVISION OF AIR QUALITY
SFN 8535 (10-13)

SECTION A – FACILITY INFORMATION

Name of Firm or Organization ***Meridian Energy Group – Davis Refinery***		
Applicant´s Name ***Tom Williams***		
Title ***VP of Planning & Permitting***	Telephone Number ***(707) 299-0182***	E-mail Address ***twilliams@meridianenergygroup.inc***
Mailing Address (Street & No.) ***2062 Business Center Drive, Suite 115***		
City ***Irvine***	State ***CA***	ZIP Code ***92612***
Contact Person for Air Pollution Matters ***Tom Johnson***		
Title ***Vice President of Operations***	Telephone Number ***(409)795-0792***	E-mail Address ***tjohnson@meridianenergygroup.inc***

SECTION B – TANK DATA

Legal Description of Facility Site ***Property ID 07 0000 00165 000 in the SE 1/4 of Section 2, Twp 139N, Range 100W and*** ***Property ID: 07 0000 00162 000 in the NW1/4 and SW 1/4 of Section 1, Twp 139N, Range 100W***				
County ***Billings***		Source ID Number ***203-T-0020***		
Capacity	Barrels ***33,312***		Gallons ***1,399,104***	
Dimensions	Diameter ***63'***	Height ***60'***	Length	Width
Shape	☒Cylindrical	☐Spherical	☐Other – Specify:	
Materials of Construction	***Carbon Steel***			
Construction	☐Riveted	☒Welded	☐Other – Specify:	
Color	***Beige***			
Condition	☒Good	☐Fair	☐Poor	
Status	☒New Construction	☐Alteration	☐Existing (Give Date Constructed): _____	
Type of Tank	☐Fixed Roof ☐Variable Vapor Space ☐Pressure (low or high)		☐External Floating ☒ Internal Floating ☐Other – Specify:	
Type of Roof	☐Pan	☒Double Deck	☐Pontoon	☐Other – Specify:
Type of Seal	Metallic Shoe Seal	Liquid Mounted Resilient Seal	Vapor Mounted Resilient Seal	
	☐Primary Seal Only ☐With Rim Mounted Seal ☐With Shoe Mounted Secondary Seal	☐Primary Seal Only ☐With Rim Mounted Seal ☐With Weather Shield	☐Primary Seal Only ☒With Rim Mounted Seal ☐With Weather Shield	

SECTION C – TANK CONTENTS

Alkylate, (RVP 4 psia)

SECTION D – VAPOR DISPOSAL

☒Atmosphere	☐Vapor Recovery Unit	☐Flare	☐Other – Specify:

SECTION E – VAPOR PRESSURE DATA

psia	
Maximum True Vapor Pressure ***-***	Maximum Reid Vapor Pressure ***4***

SECTION F – OPERATIONAL DATA

Maximum Filling Rate (barrels per hour or gallons per hour) ***TBD***	Vapor Space Outage (See AP-42, 7.1-92, Equation 1-15) ***N/A***
Average Throughput (gallons per day) ***102,648***	Tank Turnovers per Year ***26.78***

SECTION G – SOLUTION STORAGE

If material stored is a solution, supply the following information:	
Name of Solvent ***N/A***	Name of Material Dissolved ***N/A***
Concentration of Material Dissolved (% by weight or % by volume or lbs/gal) ***N/A***	

SECTION H – AIR CONTAMINANTS EMITTED

Pollutant*	Maximum Pounds Per Hour	Tons Per Year	Basis and Calculations for Quantities (Attach separate sheet if needed)
2-Methyl naphthalene	***1,2E-04***	***5,3E-04***	***VOC from TANKS 4.0.9d software modeled runs.*** ***HAPs from Table 3-3 of the Emissions Estimation Protocol for Petroleum Refineries*** ***See Document P-5715043-01-001-18042-I001 "EMISSIONS INVENTORY" and P-5715043-01-001-18035-I001 "BACT Analysis"***
Anthracene	***8,3E-06***	***3,6E-05***	
Benzene	***2,4E-03***	***1,1E-02***	
Biphenyl	***5,9E-06***	***2,6E-05***	
Chrysene	***7,3E-06***	***3,2E-05***	
Cresol	***4,5E-04***	***2,0E-03***	
Cumene	***5,2E-04***	***2,3E-03***	
Ethylbenzene	***1,1E-03***	***4,7E-03***	
Fluorene	***1,2E-05***	***5,5E-05***	
Hexane	***1,5E-02***	***6,4E-02***	
Methanol	***1,3E-04***	***5,8E-04***	
Methyl isobutyl ketone	***1,1E-02***	***4,9E-02***	
Methyl tertiary-butyl ether	***1,1E-02***	***4,7E-02***	
Naphthalene	***2,6E-04***	***1,2E-03***	
Phenanthrene	***5,2E-05***	***2,3E-04***	
Phenol	***3,1E-05***	***1,4E-04***	
Pyrene	***1,4E-05***	***5,9E-05***	
Styrene	***2,3E-03***	***1,0E-02***	
Toluene	***6,2E-03***	***2,7E-02***	
Xylene	***4,8E-03***	***2,1E-02***	
VOC	***6.27E-02***	***2.74E-01***	

* Include an estimate of greenhouse gas emissions (CO_2e)

SECTION I – STANDARDS OF PERFORMANCE

Tank subject to:	☐40 CFR 60, Subpart K	☐40 CFR 60, Subpart Ka	☒40 CFR 60, Subpart Kb
Are the standards of performance for new stationary sources; petroleum liquid storage vessels, 40 CFR Part 60, Subparts K, Ka, and Kb being adhered to, where applicable? ☒Yes ☐ No – Explain:			

Signature of Applicant	Date
	09/26/2016

SEND COMPLETED APPLICATION AND ALL ATTACHMENTS TO:

North Dakota Department of Health
Division of Air Quality
918 E Divide Ave., 2nd Floor
Bismarck, ND 58501-1947
(701) 328-5188

PERMIT APPLICATION FOR
VOLATILE ORGANIC COMPOUNDS STORAGE TANK

NORTH DAKOTA DEPARTMENT OF HEALTH
DIVISION OF AIR QUALITY
SFN 8535 (10-13)

SECTION A – FACILITY INFORMATION

Name of Firm or Organization ***Meridian Energy Group – Davis Refinery***		
Applicant´s Name ***Tom Williams***		
Title ***VP of Planning & Permitting***	Telephone Number ***(707) 299-0182***	E-mail Address ***twilliams@meridianenergygroup.inc***
Mailing Address (Street & No.) ***2062 Business Center Drive, Suite 115***		
City ***Irvine***	State ***CA***	ZIP Code ***92612***
Contact Person for Air Pollution Matters ***Tom Johnson***		
Title ***Vice President of Operations***	Telephone Number ***(409)795-0792***	E-mail Address ***tjohnson@meridianenergygroup.inc***

SECTION B – TANK DATA

Legal Description of Facility Site ***Property ID 07 0000 00165 000 in the SE 1/4 of Section 2, Twp 139N, Range 100W and*** ***Property ID: 07 0000 00162 000 in the NW1/4 and SW 1/4 of Section 1, Twp 139N, Range 100W***				
County ***Billings***		Source ID Number ***203-T-0021***		
Capacity	Barrels ***33,312***		Gallons ***1,399,104***	
Dimensions	Diameter ***63'***	Height ***60'***	Length	Width
Shape	☒Cylindrical	☐Spherical	☐Other – Specify:	
Materials of Construction	***Carbon Steel***			
Construction	☐Riveted	☒Welded	☐Other – Specify:	
Color	***Beige***			
Condition	☒Good	☐Fair	☐Poor	
Status	☒New Construction	☐Alteration	☐Existing (Give Date Constructed): _____	
Type of Tank	☐Fixed Roof ☐Variable Vapor Space ☐Pressure (low or high)		☐External Floating ☒ Internal Floating ☐Other – Specify:	
Type of Roof	☐Pan	☒Double Deck	☐Pontoon	☐Other – Specify:
Type of Seal	Metallic Shoe Seal	Liquid Mounted Resilient Seal	Vapor Mounted Resilient Seal	
	☐Primary Seal Only ☐With Rim Mounted Seal ☐With Shoe Mounted Secondary Seal	☐Primary Seal Only ☐With Rim Mounted Seal ☐With Weather Shield	☐Primary Seal Only ☒With Rim Mounted Seal ☐With Weather Shield	

SECTION C – TANK CONTENTS

Alkylate, (RVP 4 psia)

SECTION D – VAPOR DISPOSAL

☒Atmosphere	☐Vapor Recovery Unit	☐Flare	☐Other – Specify:

SECTION E – VAPOR PRESSURE DATA

psia	
Maximum True Vapor Pressure **-**	Maximum Reid Vapor Pressure ***4***

SECTION F – OPERATIONAL DATA

Maximum Filling Rate (barrels per hour or gallons per hour) ***TBD***	Vapor Space Outage (See AP-42, 7.1-92, Equation 1-15) ***N/A***
Average Throughput (gallons per day) ***102,648***	Tank Turnovers per Year ***26.78***

SECTION G – SOLUTION STORAGE

If material stored is a solution, supply the following information:	
Name of Solvent ***N/A***	Name of Material Dissolved ***N/A***
Concentration of Material Dissolved (% by weight or % by volume or lbs/gal) ***N/A***	

SECTION H – AIR CONTAMINANTS EMITTED

Pollutant*	Maximum Pounds Per Hour	Tons Per Year	Basis and Calculations for Quantities (Attach separate sheet if needed)
2-Methyl naphthalene	***1,2E-04***	***5,3E-04***	***VOC from TANKS 4.0.9d software modeled runs.*** ***HAPs from Table 3-3 of the Emissions Estimation Protocol for Petroleum Refineries*** ***See Document P-5715043-01-001-18042-I001 "EMISSIONS INVENTORY" and P-5715043-01-001-18035-I001 "BACT Analysis"***
Anthracene	***8,3E-06***	***3,6E-05***	
Benzene	***2,4E-03***	***1,1E-02***	
Biphenyl	***5,9E-06***	***2,6E-05***	
Chrysene	***7,3E-06***	***3,2E-05***	
Cresol	***4,5E-04***	***2,0E-03***	
Cumene	***5,2E-04***	***2,3E-03***	
Ethylbenzene	***1,1E-03***	***4,7E-03***	
Fluorene	***1,2E-05***	***5,5E-05***	
Hexane	***1,5E-02***	***6,4E-02***	
Methanol	***1,3E-04***	***5,8E-04***	
Methyl isobutyl ketone	***1,1E-02***	***4,9E-02***	
Methyl tertiary-butyl ether	***1,1E-02***	***4,7E-02***	
Naphthalene	***2,6E-04***	***1,2E-03***	
Phenanthrene	***5,2E-05***	***2,3E-04***	
Phenol	***3,1E-05***	***1,4E-04***	
Pyrene	***1,4E-05***	***5,9E-05***	
Styrene	***2,3E-03***	***1,0E-02***	
Toluene	***6,2E-03***	***2,7E-02***	
Xylene	***4,8E-03***	***2,1E-02***	
VOC	***6.27E-02***	***2.74E-01***	

* Include an estimate of greenhouse gas emissions (CO_2e)

SECTION I – STANDARDS OF PERFORMANCE

Tank subject to:	☐40 CFR 60, Subpart K	☐40 CFR 60, Subpart Ka	☒40 CFR 60, Subpart Kb
Are the standards of performance for new stationary sources; petroleum liquid storage vessels, 40 CFR Part 60, Subparts K, Ka, and Kb being adhered to, where applicable? ☒Yes ☐ No – Explain:			

Signature of Applicant	Date
	09/26/2016

SEND COMPLETED APPLICATION AND ALL ATTACHMENTS TO:

North Dakota Department of Health
Division of Air Quality
918 E Divide Ave., 2nd Floor
Bismarck, ND 58501-1947
(701) 328-5188

PERMIT APPLICATION FOR
VOLATILE ORGANIC COMPOUNDS STORAGE TANK

NORTH DAKOTA DEPARTMENT OF HEALTH
DIVISION OF AIR QUALITY
SFN 8535 (10-13)

SECTION A – FACILITY INFORMATION

Name of Firm or Organization ***Meridian Energy Group – Davis Refinery***		
Applicant´s Name ***Tom Williams***		
Title ***VP of Planning & Permitting***	Telephone Number ***(707) 299-0182***	E-mail Address ***twilliams@meridianenergygroup.inc***
Mailing Address (Street & No.) ***2062 Business Center Drive, Suite 115***		
City ***Irvine***	State ***CA***	ZIP Code ***92612***
Contact Person for Air Pollution Matters ***Tom Johnson***		
Title ***Vice President of Operations***	Telephone Number ***(409)795-0792***	E-mail Address ***tjohnson@meridianenergygroup.inc***

SECTION B – TANK DATA

Legal Description of Facility Site ***Property ID 07 0000 00165 000 in the SE 1/4 of Section 2, Twp 139N, Range 100W and*** ***Property ID: 07 0000 00162 000 in the NW1/4 and SW 1/4 of Section 1, Twp 139N, Range 100W***				
County ***Billings***		Source ID Number ***203-T-0022***		
Capacity	Barrels ***33,312***		Gallons ***1,399,104***	
Dimensions	Diameter ***63'***	Height ***60'***	Length	Width
Shape	☒Cylindrical	☐Spherical	☐Other – Specify:	
Materials of Construction	***Carbon Steel***			
Construction	☐Riveted	☒Welded	☐Other – Specify:	
Color	***Beige***			
Condition	☒Good	☐Fair	☐Poor	
Status	☒New Construction	☐Alteration	☐Existing (Give Date Constructed): _____	
Type of Tank	☒Fixed Roof ☐Variable Vapor Space ☐Pressure (low or high)		☐External Floating ☐ Internal Floating ☐Other – Specify:	
Type of Roof	☐Pan	☐Double Deck	☐Pontoon	☒Other – Specify: ***Cone Roof***
Type of Seal	Metallic Shoe Seal	Liquid Mounted Resilient Seal	Vapor Mounted Resilient Seal	
	☐Primary Seal Only ☐With Rim Mounted Seal ☐With Shoe Mounted Secondary Seal	☐Primary Seal Only ☐With Rim Mounted Seal ☐With Weather Shield	☐Primary Seal Only ☐With Rim Mounted Seal ☐With Weather Shield	

SECTION C – TANK CONTENTS

Diluent, (TVP 0.004 psia)

SECTION D – VAPOR DISPOSAL

☒Atmosphere	☐Vapor Recovery Unit	☐Flare	☐Other – Specify:

SECTION E – VAPOR PRESSURE DATA

psia	
Maximum True Vapor Pressure ***0.004***	Maximum Reid Vapor Pressure ***-***

SECTION F – OPERATIONAL DATA

Maximum Filling Rate (barrels per hour or gallons per hour) ***TBD***	Vapor Space Outage (See AP-42, 7.1-92, Equation 1-15) ***41.67***
Average Throughput (gallons per day) ***39,564***	Tank Turnovers per Year ***0.01***

SECTION G – SOLUTION STORAGE

If material stored is a solution, supply the following information:	
Name of Solvent ***N/A***	Name of Material Dissolved ***N/A***
Concentration of Material Dissolved (% by weight or % by volume or lbs/gal) ***N/A***	

SECTION H – AIR CONTAMINANTS EMITTED

Pollutant*	Maximum Pounds Per Hour	Tons Per Year	Basis and Calculations for Quantities (Attach separate sheet if needed)
2-Methyl naphthalene	***1.2E-05***	***5.1E-05***	***VOC from TANKS 4.0.9d software modeled runs.*** ***HAPs from Table 3-3 of the Emissions Estimation Protocol for Petroleum Refineries*** ***See Document P-5715043-01-001-18042-I001 "EMISSIONS INVENTORY" and P-5715043-01-001-18035-I001 "BACT Analysis"***
Anthracene	***7.9E-07***	***3.5E-06***	
Benzene	***1.8E-04***	***7.8E-04***	
Biphenyl	***0.0E+00***	***0.0E+00***	
Chrysene	***6.9E-07***	***3.0E-06***	
Cresol	***6.3E-07***	***2.7E-06***	
Cumene	***3.3E-05***	***1.4E-04***	
Ethylbenzene	***5.9E-05***	***2.6E-04***	
Fluorene	***1.2E-06***	***5.2E-06***	
Hexane	***1.6E-03***	***6.9E-03***	
Methanol	***1.3E-05***	***5.5E-05***	
Methyl isobutyl ketone	***1.1E-03***	***4.6E-03***	
Methyl tertiary-butyl ether	***0.0E+00***	***0.0E+00***	
Naphthalene	***1.3E-05***	***5.8E-05***	
Phenanthrene	***5.0E-06***	***2.2E-05***	
Phenol	***2.2E-06***	***9.7E-06***	
Pyrene	***1.3E-06***	***5.6E-06***	
Styrene	***0.0E+00***	***0.0E+00***	
Toluene	***3.3E-04***	***1.4E-03***	
Xylene	***2.3E-04***	***1.0E-03***	
VOC	***3.73E-02***	***1.63E-01***	

* Include an estimate of greenhouse gas emissions (CO_2e)

SECTION I – STANDARDS OF PERFORMANCE

Tank subject to:	☐40 CFR 60, Subpart K	☐40 CFR 60, Subpart Ka	☒40 CFR 60, Subpart Kb
Are the standards of performance for new stationary sources; petroleum liquid storage vessels, 40 CFR Part 60, Subparts K, Ka, and Kb being adhered to, where applicable? ☒Yes ☐ No – Explain:			

Signature of Applicant	Date
	09/26/2016

SEND COMPLETED APPLICATION AND ALL ATTACHMENTS TO:

North Dakota Department of Health
Division of Air Quality
918 E Divide Ave., 2nd Floor
Bismarck, ND 58501-1947
(701) 328-5188

PERMIT APPLICATION FOR
VOLATILE ORGANIC COMPOUNDS STORAGE TANK

NORTH DAKOTA DEPARTMENT OF HEALTH
DIVISION OF AIR QUALITY
SFN 8535 (10-13)

SECTION A – FACILITY INFORMATION

Name of Firm or Organization ***Meridian Energy Group – Davis Refinery***		
Applicant´s Name ***Tom Williams***		
Title ***VP of Planning & Permitting***	Telephone Number ***(707) 299-0182***	E-mail Address ***twilliams@meridianenergygroup.inc***
Mailing Address (Street & No.) ***2062 Business Center Drive, Suite 115***		
City ***Irvine***	State ***CA***	ZIP Code ***92612***
Contact Person for Air Pollution Matters ***Tom Johnson***		
Title ***Vice President of Operations***	Telephone Number ***(409)795-0792***	E-mail Address ***tjohnson@meridianenergygroup.inc***

SECTION B – TANK DATA

Legal Description of Facility Site ***Property ID 07 0000 00165 000 in the SE 1/4 of Section 2, Twp 139N, Range 100W and*** ***Property ID: 07 0000 00162 000 in the NW1/4 and SW 1/4 of Section 1, Twp 139N, Range 100W***				
County ***Billings***		Source ID Number ***203-T-0023***		
Capacity	Barrels ***64,996***		Gallons ***2,729,832***	
Dimensions	Diameter ***88'***	Height ***60'***	Length	Width
Shape	☒Cylindrical	☐Spherical	☐Other – Specify:	
Materials of Construction	***Carbon Steel***			
Construction	☐Riveted	☒Welded	☐Other – Specify:	
Color	***Beige***			
Condition	☒Good	☐Fair	☐Poor	
Status	☒New Construction	☐Alteration	☐Existing (Give Date Constructed): _____	
Type of Tank	☒Fixed Roof ☐Variable Vapor Space ☐Pressure (low or high)		☐External Floating ☐ Internal Floating ☐Other – Specify:	
Type of Roof	☐Pan	☐Double Deck	☐Pontoon	☒Other – Specify: ***Cone Roof***
Type of Seal	Metallic Shoe Seal	Liquid Mounted Resilient Seal	Vapor Mounted Resilient Seal	
	☐Primary Seal Only ☐With Rim Mounted Seal ☐With Shoe Mounted Secondary Seal	☐Primary Seal Only ☐With Rim Mounted Seal ☐With Weather Shield	☐Primary Seal Only ☐With Rim Mounted Seal ☐With Weather Shield	

SECTION C – TANK CONTENTS

Fuel Oil, (TVP 0.000028 psia)

SECTION D – VAPOR DISPOSAL

☒Atmosphere	☐Vapor Recovery Unit	☐Flare	☐Other – Specify:

SECTION E – VAPOR PRESSURE DATA

psia	
Maximum True Vapor Pressure ***0.000028***	Maximum Reid Vapor Pressure ***-***

SECTION F – OPERATIONAL DATA

Maximum Filling Rate (barrels per hour or gallons per hour) ***TBD***	Vapor Space Outage (See AP-42, 7.1-92, Equation 1-15) ***14***
Average Throughput (gallons per day) ***131,880***	Tank Turnovers per Year ***21.16***

SECTION G – SOLUTION STORAGE

If material stored is a solution, supply the following information:	
Name of Solvent ***N/A***	Name of Material Dissolved ***N/A***
Concentration of Material Dissolved (% by weight or % by volume or lbs/gal) ***N/A***	

SECTION H – AIR CONTAMINANTS EMITTED

Pollutant*	Maximum Pounds Per Hour	Tons Per Year	Basis and Calculations for Quantities (Attach separate sheet if needed)
2-Methyl naphthalene	***2.3E-05***	***9.9E-05***	***VOC from TANKS 4.0.9d software modeled runs.*** ***HAPs from Table 3-3 of the Emissions Estimation Protocol for Petroleum Refineries*** ***See Document P-5715043-01-001-18042-I001 "EMISSIONS INVENTORY" and P-5715043-01-001-18035-I001 "BACT Analysis"***
Anthracene	***1.5E-06***	***6.8E-06***	
Benzene	***3.5E-04***	***1.5E-03***	
Biphenyl	***0.0E+00***	***0.0E+00***	
Chrysene	***1.4E-06***	***5.9E-06***	
Cresol	***1.2E-06***	***5.4E-06***	
Cumene	***6.4E-05***	***2.8E-04***	
Ethylbenzene	***1.2E-04***	***5.1E-04***	
Fluorene	***2.3E-06***	***1.0E-05***	
Hexane	***3.1E-03***	***1.4E-02***	
Methanol	***2.4E-05***	***1.1E-04***	
Methyl isobutyl ketone	***2.1E-03***	***9.0E-03***	
Methyl tertiary-butyl ether	***0.0E+00***	***0.0E+00***	
Naphthalene	***2.6E-05***	***1.1E-04***	
Phenanthrene	***9.7E-06***	***4.2E-05***	
Phenol	***4.3E-06***	***1.9E-05***	
Pyrene	***2.5E-06***	***1.1E-05***	
Styrene	***0.0E+00***	***0.0E+00***	
Toluene	***6.4E-04***	***2.8E-03***	
Xylene	***4.5E-04***	***2.0E-03***	
VOC	***9.42E-04***	***4.13E-03***	

* Include an estimate of greenhouse gas emissions (CO_2e)

SECTION I – STANDARDS OF PERFORMANCE

Tank subject to:	☐40 CFR 60, Subpart K	☐40 CFR 60, Subpart Ka	☒40 CFR 60, Subpart Kb
Are the standards of performance for new stationary sources; petroleum liquid storage vessels, 40 CFR Part 60, Subparts K, Ka, and Kb being adhered to, where applicable? ☒Yes ☐ No – Explain:			

Signature of Applicant	Date
Jon Wilkins	09/26/2016

SEND COMPLETED APPLICATION AND ALL ATTACHMENTS TO:

North Dakota Department of Health
Division of Air Quality
918 E Divide Ave., 2nd Floor
Bismarck, ND 58501-1947
(701) 328-5188

PERMIT APPLICATION FOR
VOLATILE ORGANIC COMPOUNDS STORAGE TANK

NORTH DAKOTA DEPARTMENT OF HEALTH
DIVISION OF AIR QUALITY
SFN 8535 (10-13)

SECTION A – FACILITY INFORMATION

Name of Firm or Organization ***Meridian Energy Group – Davis Refinery***		
Applicant´s Name ***Tom Williams***		
Title ***VP of Planning & Permitting***	Telephone Number ***(707) 299-0182***	E-mail Address ***twilliams@meridianenergygroup.inc***
Mailing Address (Street & No.) ***2062 Business Center Drive, Suite 115***		
City ***Irvine***	State ***CA***	ZIP Code ***92612***
Contact Person for Air Pollution Matters ***Tom Johnson***		
Title ***Vice President of Operations***	Telephone Number ***(409)795-0792***	E-mail Address ***tjohnson@meridianenergygroup.inc***

SECTION B – TANK DATA

Legal Description of Facility Site ***Property ID 07 0000 00165 000 in the SE 1/4 of Section 2, Twp 139N, Range 100W and*** ***Property ID: 07 0000 00162 000 in the NW1/4 and SW 1/4 of Section 1, Twp 139N, Range 100W***				
County ***Billings***		Source ID Number ***203-T-0024***		
Capacity	Barrels ***64,996***		Gallons ***2,729,832***	
Dimensions	Diameter ***88'***	Height ***60'***	Length	Width
Shape	☒Cylindrical	☐Spherical	☐Other – Specify:	
Materials of Construction	***Carbon Steel***			
Construction	☐Riveted	☒Welded	☐Other – Specify:	
Color	***Beige***			
Condition	☒Good	☐Fair	☐Poor	
Status	☒New Construction	☐Alteration	☐Existing (Give Date Constructed): _____	
Type of Tank	☒Fixed Roof ☐Variable Vapor Space ☐Pressure (low or high)		☐External Floating ☐ Internal Floating ☐Other – Specify:	
Type of Roof	☐Pan	☐Double Deck	☐Pontoon	☒Other – Specify: ***Cone Roof***
Type of Seal	Metallic Shoe Seal	Liquid Mounted Resilient Seal	Vapor Mounted Resilient Seal	
	☐Primary Seal Only ☐With Rim Mounted Seal ☐With Shoe Mounted Secondary Seal	☐Primary Seal Only ☐With Rim Mounted Seal ☐With Weather Shield	☐Primary Seal Only ☐With Rim Mounted Seal ☐With Weather Shield	

SECTION C – TANK CONTENTS

Fuel Oil, (TVP 0.000028 psia)

SECTION D – VAPOR DISPOSAL

☒Atmosphere	☐Vapor Recovery Unit	☐Flare	☐Other – Specify:

SECTION E – VAPOR PRESSURE DATA

psia	
Maximum True Vapor Pressure ***0.000028***	Maximum Reid Vapor Pressure ***-***

SECTION F – OPERATIONAL DATA

Maximum Filling Rate (barrels per hour or gallons per hour) ***TBD***	Vapor Space Outage (See AP-42, 7.1-92, Equation 1-15) ***14***
Average Throughput (gallons per day) ***131,880***	Tank Turnovers per Year ***21.16***

SECTION G – SOLUTION STORAGE

If material stored is a solution, supply the following information:	
Name of Solvent ***N/A***	Name of Material Dissolved ***N/A***
Concentration of Material Dissolved (% by weight or % by volume or lbs/gal) ***N/A***	

SECTION H – AIR CONTAMINANTS EMITTED

Pollutant*	Maximum Pounds Per Hour	Tons Per Year	Basis and Calculations for Quantities (Attach separate sheet if needed)
2-Methyl naphthalene	***2.3E-05***	***9.9E-05***	***VOC from TANKS 4.0.9d software modeled runs.*** ***HAPs from Table 3-3 of the Emissions Estimation Protocol for Petroleum Refineries*** ***See Document P-5715043-01-001-18042-I001 "EMISSIONS INVENTORY" and P-5715043-01-001-18035-I001 "BACT Analysis"***
Anthracene	***1.5E-06***	***6.8E-06***	
Benzene	***3.5E-04***	***1.5E-03***	
Biphenyl	***0.0E+00***	***0.0E+00***	
Chrysene	***1.4E-06***	***5.9E-06***	
Cresol	***1.2E-06***	***5.4E-06***	
Cumene	***6.4E-05***	***2.8E-04***	
Ethylbenzene	***1.2E-04***	***5.1E-04***	
Fluorene	***2.3E-06***	***1.0E-05***	
Hexane	***3.1E-03***	***1.4E-02***	
Methanol	***2.4E-05***	***1.1E-04***	
Methyl isobutyl ketone	***2.1E-03***	***9.0E-03***	
Methyl tertiary-butyl ether	***0.0E+00***	***0.0E+00***	
Naphthalene	***2.6E-05***	***1.1E-04***	
Phenanthrene	***9.7E-06***	***4.2E-05***	
Phenol	***4.3E-06***	***1.9E-05***	
Pyrene	***2.5E-06***	***1.1E-05***	
Styrene	***0.0E+00***	***0.0E+00***	
Toluene	***6.4E-04***	***2.8E-03***	
Xylene	***4.5E-04***	***2.0E-03***	
VOC	***9.42E-04***	***4.13E-03***	

* Include an estimate of greenhouse gas emissions (CO_2e)

SECTION I – STANDARDS OF PERFORMANCE

Tank subject to:	☐40 CFR 60, Subpart K	☐40 CFR 60, Subpart Ka	☒40 CFR 60, Subpart Kb
Are the standards of performance for new stationary sources; petroleum liquid storage vessels, 40 CFR Part 60, Subparts K, Ka, and Kb being adhered to, where applicable? ☒Yes ☐ No – Explain:			

Signature of Applicant	Date
Tom Williams	09/26/2016

SEND COMPLETED APPLICATION AND ALL ATTACHMENTS TO:

North Dakota Department of Health
Division of Air Quality
918 E Divide Ave., 2nd Floor
Bismarck, ND 58501-1947
(701) 328-5188

PERMIT APPLICATION FOR
VOLATILE ORGANIC COMPOUNDS STORAGE TANK

NORTH DAKOTA DEPARTMENT OF HEALTH
DIVISION OF AIR QUALITY
SFN 8535 (10-13)

SECTION A – FACILITY INFORMATION

Name of Firm or Organization ***Meridian Energy Group – Davis Refinery***		
Applicant´s Name ***Tom Williams***		
Title ***VP of Planning & Permitting***	Telephone Number ***(707) 299-0182***	E-mail Address ***twilliams@meridianenergygroup.inc***
Mailing Address (Street & No.) ***2062 Business Center Drive, Suite 115***		
City ***Irvine***	State ***CA***	ZIP Code ***92612***
Contact Person for Air Pollution Matters ***Tom Johnson***		
Title ***Vice President of Operations***	Telephone Number ***(409)795-0792***	E-mail Address ***tjohnson@meridianenergygroup.inc***

SECTION B – TANK DATA

Legal Description of Facility Site ***Property ID 07 0000 00165 000 in the SE 1/4 of Section 2, Twp 139N, Range 100W and*** ***Property ID: 07 0000 00162 000 in the NW1/4 and SW 1/4 of Section 1, Twp 139N, Range 100W***				
County ***Billings***		Source ID Number ***203-T-0031***		
Capacity	Barrels ***33,312***		Gallons ***1,399,104***	
Dimensions	Diameter ***63'***	Height ***60'***	Length	Width
Shape	☒Cylindrical	☐Spherical	☐Other – Specify:	
Materials of Construction	***Carbon Steel***			
Construction	☐Riveted	☒Welded	☐Other – Specify:	
Color	***Beige***			
Condition	☒Good	☐Fair	☐Poor	
Status	☒New Construction	☐Alteration	☐Existing (Give Date Constructed): _____	
Type of Tank	☐Fixed Roof ☐Variable Vapor Space ☐Pressure (low or high)		☐External Floating ☒ Internal Floating ☐Other – Specify:	
Type of Roof	☐Pan	☒Double Deck	☐Pontoon	☐Other – Specify:
Type of Seal	Metallic Shoe Seal	Liquid Mounted Resilient Seal	Vapor Mounted Resilient Seal	
	☐Primary Seal Only ☐With Rim Mounted Seal ☐With Shoe Mounted Secondary Seal	☐Primary Seal Only ☒With Rim Mounted Seal ☐With Weather Shield	☐Primary Seal Only ☐With Rim Mounted Seal ☐With Weather Shield	

SECTION C – TANK CONTENTS

Light Naphtha, (RVP 15 psia)

SECTION D – VAPOR DISPOSAL

☒Atmosphere	☐Vapor Recovery Unit	☐Flare	☐Other – Specify:

SECTION E – VAPOR PRESSURE DATA

psia	
Maximum True Vapor Pressure **-**	Maximum Reid Vapor Pressure ***15***

SECTION F – OPERATIONAL DATA

Maximum Filling Rate (barrels per hour or gallons per hour) ***TBD***	Vapor Space Outage (See AP-42, 7.1-92, Equation 1-15) ***N/A***
Average Throughput (gallons per day) ***136,500***	Tank Turnovers per Year ***35.61***

SECTION G – SOLUTION STORAGE

If material stored is a solution, supply the following information:	
Name of Solvent ***N/A***	Name of Material Dissolved ***N/A***
Concentration of Material Dissolved (% by weight or % by volume or lbs/gal) ***N/A***	

SECTION H – AIR CONTAMINANTS EMITTED

Pollutant*	Maximum Pounds Per Hour	Tons Per Year	Basis and Calculations for Quantities (Attach separate sheet if needed)
2-Methyl naphthalene	***1.2E-04***	***5.3E-04***	***VOC from TANKS 4.0.9d software modeled runs.*** ***HAPs from Table 3-3 of the Emissions Estimation Protocol for Petroleum Refineries*** ***See Document P-5715043-01-001-18042-I001 "EMISSIONS INVENTORY" and P-5715043-01-001-18035-I001 "BACT Analysis"***
Anthracene	***8.3E-06***	***3.6E-05***	
Benzene	***2.4E-03***	***1.1E-02***	
Biphenyl	***5.9E-06***	***2.6E-05***	
Chrysene	***7.3E-06***	***3.2E-05***	
Cresol	***4.5E-04***	***2.0E-03***	
Cumene	***5.2E-04***	***2.3E-03***	
Ethylbenzene	***1.1E-03***	***4.7E-03***	
Fluorene	***1.2E-05***	***5.5E-05***	
Hexane	***1.5E-02***	***6.4E-02***	
Methanol	***1.3E-04***	***5.8E-04***	
Methyl isobutyl ketone	***1.1E-02***	***4.9E-02***	
Methyl tertiary-butyl ether	***1.1E-02***	***4.7E-02***	
Naphthalene	***2.6E-04***	***1.2E-03***	
Phenanthrene	***5.2E-05***	***2.3E-04***	
Phenol	***3.1E-05***	***1.4E-04***	
Pyrene	***1.4E-05***	***5.9E-05***	
Styrene	***2.3E-03***	***1.0E-02***	
Toluene	***6.2E-03***	***2.7E-02***	
Xylene	***4.8E-03***	***2.1E-02***	
VOC	***8.55E-02***	***3.75E-01***	

* Include an estimate of greenhouse gas emissions (CO_2e)

SECTION I – STANDARDS OF PERFORMANCE

Tank subject to:	☐40 CFR 60, Subpart K	☐40 CFR 60, Subpart Ka	☒40 CFR 60, Subpart Kb
Are the standards of performance for new stationary sources; petroleum liquid storage vessels, 40 CFR Part 60, Subparts K, Ka, and Kb being adhered to, where applicable? ☒Yes ☐ No – Explain:			

Signature of Applicant	Date
	09/26/2016

SEND COMPLETED APPLICATION AND ALL ATTACHMENTS TO:

North Dakota Department of Health
Division of Air Quality
918 E Divide Ave., 2nd Floor
Bismarck, ND 58501-1947
(701) 328-5188

PERMIT APPLICATION FOR
VOLATILE ORGANIC COMPOUNDS STORAGE TANK

NORTH DAKOTA DEPARTMENT OF HEALTH
DIVISION OF AIR QUALITY
SFN 8535 (10-13)

SECTION A – FACILITY INFORMATION

Name of Firm or Organization ***Meridian Energy Group – Davis Refinery***		
Applicant´s Name ***Tom Williams***		
Title ***VP of Planning & Permitting***	Telephone Number ***(707) 299-0182***	E-mail Address ***twilliams@meridianenergygroup.inc***
Mailing Address (Street & No.) ***2062 Business Center Drive, Suite 115***		
City ***Irvine***	State ***CA***	ZIP Code ***92612***
Contact Person for Air Pollution Matters ***Tom Johnson***		
Title ***Vice President of Operations***	Telephone Number ***(409)795-0792***	E-mail Address ***tjohnson@meridianenergygroup.inc***

SECTION B – TANK DATA

Legal Description of Facility Site ***Property ID 07 0000 00165 000 in the SE 1/4 of Section 2, Twp 139N, Range 100W and*** ***Property ID: 07 0000 00162 000 in the NW1/4 and SW 1/4 of Section 1, Twp 139N, Range 100W***				
County ***Billings***		Source ID Number ***203-T-0032***		
Capacity	Barrels ***33,312***		Gallons ***1,399,104***	
Dimensions	Diameter ***63'***	Height ***60'***	Length	Width
Shape	☒Cylindrical	☐Spherical	☐Other – Specify:	
Materials of Construction	***Carbon Steel***			
Construction	☐Riveted	☒Welded	☐Other – Specify:	
Color	***Beige***			
Condition	☒Good	☐Fair	☐Poor	
Status	☒New Construction	☐Alteration	☐Existing (Give Date Constructed): _____	
Type of Tank	☐Fixed Roof ☐Variable Vapor Space ☐Pressure (low or high)		☐External Floating ☒ Internal Floating ☐Other – Specify:	
Type of Roof	☐Pan	☒Double Deck	☐Pontoon	☐Other – Specify:
Type of Seal	Metallic Shoe Seal	Liquid Mounted Resilient Seal	Vapor Mounted Resilient Seal	
	☐Primary Seal Only ☐With Rim Mounted Seal ☐With Shoe Mounted Secondary Seal	☐Primary Seal Only ☒With Rim Mounted Seal ☐With Weather Shield	☐Primary Seal Only ☐With Rim Mounted Seal ☐With Weather Shield	

SECTION C – TANK CONTENTS

Light Naphtha, (RVP 15 psia)

SECTION D – VAPOR DISPOSAL

☒Atmosphere	☐Vapor Recovery Unit	☐Flare	☐Other – Specify:

SECTION E – VAPOR PRESSURE DATA

psia	
Maximum True Vapor Pressure **-**	Maximum Reid Vapor Pressure ***15***

SECTION F – OPERATIONAL DATA

Maximum Filling Rate (barrels per hour or gallons per hour) ***TBD***	Vapor Space Outage (See AP-42, 7.1-92, Equation 1-15) ***N/A***
Average Throughput (gallons per day) ***136,500***	Tank Turnovers per Year ***35.61***

SECTION G – SOLUTION STORAGE

If material stored is a solution, supply the following information:	
Name of Solvent ***N/A***	Name of Material Dissolved ***N/A***
Concentration of Material Dissolved (% by weight or % by volume or lbs/gal) ***N/A***	

SECTION H – AIR CONTAMINANTS EMITTED

Pollutant*	Maximum Pounds Per Hour	Tons Per Year	Basis and Calculations for Quantities (Attach separate sheet if needed)
2-Methyl naphthalene	***1.2E-04***	***5.3E-04***	***VOC from TANKS 4.0.9d software modeled runs.*** ***HAPs from Table 3-3 of the Emissions Estimation Protocol for Petroleum Refineries*** ***See Document P-5715043-01-001-18042-I001 "EMISSIONS INVENTORY" and P-5715043-01-001-18035-I001 "BACT Analysis"***
Anthracene	***8.3E-06***	***3.6E-05***	
Benzene	***2.4E-03***	***1.1E-02***	
Biphenyl	***5.9E-06***	***2.6E-05***	
Chrysene	***7.3E-06***	***3.2E-05***	
Cresol	***4.5E-04***	***2.0E-03***	
Cumene	***5.2E-04***	***2.3E-03***	
Ethylbenzene	***1.1E-03***	***4.7E-03***	
Fluorene	***1.2E-05***	***5.5E-05***	
Hexane	***1.5E-02***	***6.4E-02***	
Methanol	***1.3E-04***	***5.8E-04***	
Methyl isobutyl ketone	***1.1E-02***	***4.9E-02***	
Methyl tertiary-butyl ether	***1.1E-02***	***4.7E-02***	
Naphthalene	***2.6E-04***	***1.2E-03***	
Phenanthrene	***5.2E-05***	***2.3E-04***	
Phenol	***3.1E-05***	***1.4E-04***	
Pyrene	***1.4E-05***	***5.9E-05***	
Styrene	***2.3E-03***	***1.0E-02***	
Toluene	***6.2E-03***	***2.7E-02***	
Xylene	***4.8E-03***	***2.1E-02***	
VOC	***8.55E-02***	***3.75E-01***	

* Include an estimate of greenhouse gas emissions (CO_2e)

SECTION I – STANDARDS OF PERFORMANCE

Tank subject to:	☐40 CFR 60, Subpart K	☐40 CFR 60, Subpart Ka	☒40 CFR 60, Subpart Kb
Are the standards of performance for new stationary sources; petroleum liquid storage vessels, 40 CFR Part 60, Subparts K, Ka, and Kb being adhered to, where applicable? ☒Yes ☐ No – Explain:			

Signature of Applicant	Date
	09/26/2016

SEND COMPLETED APPLICATION AND ALL ATTACHMENTS TO:

North Dakota Department of Health
Division of Air Quality
918 E Divide Ave., 2nd Floor
Bismarck, ND 58501-1947
(701) 328-5188

PERMIT APPLICATION FOR
VOLATILE ORGANIC COMPOUNDS STORAGE TANK

NORTH DAKOTA DEPARTMENT OF HEALTH
DIVISION OF AIR QUALITY
SFN 8535 (10-13)

SECTION A – FACILITY INFORMATION

Name of Firm or Organization ***Meridian Energy Group – Davis Refinery***		
Applicant´s Name ***Tom Williams***		
Title ***VP of Planning & Permitting***	Telephone Number ***(707) 299-0182***	E-mail Address ***twilliams@meridianenergygroup.inc***
Mailing Address (Street & No.) ***2062 Business Center Drive, Suite 115***		
City ***Irvine***	State ***CA***	ZIP Code ***92612***
Contact Person for Air Pollution Matters ***Tom Johnson***		
Title ***Vice President of Operations***	Telephone Number ***(409)795-0792***	E-mail Address ***tjohnson@meridianenergygroup.inc***

SECTION B – TANK DATA

Legal Description of Facility Site ***Property ID 07 0000 00165 000 in the SE 1/4 of Section 2, Twp 139N, Range 100W and*** ***Property ID: 07 0000 00162 000 in the NW1/4 and SW 1/4 of Section 1, Twp 139N, Range 100W***				
County ***Billings***		Source ID Number ***203-T-0033***		
Capacity	Barrels ***2,620***		Gallons ***110,040***	
Dimensions	Diameter ***25'***	Height ***30'***	Length	Width
Shape	☒Cylindrical	☐Spherical	☐Other – Specify:	
Materials of Construction	***Carbon Steel***			
Construction	☐Riveted	☒Welded	☐Other – Specify:	
Color	***Beige***			
Condition	☒Good	☐Fair	☐Poor	
Status	☒New Construction	☐Alteration	☐Existing (Give Date Constructed): _____	
Type of Tank	☐Fixed Roof ☐Variable Vapor Space ☐Pressure (low or high)		☐External Floating ☒ Internal Floating ☐Other – Specify:	
Type of Roof	☐Pan	☒Double Deck	☐Pontoon	☐Other – Specify:
Type of Seal	Metallic Shoe Seal	Liquid Mounted Resilient Seal	Vapor Mounted Resilient Seal	
	☐Primary Seal Only ☐With Rim Mounted Seal ☒With Shoe Mounted Secondary Seal	☐Primary Seal Only ☐With Rim Mounted Seal ☐With Weather Shield	☐Primary Seal Only ☐With Rim Mounted Seal ☐With Weather Shield	

SECTION C – TANK CONTENTS

Light Slops, (RVP 10 psia)

SECTION D – VAPOR DISPOSAL

☐Atmosphere ☒Vapor Recovery Unit ☐Flare ☐Other – Specify:

SECTION E – VAPOR PRESSURE DATA

psia	
Maximum True Vapor Pressure -	Maximum Reid Vapor Pressure ***10 psia***

SECTION F – OPERATIONAL DATA

Maximum Filling Rate (barrels per hour or gallons per hour) ***TBD***	Vapor Space Outage (See AP-42, 7.1-92, Equation 1-15) ***N/A***
Average Throughput (gallons per day) ***5,775***	Tank Turnovers per Year ***22.96***

SECTION G – SOLUTION STORAGE

If material stored is a solution, supply the following information:	
Name of Solvent ***N/A***	Name of Material Dissolved ***N/A***
Concentration of Material Dissolved (% by weight or % by volume or lbs/gal) ***N/A***	

SECTION H – AIR CONTAMINANTS EMITTED

Pollutant*	Maximum Pounds Per Hour	Tons Per Year	Basis and Calculations for Quantities (Attach separate sheet if needed)
2-Methyl naphthalene	***9.53E-06***	***4.2E-05***	***VOC from TANKS 4.0.9d software modeled runs.*** ***HAPs from Table 3-3 of the Emissions Estimation Protocol for Petroleum Refineries*** ***See Document P-5715043-01-001-18042-I001 "EMISSIONS INVENTORY" and P-5715043-01-001-18035-I001 "BACT Analysis"***
Anthracene	***6.54E-07***	***2.9E-06***	
Benzene	***1.91E-04***	***8.4E-04***	
Biphenyl	***4.63E-07***	***2.0E-06***	
Chrysene	***5.72E-07***	***2.5E-06***	
Cresol	***3.54E-05***	***1.6E-04***	
Cumene	***4.09E-05***	***1.8E-04***	
Ethylbenzene	***8.44E-05***	***3.7E-04***	
Fluorene	***9.80E-07***	***4.3E-06***	
Hexane	***1.14E-03***	***5.0E-03***	
Methanol	***1.03E-05***	***4.5E-05***	
Methyl isobutyl ketone	***8.72E-04***	***3.8E-03***	
Methyl tertiary-butyl ether	***8.44E-04***	***3.7E-03***	
Naphthalene	***2.07E-05***	***9.1E-05***	
Phenanthrene	***4.09E-06***	***1.8E-05***	
Phenol	***2.45E-06***	***1.1E-05***	
Pyrene	***1.06E-06***	***4.7E-06***	
Styrene	***1.80E-04***	***7.9E-04***	
Toluene	***4.90E-04***	***2.1E-03***	
Xylene	***3.81E-04***	***1.7E-03***	
VOC	***1.27E-01***	***5.57E-01***	

* Include an estimate of greenhouse gas emissions (CO_2e)

SECTION I – STANDARDS OF PERFORMANCE

Tank subject to:	☐40 CFR 60, Subpart K	☐40 CFR 60, Subpart Ka	☒40 CFR 60, Subpart Kb
Are the standards of performance for new stationary sources; petroleum liquid storage vessels, 40 CFR Part 60, Subparts K, Ka, and Kb being adhered to, where applicable? ☒Yes ☐ No – Explain:			

Signature of Applicant	Date
	09/26/2016

SEND COMPLETED APPLICATION AND ALL ATTACHMENTS TO:

North Dakota Department of Health
Division of Air Quality
918 E Divide Ave., 2nd Floor
Bismarck, ND 58501-1947
(701) 328-5188

PERMIT APPLICATION FOR
VOLATILE ORGANIC COMPOUNDS STORAGE TANK

NORTH DAKOTA DEPARTMENT OF HEALTH
DIVISION OF AIR QUALITY
SFN 8535 (10-13)

SECTION A – FACILITY INFORMATION

Name of Firm or Organization ***Meridian Energy Group – Davis Refinery***		
Applicant´s Name ***Tom Williams***		
Title ***VP of Planning & Permitting***	Telephone Number ***(707) 299-0182***	E-mail Address ***twilliams@meridianenergygroup.inc***
Mailing Address (Street & No.) ***2062 Business Center Drive, Suite 115***		
City ***Irvine***	State ***CA***	ZIP Code ***92612***
Contact Person for Air Pollution Matters ***Tom Johnson***		
Title ***Vice President of Operations***	Telephone Number ***(409)795-0792***	E-mail Address ***tjohnson@meridianenergygroup.inc***

SECTION B – TANK DATA

Legal Description of Facility Site ***Property ID 07 0000 00165 000 in the SE 1/4 of Section 2, Twp 139N, Range 100W and*** ***Property ID: 07 0000 00162 000 in the NW1/4 and SW 1/4 of Section 1, Twp 139N, Range 100W***				
County ***Billings***		Source ID Number ***203-T-0034***		
Capacity	Barrels ***2,620***		Gallons ***110,040***	
Dimensions	Diameter ***25'***	Height ***30'***	Length	Width
Shape	☒Cylindrical	☐Spherical	☐Other – Specify:	
Materials of Construction	***Carbon Steel***			
Construction	☐Riveted	☒Welded	☐Other – Specify:	
Color	***Beige***			
Condition	☒Good	☐Fair	☐Poor	
Status	☒New Construction	☐Alteration	☐Existing (Give Date Constructed): _____	
Type of Tank	☒Fixed Roof ☐Variable Vapor Space ☐Pressure (low or high)		☐External Floating ☐ Internal Floating ☐Other – Specify:	
Type of Roof	☐Pan	☐Double Deck	☐Pontoon	☒Other – Specify: ***Cone Roof***
Type of Seal	Metallic Shoe Seal	Liquid Mounted Resilient Seal	Vapor Mounted Resilient Seal	
	☐Primary Seal Only ☐With Rim Mounted Seal ☐With Shoe Mounted Secondary Seal	☐Primary Seal Only ☐With Rim Mounted Seal ☐With Weather Shield	☐Primary Seal Only ☐With Rim Mounted Seal ☐With Weather Shield	

SECTION C – TANK CONTENTS

Heavy Slops, (TVP 0.000028 – 0.004 psia)

SECTION D – VAPOR DISPOSAL

☒Atmosphere ☐Vapor Recovery Unit ☐Flare ☐Other – Specify:

SECTION E – VAPOR PRESSURE DATA

psia	
Maximum True Vapor Pressure ***0.000028 – 0.004 psia***	Maximum Reid Vapor Pressure ***-***

SECTION F – OPERATIONAL DATA

Maximum Filling Rate (barrels per hour or gallons per hour) ***TBD***	Vapor Space Outage (See AP-42, 7.1-92, Equation 1-15) ***21.67 ft***
Average Throughput (gallons per day) ***5,775***	Tank Turnovers per Year ***22.96***

SECTION G – SOLUTION STORAGE

If material stored is a solution, supply the following information:	
Name of Solvent ***N/A***	Name of Material Dissolved ***N/A***
Concentration of Material Dissolved (% by weight or % by volume or lbs/gal) ***N/A***	

SECTION H – AIR CONTAMINANTS EMITTED

Pollutant*	Maximum Pounds Per Hour	Tons Per Year	Basis and Calculations for Quantities (Attach separate sheet if needed)
2-Methyl naphthalene	***9.09E-07***	***4.0E-06***	***VOC from TANKS 4.0.9d software modeled runs.*** ***HAPs from Table 3-3 of the Emissions Estimation Protocol for Petroleum Refineries*** ***See Document P-5715043-01-001-18042-I001 "EMISSIONS INVENTORY" and P-5715043-01-001-18035-I001 "BACT Analysis"***
Anthracene	***6.23E-08***	***2.7E-07***	
Benzene	***1.40E-05***	***6.1E-05***	
Biphenyl	***0.00E+00***	***0.0E+00***	
Chrysene	***5.45E-08***	***2.4E-07***	
Cresol	***4.93E-08***	***2.2E-07***	
Cumene	***2.60E-06***	***1.1E-05***	
Ethylbenzene	***4.67E-06***	***2.0E-05***	
Fluorene	***9.35E-08***	***4.1E-07***	
Hexane	***1.25E-04***	***5.5E-04***	
Methanol	***9.87E-07***	***4.3E-06***	
Methyl isobutyl ketone	***8.31E-05***	***3.6E-04***	
Methyl tertiary-butyl ether	***0.00E+00***	***0.0E+00***	
Naphthalene	***1.04E-06***	***4.5E-06***	
Phenanthrene	***3.89E-07***	***1.7E-06***	
Phenol	***1.74E-07***	***7.6E-07***	
Pyrene	***1.01E-07***	***4.4E-07***	
Styrene	***0.00E+00***	***0.0E+00***	
Toluene	***2.60E-05***	***1.1E-04***	
Xylene	***1.82E-05***	***8.0E-05***	
VOC	***0.00E+00***	***0.00E+00***	

* Include an estimate of greenhouse gas emissions (CO_2e)

SECTION I – STANDARDS OF PERFORMANCE

Tank subject to:	☐40 CFR 60, Subpart K	☐40 CFR 60, Subpart Ka	☒40 CFR 60, Subpart Kb
Are the standards of performance for new stationary sources; petroleum liquid storage vessels, 40 CFR Part 60, Subparts K, Ka, and Kb being adhered to, where applicable? ☒Yes ☐ No – Explain:			

Signature of Applicant	Date
Jon Williams	09/26/2016

SEND COMPLETED APPLICATION AND ALL ATTACHMENTS TO:

North Dakota Department of Health
Division of Air Quality
918 E Divide Ave., 2nd Floor
Bismarck, ND 58501-1947
(701) 328-5188

PERMIT APPLICATION FOR
AIR POLLUTION CONTROL EQUIPMENT
NORTH DAKOTA DEPARTMENT OF HEALTH
DIVISION OF AIR QUALITY
SFN 8532 (09-12)

NOTE: READ INSTRUCTIONS BEFORE COMPLETING THIS FORM.

SECTION A – GENERAL INFORMATION

Name of Firm or Organization ***Meridian Energy Group - Davis Refinery***		
Applicant's Name ***Tom Williams***		
Title ***VP of Planning &Permitting***	Telephone Number ***(707) 299-0182***	E-mail Address ***twilliams@meridianenergygroup.inc***
Mailing Address (Street & No.) ***2062 Business Center Drive, Suite 115***		
City ***Irvine***	State ***CA***	ZIP Code ***92612***

SECTION B – FACILITY INFORMATION

Facility Name ***Davis Refinery / Process Heaters and Boilers***		
Contact Person for Air Pollution Matters ***Tom Johnson***		
Title ***Vice President of Operations***	Telephone Number ***(409)795-0792***	E-mail Address ***tjohnson@meridianenergygroup.inc***
Facility Location ***Property ID 07 0000 00165 000 in the SE 1/4 of Section 2, Twp 139N, Range 100W and Property ID: 07 0000 00162 000 in the NW1/4 and SW 1/4 of Section 1, Twp 139N, Range 100W***		Source ID No. ***101-H-0101***

SECTION C – EQUIPMENT

Type: ☐ Cyclone ☐ Multicyclone ☐ Baghouse ☐ Electrostatic Precipitator

☐ Wet Scrubber ☐ Spray Dryer ☒ Other – Specify: ***Selective Catalytic Reduction (SCR)***

Name of Manufacturer ***TBD***	Model Number ***TBD***	Date to Be Installed ***TBD***

Application: ☐ Boiler ☐ Kiln ☐ Engine ☒ Other – Specify: ***Process heater***

Pollutants Removed	***NOx***			
Design Efficiency (%)	***TBD***			
Operating Efficiency (%)	***TBD***			

Describe method used to determine operating efficiency:
TBD

SECTION D – GAS CONDITIONS

Gas Conditions			Inlet	Outlet
Gas Volume (SCFM; 68°F; 14.7 psia)			***TBD***	***TBD***
Gas Temperature (°F)			***TBD***	***TBD***
Gas Pressure (in. H_2O)			***TBD***	***TBD***
Gas Velocity (ft/sec)			***TBD***	***TBD***
Pollutant Concentration (Specify Pollutant and Unit of Concentration)	Pollutant	Unit of Concentration		
	NOx	***ppmv***	***TBD (2.160 lb/h)***	***TBD (0.454 lb/h)***
Pressure Drop Through Gas Cleaning Device (in. H_2O) ***TBD***				

Signature of Applicant	Date
Jon Willem	9/26/2016

PERMIT APPLICATION FOR
AIR POLLUTION CONTROL EQUIPMENT
NORTH DAKOTA DEPARTMENT OF HEALTH
DIVISION OF AIR QUALITY
SFN 8532 (09-12)

NOTE: READ INSTRUCTIONS BEFORE COMPLETING THIS FORM.

SECTION A – GENERAL INFORMATION

Name of Firm or Organization ***Meridian Energy Group - Davis Refinery***		
Applicant's Name ***Tom Williams***		
Title ***VP of Planning &Permitting***	Telephone Number ***(707) 299-0182***	E-mail Address ***twilliams@meridianenergygroup.inc***
Mailing Address (Street & No.) ***2062 Business Center Drive, Suite 115***		
City ***Irvine***	State ***CA***	ZIP Code ***92612***

SECTION B – FACILITY INFORMATION

Facility Name ***Davis Refinery / Process Heaters and Boilers***		
Contact Person for Air Pollution Matters ***Tom Johnson***		
Title ***Vice President of Operations***	Telephone Number ***(409)795-0792***	E-mail Address ***tjohnson@meridianenergygroup.inc***
Facility Location ***Property ID 07 0000 00165 000 in the SE 1/4 of Section 2, Twp 139N, Range 100W and Property ID: 07 0000 00162 000 in the NW1/4 and SW 1/4 of Section 1, Twp 139N, Range 100W***		Source ID No. ***102-H-0201***

SECTION C – EQUIPMENT

Type: ☐ Cyclone ☐ Multicyclone ☐ Baghouse ☐ Electrostatic Precipitator

☐ Wet Scrubber ☐ Spray Dryer ☒ Other – Specify: ***Selective Catalytic Reduction (SCR)***

Name of Manufacturer ***TBD***	Model Number ***TBD***	Date to Be Installed ***TBD***

Application: ☐ Boiler ☐ Kiln ☐ Engine ☒ Other – Specify: ***Process heater***

Pollutants Removed	***NOx***			
Design Efficiency (%)	***TBD***			
Operating Efficiency (%)	***TBD***			

Describe method used to determine operating efficiency:
TBD

SECTION D – GAS CONDITIONS

Gas Conditions			Inlet	Outlet
Gas Volume (SCFM; 68°F; 14.7 psia)			***TBD***	***TBD***
Gas Temperature (°F)			***TBD***	***TBD***
Gas Pressure (in. H_2O)			***TBD***	***TBD***
Gas Velocity (ft/sec)			***TBD***	***TBD***
Pollutant Concentration (Specify Pollutant and Unit of Concentration)	Pollutant	Unit of Concentration		
	NOx	***ppmv***	***TBD (2.160 lb/h)***	***TBD (0.454 lb/h)***
Pressure Drop Through Gas Cleaning Device (in. H_2O) ***TBD***				

Signature of Applicant	Date
Tom Williams	9/26/2016

PERMIT APPLICATION FOR
AIR POLLUTION CONTROL EQUIPMENT
NORTH DAKOTA DEPARTMENT OF HEALTH
DIVISION OF AIR QUALITY
SFN 8532 (09-12)

NOTE: READ INSTRUCTIONS BEFORE COMPLETING THIS FORM.

SECTION A – GENERAL INFORMATION

Name of Firm or Organization ***Meridian Energy Group - Davis Refinery***		
Applicant's Name ***Tom Williams***		
Title ***VP of Planning &Permitting***	Telephone Number ***(707) 299-0182***	E-mail Address ***twilliams@meridianenergygroup.inc***
Mailing Address (Street & No.) ***2062 Business Center Drive, Suite 115***		
City ***Irvine***	State ***CA***	ZIP Code ***92612***

SECTION B – FACILITY INFORMATION

Facility Name ***Davis Refinery / Process Heaters and Boilers***		
Contact Person for Air Pollution Matters ***Tom Johnson***		
Title ***Vice President of Operations***	Telephone Number ***(409)795-0792***	E-mail Address ***tjohnson@meridianenergygroup.inc***
Facility Location ***Property ID 07 0000 00165 000 in the SE 1/4 of Section 2, Twp 139N, Range 100W and Property ID: 07 0000 00162 000 in the NW1/4 and SW 1/4 of Section 1, Twp 139N, Range 100W***		Source ID No. ***103-H-0301***

SECTION C – EQUIPMENT

Type: ☐ Cyclone ☐ Multicyclone ☐ Baghouse ☐ Electrostatic Precipitator

☐ Wet Scrubber ☐ Spray Dryer ☒ Other – Specify: ***Selective Catalytic Reduction (SCR)***

Name of Manufacturer ***TBD***	Model Number ***TBD***	Date to Be Installed ***TBD***

Application: ☐ Boiler ☐ Kiln ☐ Engine ☒ Other – Specify: ***Process heater***

Pollutants Removed	***NOx***			
Design Efficiency (%)	***TBD***			
Operating Efficiency (%)	***TBD***			

Describe method used to determine operating efficiency:
TBD

SECTION D – GAS CONDITIONS

Gas Conditions			Inlet	Outlet
Gas Volume (SCFM; 68°F; 14.7 psia)			***TBD***	***TBD***
Gas Temperature (°F)			***TBD***	***TBD***
Gas Pressure (in. H_2O)			***TBD***	***TBD***
Gas Velocity (ft/sec)			***TBD***	***TBD***
Pollutant Concentration (Specify Pollutant and Unit of Concentration)	Pollutant	Unit of Concentration		
	NOx	***ppmv***	***TBD (2.294 lb/h)***	***TBD (0.482 lb/h)***
Pressure Drop Through Gas Cleaning Device (in. H_2O) ***TBD***				

Signature of Applicant	Date
Jon Wilson	9/26/2016

PERMIT APPLICATION FOR
AIR POLLUTION CONTROL EQUIPMENT
NORTH DAKOTA DEPARTMENT OF HEALTH
DIVISION OF AIR QUALITY
SFN 8532 (09-12)

NOTE: READ INSTRUCTIONS BEFORE COMPLETING THIS FORM.

SECTION A – GENERAL INFORMATION

Name of Firm or Organization ***Meridian Energy Group - Davis Refinery***		
Applicant's Name ***Tom Williams***		
Title ***VP of Planning &Permitting***	Telephone Number ***(707) 299-0182***	E-mail Address ***twilliams@meridianenergygroup.inc***
Mailing Address (Street & No.) ***2062 Business Center Drive, Suite 115***		
City ***Irvine***	State ***CA***	ZIP Code ***92612***

SECTION B – FACILITY INFORMATION

Facility Name ***Davis Refinery / Process Heaters and Boilers***		
Contact Person for Air Pollution Matters ***Tom Johnson***		
Title ***Vice President of Operations***	Telephone Number ***(409)795-0792***	E-mail Address ***tjohnson@meridianenergygroup.inc***
Facility Location ***Property ID 07 0000 00165 000 in the SE 1/4 of Section 2, Twp 139N, Range 100W and Property ID: 07 0000 00162 000 in the NW1/4 and SW 1/4 of Section 1, Twp 139N, Range 100W***		Source ID No. ***103-H-0302***

SECTION C – EQUIPMENT

Type: ☐ Cyclone ☐ Multicyclone ☐ Baghouse ☐ Electrostatic Precipitator

☐ Wet Scrubber ☐ Spray Dryer ☒ Other – Specify: ***Selective Catalytic Reduction (SCR)***

Name of Manufacturer ***TBD***	Model Number ***TBD***	Date to Be Installed ***TBD***

Application: ☐ Boiler ☐ Kiln ☐ Engine ☒ Other – Specify: ***Process heater***

Pollutants Removed	***NOx***			
Design Efficiency (%)	***TBD***			
Operating Efficiency (%)	***TBD***			

Describe method used to determine operating efficiency:
TBD

SECTION D – GAS CONDITIONS

Gas Conditions			Inlet	Outlet
Gas Volume (SCFM; 68°F; 14.7 psia)			***TBD***	***TBD***
Gas Temperature (°F)			***TBD***	***TBD***
Gas Pressure (in. H_2O)			***TBD***	***TBD***
Gas Velocity (ft/sec)			***TBD***	***TBD***
Pollutant Concentration (Specify Pollutant and Unit of Concentration)	Pollutant	Unit of Concentration		
	NOx	***ppmv***	***TBD (1.730 lb/h)***	***TBD (0.363 lb/h)***
Pressure Drop Through Gas Cleaning Device (in. H_2O) ***TBD***				

Signature of Applicant	Date
	9/26/2016

PERMIT APPLICATION FOR
AIR POLLUTION CONTROL EQUIPMENT
NORTH DAKOTA DEPARTMENT OF HEALTH
DIVISION OF AIR QUALITY
SFN 8532 (09-12)

NOTE: READ INSTRUCTIONS BEFORE COMPLETING THIS FORM.

SECTION A – GENERAL INFORMATION

Name of Firm or Organization ***Meridian Energy Group - Davis Refinery***		
Applicant's Name ***Tom Williams***		
Title ***VP of Planning &Permitting***	Telephone Number ***(707) 299-0182***	E-mail Address ***twilliams@meridianenergygroup.inc***
Mailing Address (Street & No.) ***2062 Business Center Drive, Suite 115***		
City ***Irvine***	State ***CA***	ZIP Code ***92612***

SECTION B – FACILITY INFORMATION

Facility Name ***Davis Refinery / Process Heaters and Boilers***		
Contact Person for Air Pollution Matters ***Tom Johnson***		
Title ***Vice President of Operations***	Telephone Number ***(409)795-0792***	E-mail Address ***tjohnson@meridianenergygroup.inc***
Facility Location ***Property ID 07 0000 00165 000 in the SE 1/4 of Section 2, Twp 139N, Range 100W and Property ID: 07 0000 00162 000 in the NW1/4 and SW 1/4 of Section 1, Twp 139N, Range 100W***		Source ID No. ***106-H-0601***

SECTION C – EQUIPMENT

Type: ☐ Cyclone ☐ Multicyclone ☐ Baghouse ☐ Electrostatic Precipitator

☐ Wet Scrubber ☐ Spray Dryer ☒ Other – Specify: ***Selective Catalytic Reduction (SCR)***

Name of Manufacturer ***TBD***	Model Number ***TBD***	Date to Be Installed ***TBD***

Application: ☐ Boiler ☐ Kiln ☐ Engine ☒ Other – Specify: ***Process heater***

Pollutants Removed	***NOx***			
Design Efficiency (%)	***TBD***			
Operating Efficiency (%)	***TBD***			

Describe method used to determine operating efficiency:
TBD

SECTION D – GAS CONDITIONS

Gas Conditions			Inlet	Outlet
Gas Volume (SCFM; 68°F; 14.7 psia)			***TBD***	***TBD***
Gas Temperature (°F)			***TBD***	***TBD***
Gas Pressure (in. H_2O)			***TBD***	***TBD***
Gas Velocity (ft/sec)			***TBD***	***TBD***
Pollutant Concentration (Specify Pollutant and Unit of Concentration)	Pollutant	Unit of Concentration		
	NOx	***ppmv***	***TBD (1.252 lb/h)***	***TBD (0.263 lb/h)***
Pressure Drop Through Gas Cleaning Device (in. H_2O) ***TBD***				

Signature of Applicant	Date
	09/26/2016

PERMIT APPLICATION FOR
AIR POLLUTION CONTROL EQUIPMENT
NORTH DAKOTA DEPARTMENT OF HEALTH
DIVISION OF AIR QUALITY
SFN 8532 (09-12)

NOTE: READ INSTRUCTIONS BEFORE COMPLETING THIS FORM.

SECTION A – GENERAL INFORMATION

Name of Firm or Organization ***Meridian Energy Group - Davis Refinery***		
Applicant's Name ***Tom Williams***		
Title ***VP of Planning &Permitting***	Telephone Number ***(707) 299-0182***	E-mail Address ***twilliams@meridianenergygroup.inc***
Mailing Address (Street & No.) ***2062 Business Center Drive, Suite 115***		
City ***Irvine***	State ***CA***	ZIP Code ***92612***

SECTION B – FACILITY INFORMATION

Facility Name ***Davis Refinery / Process Heaters and Boilers***		
Contact Person for Air Pollution Matters ***Tom Johnson***		
Title ***Vice President of Operations***	Telephone Number ***(409)795-0792***	E-mail Address ***tjohnson@meridianenergygroup.inc***
Facility Location ***Property ID 07 0000 00165 000 in the SE 1/4 of Section 2, Twp 139N, Range 100W and Property ID: 07 0000 00162 000 in the NW1/4 and SW 1/4 of Section 1, Twp 139N, Range 100W***		Source ID No. ***107-H-0701***

SECTION C – EQUIPMENT

Type: ☐ Cyclone ☐ Multicyclone ☐ Baghouse ☐ Electrostatic Precipitator

☐ Wet Scrubber ☐ Spray Dryer ☒ Other – Specify: ***Selective Catalytic Reduction (SCR)***

Name of Manufacturer ***TBD***	Model Number ***TBD***	Date to Be Installed ***TBD***

Application: ☐ Boiler ☐ Kiln ☐ Engine ☒ Other – Specify: ***Process heater***

Pollutants Removed	***NOx***			
Design Efficiency (%)	***TBD***			
Operating Efficiency (%)	***TBD***			

Describe method used to determine operating efficiency:
TBD

SECTION D – GAS CONDITIONS

Gas Conditions			Inlet	Outlet
Gas Volume (SCFM; 68°F; 14.7 psia)			***TBD***	***TBD***
Gas Temperature (°F)			***TBD***	***TBD***
Gas Pressure (in. H_2O)			***TBD***	***TBD***
Gas Velocity (ft/sec)			***TBD***	***TBD***
Pollutant Concentration (Specify Pollutant and Unit of Concentration)	Pollutant	Unit of Concentration		
	NOx	***ppmv***	***TBD (2.775lb/h)***	***TBD (0.583 lb/h)***
Pressure Drop Through Gas Cleaning Device (in. H_2O) ***TBD***				

Signature of Applicant	Date
Jon Wilkins	09/26/2016

PERMIT APPLICATION FOR
AIR POLLUTION CONTROL EQUIPMENT
NORTH DAKOTA DEPARTMENT OF HEALTH
DIVISION OF AIR QUALITY
SFN 8532 (09-12)

NOTE: READ INSTRUCTIONS BEFORE COMPLETING THIS FORM.

SECTION A – GENERAL INFORMATION

Name of Firm or Organization ***Meridian Energy Group - Davis Refinery***		
Applicant's Name ***Tom Williams***		
Title ***VP of Planning &Permitting***	Telephone Number ***(707) 299-0182***	E-mail Address ***twilliams@meridianenergygroup.inc***
Mailing Address (Street & No.) ***2062 Business Center Drive, Suite 115***		
City ***Irvine***	State ***CA***	ZIP Code ***92612***

SECTION B – FACILITY INFORMATION

Facility Name ***Davis Refinery / Process Heaters and Boilers***		
Contact Person for Air Pollution Matters ***Tom Johnson***		
Title ***Vice President of Operations***	Telephone Number ***(409)795-0792***	E-mail Address ***tjohnson@meridianenergygroup.inc***
Facility Location ***Property ID 07 0000 00165 000 in the SE 1/4 of Section 2, Twp 139N, Range 100W and Property ID: 07 0000 00162 000 in the NW1/4 and SW 1/4 of Section 1, Twp 139N, Range 100W***		Source ID No. ***118-H-1801***

SECTION C – EQUIPMENT

Type: ☐ Cyclone ☐ Multicyclone ☐ Baghouse ☐ Electrostatic Precipitator

☐ Wet Scrubber ☐ Spray Dryer ☒ Other – Specify: ***Selective Catalytic Reduction (SCR)***

Name of Manufacturer ***TBD***	Model Number ***TBD***	Date to Be Installed ***TBD***

Application: ☐ Boiler ☐ Kiln ☐ Engine ☒ Other – Specify: ***Process heater***

Pollutants Removed	***NOx***			
Design Efficiency (%)	***TBD***			
Operating Efficiency (%)	***TBD***			

Describe method used to determine operating efficiency:
TBD

SECTION D – GAS CONDITIONS

Gas Conditions			Inlet	Outlet
Gas Volume (SCFM; 68°F; 14.7 psia)			***TBD***	***TBD***
Gas Temperature (°F)			***TBD***	***TBD***
Gas Pressure (in. H_2O)			***TBD***	***TBD***
Gas Velocity (ft/sec)			***TBD***	***TBD***
Pollutant Concentration (Specify Pollutant and Unit of Concentration)	Pollutant	Unit of Concentration		
	NOx	***ppmv***	***TBD (2.526 lb/h)***	***TBD (0.530 lb/h)***
Pressure Drop Through Gas Cleaning Device (in. H_2O) ***TBD***				

Signature of Applicant	Date
	09/26/2016

PERMIT APPLICATION FOR
AIR POLLUTION CONTROL EQUIPMENT
NORTH DAKOTA DEPARTMENT OF HEALTH
DIVISION OF AIR QUALITY
SFN 8532 (09-12)

NOTE: READ INSTRUCTIONS BEFORE COMPLETING THIS FORM.

SECTION A – GENERAL INFORMATION

Name of Firm or Organization ***Meridian Energy Group - Davis Refinery***		
Applicant's Name ***Tom Williams***		
Title ***VP of Planning &Permitting***	Telephone Number ***(707) 299-0182***	E-mail Address ***twilliams@meridianenergygroup.inc***
Mailing Address (Street & No.) ***2062 Business Center Drive, Suite 115***		
City ***Irvine***	State ***CA***	ZIP Code ***92612***

SECTION B – FACILITY INFORMATION

Facility Name ***Davis Refinery / Process Heaters and Boilers***		
Contact Person for Air Pollution Matters ***Tom Johnson***		
Title ***Vice President of Operations***	Telephone Number ***(409)795-0792***	E-mail Address ***tjohnson@meridianenergygroup.inc***
Facility Location ***Property ID 07 0000 00165 000 in the SE 1/4 of Section 2, Twp 139N, Range 100W and Property ID: 07 0000 00162 000 in the NW1/4 and SW 1/4 of Section 1, Twp 139N, Range 100W***		Source ID No. ***202-PK-0201A***

SECTION C – EQUIPMENT

Type: ☐ Cyclone ☐ Multicyclone ☐ Baghouse ☐ Electrostatic Precipitator

☐ Wet Scrubber ☐ Spray Dryer ☒ Other – Specify: ***Selective Catalytic Reduction (SCR)***

Name of Manufacturer ***TBD***	Model Number ***TBD***	Date to Be Installed ***TBD***

Application: ☐ Boiler ☐ Kiln ☐ Engine ☒ Other – Specify: ***Utility boiler***

Pollutants Removed	***NOx***	***Organic HAP***		
Design Efficiency (%)	***75***	***75***		
Operating Efficiency (%)	***TBD***	***TBD***		

Describe method used to determine operating efficiency:
TBD

SECTION D – GAS CONDITIONS

Gas Conditions			Inlet	Outlet
Gas Volume (SCFM; 68°F; 14.7 psia)			***TBD***	***TBD***
Gas Temperature (°F)			***TBD***	***TBD***
Gas Pressure (in. H_2O)			***TBD***	***TBD***
Gas Velocity (ft/sec)			***TBD***	***TBD***
Pollutant Concentration (Specify Pollutant and Unit of Concentration)	Pollutant	Unit of Concentration		
	NOx	***ppmv***	***TBD (2.941 lb/h)***	***TBD (0.735 lb/h)***
	Organic HAPs	***ppmv***	***TBD (1.17E-01 lb/h)***	***TBD (2.93E-02 lb/h)***
Pressure Drop Through Gas Cleaning Device (in. H_2O) ***TBD***				

Signature of Applicant	Date
Tom Williams	09/26/2016

PERMIT APPLICATION FOR
AIR POLLUTION CONTROL EQUIPMENT
NORTH DAKOTA DEPARTMENT OF HEALTH
DIVISION OF AIR QUALITY
SFN 8532 (09-12)

NOTE: READ INSTRUCTIONS BEFORE COMPLETING THIS FORM.

SECTION A – GENERAL INFORMATION

Name of Firm or Organization ***Meridian Energy Group - Davis Refinery***		
Applicant's Name ***Tom Williams***		
Title ***VP of Planning &Permitting***	Telephone Number ***(707) 299-0182***	E-mail Address ***twilliams@meridianenergygroup.inc***
Mailing Address (Street & No.) ***2062 Business Center Drive, Suite 115***		
City ***Irvine***	State ***CA***	ZIP Code ***92612***

SECTION B – FACILITY INFORMATION

Facility Name ***Davis Refinery / Process Heaters and Boilers***		
Contact Person for Air Pollution Matters ***Tom Johnson***		
Title ***Vice President of Operations***	Telephone Number ***(409)795-0792***	E-mail Address ***tjohnson@meridianenergygroup.inc***
Facility Location ***Property ID 07 0000 00165 000 in the SE 1/4 of Section 2, Twp 139N, Range 100W and Property ID: 07 0000 00162 000 in the NW1/4 and SW 1/4 of Section 1, Twp 139N, Range 100W***		Source ID No. ***202-PK-0201B***

SECTION C – EQUIPMENT

Type: ☐ Cyclone ☐ Multicyclone ☐ Baghouse ☐ Electrostatic Precipitator

☐ Wet Scrubber ☐ Spray Dryer ☒ Other – Specify: ***Selective Catalytic Reduction (SCR)***

Name of Manufacturer ***TBD***	Model Number ***TBD***	Date to Be Installed ***TBD***

Application: ☐ Boiler ☐ Kiln ☐ Engine ☒ Other – Specify: ***Utility boiler***

Pollutants Removed	***NOx***	***Organic HAP***		
Design Efficiency (%)	***75***	***75***		
Operating Efficiency (%)	***TBD***	***TBD***		

Describe method used to determine operating efficiency:
TBD

SECTION D – GAS CONDITIONS

Gas Conditions			Inlet	Outlet
Gas Volume (SCFM; 68°F; 14.7 psia)			***TBD***	***TBD***
Gas Temperature (°F)			***TBD***	***TBD***
Gas Pressure (in. H_2O)			***TBD***	***TBD***
Gas Velocity (ft/sec)			***TBD***	***TBD***
Pollutant Concentration (Specify Pollutant and Unit of Concentration)	Pollutant	Unit of Concentration		
	NOx	***ppmv***	***TBD (2.941 lb/h)***	***TBD (0.735 lb/h)***
	Organic HAPs	***ppmv***	***TBD (1.17E-01 lb/h)***	***TBD (2.93E-02 lb/h)***
Pressure Drop Through Gas Cleaning Device (in. H_2O) ***TBD***				

Signature of Applicant	Date
	09/26/2016

PERMIT APPLICATION FOR
AIR POLLUTION CONTROL EQUIPMENT
NORTH DAKOTA DEPARTMENT OF HEALTH
DIVISION OF AIR QUALITY
SFN 8532 (09-12)

NOTE: READ INSTRUCTIONS BEFORE COMPLETING THIS FORM.

SECTION A – GENERAL INFORMATION

Name of Firm or Organization ***Meridian Energy Group - Davis Refinery***		
Applicant's Name ***Tom Williams***		
Title ***VP of Planning &Permitting***	Telephone Number ***(707) 299-0182***	E-mail Address ***twilliams@meridianenergygroup.inc***
Mailing Address (Street & No.) ***2062 Business Center Drive, Suite 115***		
City ***Irvine***	State ***CA***	ZIP Code ***92612***

SECTION B – FACILITY INFORMATION

Facility Name ***Davis Refinery / Process Heaters and Boilers***		
Contact Person for Air Pollution Matters ***Tom Johnson***		
Title ***Vice President of Operations***	Telephone Number ***(409)795-0792***	E-mail Address ***tjohnson@meridianenergygroup.inc***
Facility Location ***Property ID 07 0000 00165 000 in the SE 1/4 of Section 2, Twp 139N, Range 100W and Property ID: 07 0000 00162 000 in the NW1/4 and SW 1/4 of Section 1, Twp 139N, Range 100W***		Source ID No. ***202-PK-0201C***

SECTION C – EQUIPMENT

Type: ☐ Cyclone ☐ Multicyclone ☐ Baghouse ☐ Electrostatic Precipitator

☐ Wet Scrubber ☐ Spray Dryer ☒ Other – Specify: ***Selective Catalytic Reduction (SCR)***

Name of Manufacturer ***TBD***	Model Number ***TBD***	Date to Be Installed ***TBD***

Application: ☐ Boiler ☐ Kiln ☐ Engine ☒ Other – Specify: ***Utility boiler***

Pollutants Removed	***NOx***	***Organic HAP***		
Design Efficiency (%)	***75***	***75***		
Operating Efficiency (%)	***TBD***	***TBD***		

Describe method used to determine operating efficiency:
TBD

SECTION D – GAS CONDITIONS

Gas Conditions			Inlet	Outlet
Gas Volume (SCFM; 68°F; 14.7 psia)			***TBD***	***TBD***
Gas Temperature (°F)			***TBD***	***TBD***
Gas Pressure (in. H_2O)			***TBD***	***TBD***
Gas Velocity (ft/sec)			***TBD***	***TBD***
Pollutant Concentration (Specify Pollutant and Unit of Concentration)	Pollutant	Unit of Concentration		
	NOx	***ppmv***	***TBD (2.941 lb/h)***	***TBD (0.735 lb/h)***
	Organic HAPs	***ppmv***	***TBD (1.17E-01 lb/h)***	***TBD (2.93E-02 lb/h)***
Pressure Drop Through Gas Cleaning Device (in. H_2O) ***TBD***				

Signature of Applicant	Date
	09/26/2016

PERMIT APPLICATION FOR
AIR POLLUTION CONTROL EQUIPMENT
NORTH DAKOTA DEPARTMENT OF HEALTH
DIVISION OF AIR QUALITY
SFN 8532 (09-12)

NOTE: READ INSTRUCTIONS BEFORE COMPLETING THIS FORM.

SECTION A – GENERAL INFORMATION

Name of Firm or Organization ***Meridian Energy Group - Davis Refinery***		
Applicant's Name ***Tom Williams***		
Title ***VP of Planning &Permitting***	Telephone Number ***(707) 299-0182***	E-mail Address ***twilliams@meridianenergygroup.inc***
Mailing Address (Street & No.) ***2062 Business Center Drive, Suite 115***		
City ***Irvine***	State ***CA***	ZIP Code ***92612***

SECTION B – FACILITY INFORMATION

Facility Name ***Davis Refinery / FCCU***		
Contact Person for Air Pollution Matters ***Tom Johnson***		
Title ***Vice President of Operations***	Telephone Number ***(409)795-0792***	E-mail Address ***tjohnson@meridianenergygroup.inc***
Facility Location ***Property ID 07 0000 00165 000 in the SE 1/4 of Section 2, Twp 139N, Range 100W and Property ID: 07 0000 00162 000 in the NW1/4 and SW 1/4 of Section 1, Twp 139N, Range 100W***		Source ID No. ***112-VS-1201***

SECTION C – EQUIPMENT

Type: ☐ Cyclone ☐ Multicyclone ☐ Baghouse ☐ Electrostatic Precipitator

☒ ***Wet Scrubber*** ☐ Spray Dryer ☒ Other – Specify:

COP-NP - Non-Platinum
CO combustion promoter

Name of Manufacturer ***TBD***	Model Number ***TBD***	Date to Be Installed ***TBD***

Application: ☐ Boiler ☐ Kiln ☐ Engine ☒ Other – Specify: ***Process Vent***

Pollutants Removed	***PM***	***SO_2***	***NOx***		
Design Efficiency (%)	***98***	***99***	***98***		
Operating Efficiency	***TBD***	***TBD***	***TBD***		

Describe method used to determine operating efficiency:
TBD

SECTION D – GAS CONDITIONS

Gas Conditions			Inlet	Outlet
Gas Volume (SCFM; 68°F; 14.7 psia)			***TBD***	***TBD***
Gas Temperature (°F)			***TBD***	***TBD***
Gas Pressure (in. H_2O)			***TBD***	***TBD***
Gas Velocity (ft/sec)			***TBD***	***TBD***
Pollutant Concentration (Specify Pollutant and Unit of Concentration)	Pollutant	Unit of Concentration		
	PM	***ppmv***	***TBD***	***TBD***
	SO_2	***ppmv***	***TBD***	***TBD***
	NOx	***ppmv***	***TBD***	***TBD***
	VOC	***ppmv***	***TBD***	***TBD***
	HAPs	***ppmv***	***TBD***	***TBD***
Pressure Drop Through Gas Cleaning Device (in. H_2O) ***TBD***				

Signature of Applicant	Date
	09/26/2016

PERMIT APPLICATION FOR
AIR POLLUTION CONTROL EQUIPMENT
NORTH DAKOTA DEPARTMENT OF HEALTH
DIVISION OF AIR QUALITY
SFN 8532 (09-12)

NOTE: READ INSTRUCTIONS BEFORE COMPLETING THIS FORM.

SECTION A – GENERAL INFORMATION

Name of Firm or Organization ***Meridian Energy Group - Davis Refinery***		
Applicant's Name ***Tom Williams***		
Title ***VP of Planning &Permitting***	Telephone Number ***(707) 299-0182***	E-mail Address ***twilliams@meridianenergygroup.inc***
Mailing Address (Street & No.) ***2062 Business Center Drive, Suite 115***		
City ***Irvine***	State ***CA***	ZIP Code ***92612***

SECTION B – FACILITY INFORMATION

Facility Name ***Davis Refinery / SRU Thermal Oxidizer***		
Contact Person for Air Pollution Matters ***Tom Johnson***		
Title ***Vice President of Operations***	Telephone Number ***(409)795-0792***	E-mail Address ***tjohnson@meridianenergygroup.inc***
Facility Location ***Property ID 07 0000 00165 000 in the SE 1/4 of Section 2, Twp 139N, Range 100W and Property ID: 07 0000 00162 000 in the NW1/4 and SW 1/4 of Section 1, Twp 139N, Range 100W***		Source ID No. ***122-H-2201***

SECTION C – EQUIPMENT

Type: ☐ Cyclone ☐ Multicyclone ☐ Baghouse ☐ Electrostatic Precipitator

☐ Wet Scrubber ☐ Spray Dryer ☒ Other – Specify: ***Thermal Oxidizer***

Name of Manufacturer ***TBD***	Model Number ***TBD***	Date to Be Installed ***TBD***

Application: ☐ Boiler ☐ Kiln ☐ Engine ☒ Other – Specify: ***Process Vent***

Pollutants Removed	***VOC***	***H_2S***		
Design Efficiency (%)	***99.9***	***99.9***		
Operating Efficiency (%)	***TBD***	***TBD***		

Describe method used to determine operating efficiency:
TBD

SECTION D – GAS CONDITIONS

Gas Conditions			Inlet	Outlet
Gas Volume (SCFM; 68°F; 14.7 psia)			***3,779.2***	***3,917.2***
Gas Temperature (°F)			***125***	***414.5***
Gas Pressure (in. H_2O)			***TBD***	***406.8***
Gas Velocity (ft/sec)			***TBD***	***50***
Pollutant Concentration (Specify Pollutant and Unit of Concentration)	Pollutant	Unit of Concentration		
	VOC	***ppmv***	***1.54% (molar)***	***16.0***
	SO_2	***ppmv***	***1.13 (H_2S)***	***1.15***
	CO	***ppmv***	***0***	***28.7***
	NO_x	***ppmv***	***0***	***3.84***
Pressure Drop Through Gas Cleaning Device (in. H_2O) ***TBD***				

Signature of Applicant	Date
	9/26/2016

PERMIT APPLICATION FOR
AIR POLLUTION CONTROL EQUIPMENT
NORTH DAKOTA DEPARTMENT OF HEALTH
DIVISION OF AIR QUALITY
SFN 8532 (09-12)

NOTE: READ INSTRUCTIONS BEFORE COMPLETING THIS FORM.

SECTION A – GENERAL INFORMATION

Name of Firm or Organization ***Meridian Energy Group - Davis Refinery***		
Applicant's Name ***Tom Williams***		
Title ***VP of Planning &Permitting***	Telephone Number ***(707) 299-0182***	E-mail Address ***twilliams@meridianenergygroup.inc***
Mailing Address (Street & No.) ***2062 Business Center Drive, Suite 115***		
City ***Irvine***	State ***CA***	ZIP Code ***92612***

SECTION B – FACILITY INFORMATION

Facility Name ***Davis Refinery / Vapor Recovery Unit (VRU)***		
Contact Person for Air Pollution Matters ***Tom Johnson***		
Title ***Vice President of Operations***	Telephone Number ***(409)795-0792***	E-mail Address ***tjohnson@meridianenergygroup.inc***
Facility Location ***Property ID 07 0000 00165 000 in the SE 1/4 of Section 2, Twp 139N, Range 100W and Property ID: 07 0000 00162 000 in the NW1/4 and SW 1/4 of Section 1, Twp 139N, Range 100W***		Source ID No. ***Applied to sources: 203-T-0013, 203-T-0014, 203-T-0015, 203-T-0016, 203-T-0033***

SECTION C – EQUIPMENT

Type: ☐ Cyclone ☐ Multicyclone ☐ Baghouse ☐ Electrostatic Precipitator

☐ Wet Scrubber ☐ Spray Dryer ☒ Other – Specify: ***Vapor Recovery Unit***

Name of Manufacturer ***TBD***	Model Number ***TBD***	Date to Be Installed ***TBD***

Application: ☐ Boiler ☐ Kiln ☐ Engine ☒ Other – Specify: ***Diesel and Slop Tanks***

Pollutants Removed	***VOC***			
Design Efficiency (%)	***95***			
Operating Efficiency (%)	***TBD***			

Describe method used to determine operating efficiency:
TBD

SECTION D – GAS CONDITIONS

Gas Conditions			Inlet	Outlet
Gas Volume (SCFM; 68°F; 14.7 psia)			***TBD***	***TBD***
Gas Temperature (°F)			***TBD***	***TBD***
Gas Pressure (in. H_2O)			***TBD***	***TBD***
Gas Velocity (ft/sec)			***TBD***	***TBD***
Pollutant Concentration (Specify Pollutant and Unit of Concentration)	Pollutant	Unit of Concentration		
	VOC	***ppmv***	***TBD***	***TBD***
Pressure Drop Through Gas Cleaning Device (in. H_2O) ***TBD***				

Signature of Applicant	Date
	09/26/2016

PERMIT APPLICATION FOR FLARES

NORTH DAKOTA DEPARTMENT OF HEALTH
DIVISION OF AIR QUALITY
SFN 59652 (09-12)

SECTION A – GENERAL INFORMATION

Name of Firm or Organization ***Meridian Energy Group – Davis Refinery***		
Applicant's Name ***Tom Williams***		
Title ***VP of Planning & Permitting***	Telephone Number ***(707) 299-0182***	E-mail Address ***twilliams@meridianenergygroup.inc***
Mailing Address (Street & No.) ***2062 Business Center Drive, Suite 115***		
City ***Irvine***	State ***CA***	ZIP Code ***92612***

SECTION B – FACILITY INFORMATION

Facility Name ***Davis Refinery / Enclosed HC Operating Flare***		
ND Air Pollution Control Permit No. (If Applicable) ***N/A***		
Contact Person for Air Pollution Matters ***Tom Johnson***		
Title ***Vice President of Operations***	Telephone Number ***(409)795-0792***	E-mail Address ***tjohnson@meridianenergygroup.inc***
Facility Address (Street & No.) ***37th Street***		
City ***Belfield***	State ***ND***	ZIP Code ***58622***
Country ***USA***	Latitude (Nearest Second) ***46°52'45"N***	Longitude (Nearest Second) ***103°14'55" W***
Legal Description of Facility Site ***Property ID 07 0000 00165 000 in the SE 1/4 of Section 2, Twp 139N, Range 100W and*** ***Property ID: 07 0000 00162 000 in the NW1/4 and SW 1/4 of Section 1, Twp 139N, Range 100W***	MSL Elevation at Facility ***2,685 feet***	Source ID ***207-FL-1701***

SECTION C – FLARE INFORMATION

Use: ☐Emergency ☒Process ☐Both	Subject to NSPS (40 CFR 60.18) ☒Yes ☐No		
Emission Point ID ***207-FL-1701***	Height Above Ground Level (ft.) ***50***	Diameter at Top (ft.) ***30***	
Flame Monitor:	☒Thermocouple ☐Infrared ☐Ultraviolet ☐Acoustic ☐Other:		
Ignition:	☐Automatic ☒Continuous Burning Pilot ☐Other:		
Average Btu/1000 scf ***0.52***	Percent H_2S ***0***	Maximum Hourly Flow Rate to Flare ***24.4 MMSCFD***	

SECTION D – AIR CONTAMINANTS EMITTED

Pollutant	Quantity		Basis Of Estimate
	Pounds/Hr	Tons/Yr	
SO_2	***7.20E-04***	***3.15E-03***	***Criteria Pollutants from Gas pilots: TABLE 1.4-2. AP 42, Chapter 1: External Combustion Sources.*** ***HAPs: Emissions Estimation Protocol for Petroleum Refineries, Table 6-4 "Flare General Emission Factors"*** ***See Document P-5715043-00-001-18042-I001 "EMISSIONS INVENTORY"***
VOC	***6.60E-03***	***2.89E-02***	
NOx	***6.00E-02***	***2.63E-01***	
CO	***1.01E-01***	***4.42E-01***	
PM 10 Total	***9.12E-03***	***3.99E-02***	
PM 10 Filterable	***2.28E-03***	***9.99E-03***	
PM 2.5 Total	***9.12E-03***	***3.99E-02***	
PM 2.5 Filterable	***2.28E-03***	***9.99E-03***	
PM 2.5 Condensable	***6.84E-03***	***3.00E-02***	
Lead (Pb)	***6.00E-07***	***2.63E-06***	
GHG (as CO2e)	***N/A***		
Total HAPS	***5.42E-01***	***2.38***	

Will flaring of gas comply with applicable Ambient Air Quality Standards? ☒Yes ☐No

IS THIS UNIT IN COMPLIANCE WITH ALL APPLICABLE AIR POLLUTION RULES AND REGULATIONS?

☒YES ☐NO

If "NO" a Compliance Schedule must be completed and attached.

Signature of Applicant	Date
	09/26/2016

Attach and label separate sheet(s) if you need more space to explain any system or answers or to provide complete listings of Emissions, Contaminants, or other items.

SEND COMPLETED APPLICATION AND ALL ATTACHMENTS TO:

North Dakota Department of Health
Division of Air Quality
918 E Divide Ave., 2nd Floor
Bismarck, ND 58501-1947
(701) 328-5188

PERMIT APPLICATION FOR FLARES

NORTH DAKOTA DEPARTMENT OF HEALTH
DIVISION OF AIR QUALITY
SFN 59652 (09-12)

SECTION A – GENERAL INFORMATION

Name of Firm or Organization ***Meridian Energy Group – Davis Refinery***		
Applicant's Name ***Tom Williams***		
Title ***VP of Planning & Permitting***	Telephone Number ***(707) 299-0182***	E-mail Address ***twilliams@meridianenergygroup.inc***
Mailing Address (Street & No.) ***2062 Business Center Drive, Suite 115***		
City ***Irvine***	State ***CA***	ZIP Code ***92612***

SECTION B – FACILITY INFORMATION

Facility Name ***Davis Refinery / Acid Flare***		
ND Air Pollution Control Permit No. (If Applicable) ***N/A***		
Contact Person for Air Pollution Matters ***Tom Johnson***		
Title ***Vice President of Operations***	Telephone Number ***(409)795-0792***	E-mail Address ***tjohnson@meridianenergygroup.inc***
Facility Address (Street & No.) ***37th Street***		
City ***Belfield***	State ***ND***	ZIP Code ***58622***
Country ***USA***	Latitude (Nearest Second) ***46°52'45"N***	Longitude (Nearest Second) ***103°14'55" W***
Legal Description of Facility Site ***Property ID 07 0000 00165 000 in the SE 1/4 of Section 2, Twp 139N, Range 100W and Property ID: 07 0000 00162 000 in the NW1/4 and SW 1/4 of Section 1, Twp 139N, Range 100W***	MSL Elevation at Facility ***2,685 feet***	Source ID ***207-FL-1702***

SECTION C – FLARE INFORMATION

Use: ☐Emergency ☒Process ☐Both	Subject to NSPS (40 CFR 60.18) ☒Yes ☐No	
Emission Point ID ***207-FL-1702***	Height Above Ground Level (ft.) ***150***	Diameter at Top (ft.) ***0.8333***
Flame Monitor:	☒Thermocouple ☐Infrared ☐Ultraviolet ☐Acoustic ☐Other:	
Ignition:	☐Automatic ☒Continuous Burning Pilot ☐Other:	
Average Btu/1000 scf ***0.52***	Percent H_2S ***0***	Maximum Hourly Flow Rate to Flare ***15.8 MMSCFD***

SECTION D – AIR CONTAMINANTS EMITTED

Pollutant	Quantity		Basis Of Estimate
	Pounds/Hr	Tons/Yr	
SO2	***1.20E-04***	***5.26E-04***	***Criteria Pollutants from Gas pilots: TABLE 1.4-2. AP 42, Chapter 1: External Combustion Sources.*** ***See Document P-5715043-00-001-18042-I001 "EMISSIONS INVENTORY"***
VOC	***1.10E-03***	***4.82E-03***	
NOx	***1.00E-02***	***4.38E-02***	
CO	***1.68E-02***	***7.36E-02***	
PM 10 Total	***1.52E-03***	***6.66E-03***	
PM 10 Filterable	***3.80E-04***	***1.66E-03***	
PM 2.5 Total	***1.52E-03***	***6.66E-03***	
PM 2.5 Filterable	***3.80E-04***	***1.66E-03***	
PM 2.5 Condensable	***1.14E-03***	***4.99E-03***	
Lead (Pb)	***1.00E-07***	***4.38E-07***	
GHG (as CO2e)	***N/A***		
Total HAPS	***-***	***-***	

Will flaring of gas comply with applicable Ambient Air Quality Standards? ☒Yes ☐No

IS THIS UNIT IN COMPLIANCE WITH ALL APPLICABLE AIR POLLUTION RULES AND REGULATIONS?

☒YES ☐NO

If "NO" a Compliance Schedule must be completed and attached.

Signature of Applicant	Date
	09/26/2016

Attach and label separate sheet(s) if you need more space to explain any system or answers or to provide complete listings of Emissions, Contaminants, or other items.

SEND COMPLETED APPLICATION AND ALL ATTACHMENTS TO:

North Dakota Department of Health
Division of Air Quality
918 E Divide Ave., 2nd Floor
Bismarck, ND 58501-1947
(701) 328-5188

PERMIT APPLICATION FOR FLARES

NORTH DAKOTA DEPARTMENT OF HEALTH
DIVISION OF AIR QUALITY
SFN 59652 (09-12)

SECTION A – GENERAL INFORMATION

Name of Firm or Organization ***Meridian Energy Group – Davis Refinery***		
Applicant's Name ***Tom Williams***		
Title ***VP of Planning & Permitting***	Telephone Number ***(707) 299-0182***	E-mail Address ***twilliams@meridianenergygroup.inc***
Mailing Address (Street & No.) ***2062 Business Center Drive, Suite 115***		
City ***Irvine***	State ***CA***	ZIP Code ***92612***

SECTION B – FACILITY INFORMATION

Facility Name ***Davis Refinery / HC Emergency Flare (Phase 1)***		
ND Air Pollution Control Permit No. (If Applicable) ***N/A***		
Contact Person for Air Pollution Matters ***Tom Johnson***		
Title ***Vice President of Operations***	Telephone Number ***(409)795-0792***	E-mail Address ***tjohnson@meridianenergygroup.inc***
Facility Address (Street & No.) ***37th Street***		
City ***Belfield***	State ***ND***	ZIP Code ***58622***
Country ***USA***	Latitude (Nearest Second) ***46°52'45"N***	Longitude (Nearest Second) ***103°14'55" W***
Legal Description of Facility Site ***Property ID 07 0000 00165 000 in the SE 1/4 of Section 2, Twp 139N, Range 100W and*** ***Property ID: 07 0000 00162 000 in the NW1/4 and SW 1/4 of Section 1, Twp 139N, Range 100W***	MSL Elevation at Facility ***2,685 feet***	Source ID ***207-FL-1703***

SECTION C – FLARE INFORMATION

Use: ☒Emergency ☐Process ☐Both	Subject to NSPS (40 CFR 60.18) ☒Yes ☐No		
Emission Point ID ***207-FL-1703***	Height Above Ground Level (ft.) ***150***	Diameter at Top (ft.) ***3***	
Flame Monitor:	☒Thermocouple ☐Infrared ☐Ultraviolet ☐Acoustic ☐Other:		
Ignition:	☐Automatic ☒Continuous Burning Pilot ☐Other:		
Average Btu/1000 scf ***0.52***	Percent H_2S ***0***	Maximum Hourly Flow Rate to Flare ***74.6 MMSCFD***	

SECTION D – AIR CONTAMINANTS EMITTED

Pollutant	Quantity		Basis Of Estimate
	Pounds/Hr	Tons/Yr	
SO2	***1.80E-04***	***7.88E-04***	***Criteria Pollutants from Gas pilots: TABLE 1.4-2. AP 42, Chapter 1: External Combustion Sources.*** ***See Document P-5715043-00-001-18042-I001 "EMISSIONS INVENTORY"***
VOC	***1.65E-03***	***7.23E-03***	
NOx	***1.50E-02***	***6.57E-02***	
CO	***2.52E-02***	***1.10E-01***	
PM 10 Total	***2.28E-03***	***9.99E-03***	
PM 10 Filterable	***5.70E-04***	***2.50E-03***	
PM 2.5 Total	***2.28E-03***	***9.99E-03***	
PM 2.5 Filterable	***5.70E-04***	***2.50E-03***	
PM 2.5 Condensable	***1.71E-03***	***7.49E-03***	
Lead (Pb)	***1.50E-07***	***6.57E-07***	
GHG (as CO2e)	***N/A***		
Total HAPS	***-***	***-***	

Will flaring of gas comply with applicable Ambient Air Quality Standards? ☒Yes ☐No

IS THIS UNIT IN COMPLIANCE WITH ALL APPLICABLE AIR POLLUTION RULES AND REGULATIONS?

☒YES ☐NO

If "NO" a Compliance Schedule must be completed and attached.

Signature of Applicant	Date
Jon Wilkins	09/26/2016

Attach and label separate sheet(s) if you need more space to explain any system or answers or to provide complete listings of Emissions, Contaminants, or other items.

SEND COMPLETED APPLICATION AND ALL ATTACHMENTS TO:

North Dakota Department of Health
Division of Air Quality
918 E Divide Ave., 2nd Floor
Bismarck, ND 58501-1947
(701) 328-5188

PERMIT APPLICATION FOR FLARES

NORTH DAKOTA DEPARTMENT OF HEALTH
DIVISION OF AIR QUALITY
SFN 59652 (09-12)

SECTION A – GENERAL INFORMATION

Name of Firm or Organization ***Meridian Energy Group – Davis Refinery***		
Applicant's Name ***Tom Williams***		
Title ***VP of Planning & Permitting***	Telephone Number ***(707) 299-0182***	E-mail Address ***twilliams@meridianenergygroup.inc***
Mailing Address (Street & No.) ***2062 Business Center Drive, Suite 115***		
City ***Irvine***	State ***CA***	ZIP Code ***92612***

SECTION B – FACILITY INFORMATION

Facility Name ***Davis Refinery / HC Emergency Flare (Phase 2)***		
ND Air Pollution Control Permit No. (If Applicable) ***N/A***		
Contact Person for Air Pollution Matters ***Tom Johnson***		
Title ***Vice President of Operations***	Telephone Number ***(409)795-0792***	E-mail Address ***tjohnson@meridianenergygroup.inc***
Facility Address (Street & No.) ***37th Street***		
City ***Belfield***	State ***ND***	ZIP Code ***58622***
Country ***USA***	Latitude (Nearest Second) ***46°52'45"N***	Longitude (Nearest Second) ***103°14'55" W***
Legal Description of Facility Site ***Property ID 07 0000 00165 000 in the SE 1/4 of Section 2, Twp 139N, Range 100W and*** ***Property ID: 07 0000 00162 000 in the NW1/4 and SW 1/4 of Section 1, Twp 139N, Range 100W***	MSL Elevation at Facility ***2,685 feet***	Source ID ***207-FL-1704***

SECTION C – FLARE INFORMATION

Use: ☒Emergency ☐Process ☐Both	Subject to NSPS (40 CFR 60.18) ☒Yes ☐No		
Emission Point ID ***207-FL-1704***	Height Above Ground Level (ft.) ***150***	Diameter at Top (ft.) ***3***	
Flame Monitor:	☒Thermocouple ☐Infrared ☐Ultraviolet ☐Acoustic ☐Other:		
Ignition:	☐Automatic ☒Continuous Burning Pilot ☐Other:		
Average Btu/1000 scf ***0.52***	Percent H_2S ***0***	Maximum Hourly Flow Rate to Flare ***88.8 MMSCFD***	

SECTION D – AIR CONTAMINANTS EMITTED

Pollutant	Quantity		Basis Of Estimate
	Pounds/Hr	Tons/Yr	
SO2	***1.80E-04***	***7.88E-04***	***Criteria Pollutants from Gas pilots: TABLE 1.4-2. AP 42, Chapter 1: External Combustion Sources.*** ***See Document P-5715043-00-001-18042-I001 "EMISSIONS INVENTORY"***
VOC	***1.65E-03***	***7.23E-03***	
NOx	***1.50E-02***	***6.57E-02***	
CO	***2.52E-02***	***1.10E-01***	
PM 10 Total	***2.28E-03***	***9.99E-03***	
PM 10 Filterable	***5.70E-04***	***2.50E-03***	
PM 2.5 Total	***2.28E-03***	***9.99E-03***	
PM 2.5 Filterable	***5.70E-04***	***2.50E-03***	
PM 2.5 Condensable	***1.71E-03***	***7.49E-03***	
Lead (Pb)	***1.50E-07***	***6.57E-07***	
GHG (as CO2e)	***N/A***		
Total HAPS	***-***	***-***	

Will flaring of gas comply with applicable Ambient Air Quality Standards? ☒Yes ☐No

IS THIS UNIT IN COMPLIANCE WITH ALL APPLICABLE AIR POLLUTION RULES AND REGULATIONS?

☒YES ☐NO

If "NO" a Compliance Schedule must be completed and attached.

Signature of Applicant	Date
Jon Wilkins	09/26/2016

Attach and label separate sheet(s) if you need more space to explain any system or answers or to provide complete listings of Emissions, Contaminants, or other items.

SEND COMPLETED APPLICATION AND ALL ATTACHMENTS TO:

North Dakota Department of Health
Division of Air Quality
918 E Divide Ave., 2nd Floor
Bismarck, ND 58501-1947
(701) 328-5188

PERMIT APPLICATION FOR
INTERNAL COMBUSTION ENGINES AND TURBINES

NORTH DAKOTA DEPARTMENT OF
HEALTH DIVISION OF AIR QUALITY
SFN 8891 (09-12)

SECTION A – GENERAL INFORMATION

Name of Firm or Organization ***Meridian Energy Group – Davis Refinery***		
Applicant's Name ***Tom Williams***		
Title ***VP of Planning & Permitting***	Telephone Number ***(707) 299-0182***	E-mail Address ***twilliams@meridianenergygroup.inc***
Mailing Address (Street & No.) ***2062 Business Center Drive, Suite 115***		
City ***Irvine***	State ***CA***	ZIP Code ***92612***
Contact Person for Air Pollution Matters ***Tom Johnson***		
Title ***Vice President of Operations***	Telephone Number ***(409)795-0792***	E-mail Address ***tjohnson@meridianenergygroup.inc***

SECTION B – FACILITY AND UNIT INFORMATION

Facility Location ***37th Street, Belfield, ND. ZIP: 58622***		
County ***Billings***	Source ID Number (From SFN 8516) ***212-P-1201 A/B/C***	
Type of Unit (check all that apply)	☐Stationary Natural Gas-Fired Engine ☒Stationary Diesel and Dual Fuel ☐Engine Stationary Gasoline Engine ☐Stationary Natural Gas-Fired Turbine	☒Emergency Use ☐Only Non- Emergency ☐Use Peaking ☐Demand Response
	Other – Specify: ***Firewater Diesel Pump***	

SECTION C – MANUFACTURER DATA

Make ***TBD***	Model ***TBD***		Date of Manufacture ***TBD***
Reciprocating Internal Combustion Engine			
☒ Spark Ignition ☐Compression Ignition			
☐ 4 Stroke ☐ 2 Stroke		☐Rich Burn ☐ Lean Burn	
Maximum Rating (BHP @ rpm) ***TBD***		Operating Capacity (BHP @ rpm) ***600 HP each***	
Engine Subject to: ☒ 40 CFR 60, Subpart IIII ☒ 40 CFR 60, Subpart JJJJ ☒ 40 CFR 63, Subpart ZZZZ			
Turbine		Dry Low Emissions? ☐ Yes ☐ No	
Heat Input (MMBtu/hr)	Maximum Rating (HP)	75% Rating (HP)	Efficiency
Turbine Subject to: ☐ 40 CFR 60, Subpart GG ☐ 40 CFR 60, Subpart KKKK			

SECTION D – FUELS USED

Natural Gas (10^6 cu ft/year)	Percent Sulfur	Percent H_2S
Oil (gal/year)	Percent Sulfur	Grade No.
LP Gas (gal/year)	Other – Specify: ***Diesel <0.05% sulfur. 3,334 gal/year***	

SECTION E – NORMAL OPERATING SCHEDULE

Hours Per Day	Days Per Week	Weeks Per Year	Hours Per Year	Peak Production Season (if any)
N/A	***N/A***	***N/A***	***100 (emergency)***	***N/A***

SECTION F – STACK PARAMETERS

Emission Point		Stack Height Above Ground Level (feet)	
212-P-1201 A/B/C		***TBD***	
Stack Diameter (feet at top)	Gas Discharged (SCFM)	Exit Temp (°F)	Gas Velocity (FPS)
TBD	***TBD***	***TBD***	***TBD***

SECTION G – EMISSION CONTROL EQUIPMENT

Is any emission control equipment installed on this unit?

☒ No ☐Yes – Complete and attach form SFN 8532

SECTION H – MAXIMUM AIR CONTAMINANTS EMITTED

Emission Point	Pollutant	Maximum Pounds Per Hour	Amount (Tons Per Year)	Basis of Estimate*
	NO_X	***23.40***	***1.17***	***Emission factors From AP-42 Chapter 3 Section 3.4. Large Stationary Diesel And All Stationary Dual-fuel Engines. See Document P-5715043-01-001-18042-I001 "EMISSIONS INVENTORY" and P-5715043-01-001-18035-I001 "BACT Analysis"***
	CO	***9.90***	***0.50***	
	PM	***1.26***	***0.06***	
	PM 10 (Total)	***7.85E-01***	***3.93E-02***	
	PM 10 (Filterable)	***6.80E-01***	***3.40E-02***	
	PM 2.5 (Total)	***6.56E-01***	***3.28E-02***	
	PM 2.5(Filterable)	***6.56E-01***	***3.28E-02***	
	PM (Condensable)	***1.06E-01***	***5.28E-03***	
	SO_2	***7.28E-03***	***3.64E-04***	
	VOC	***1.27***	***6.35E-02***	
	GHG (as CO_2e)	***N/A***	***N/A***	
	Formaldehyde	***1.08E-03***	***5.41E-05***	
	Total HAPS**	***5.98E-02***	***2.99E-03***	

* If performance test results are available for the unit, submit a copy of test with this application

** Total HAPS includes formaldehyde

IS THIS UNIT IN COMPLIANCE WITH ALL APPLICABLE AIR POLLUTION RULES AND REGULATIONS? ☒YES ☐NO	If "NO" a Compliance Schedule must be completed and attached.

Signature of Applicant	Date
	09/26/2016

Attach and label separate sheet(s) if you need more space to explain any system or answers or to provide complete listings of Emissions, Contaminants, or other items.

SEND COMPLETED APPLICATION AND ALL ATTACHMENTS TO:

North Dakota Department of Health
Division of Air Quality
918 E Divide Ave., 2nd Floor
Bismarck, ND 58501-1947
(701) 328-5188

PERMIT APPLICATION FOR
INTERNAL COMBUSTION ENGINES AND TURBINES

NORTH DAKOTA DEPARTMENT OF
HEALTH DIVISION OF AIR QUALITY
SFN 8891 (09-12)

SECTION A – GENERAL INFORMATION

Name of Firm or Organization ***Meridian Energy Group – Davis Refinery***		
Applicant's Name ***Tom Williams***		
Title ***VP of Planning & Permitting***	Telephone Number ***(707) 299-0182***	E-mail Address ***twilliams@meridianenergygroup.inc***
Mailing Address (Street & No.) ***2062 Business Center Drive, Suite 115***		
City ***Irvine***	State ***CA***	ZIP Code ***92612***
Contact Person for Air Pollution Matters ***Tom Johnson***		
Title ***Vice President of Operations***	Telephone Number ***(409)795-0792***	E-mail Address ***tjohnson@meridianenergygroup.inc***

SECTION B – FACILITY AND UNIT INFORMATION

Facility Location ***37th Street, Belfield, ND. ZIP: 58622***		
County ***Billings***	Source ID Number (From SFN 8516) ***216-EG-1601 A/B/C***	
Type of Unit (check all that apply)	☒Stationary Natural Gas-Fired Engine ☒Stationary Diesel and Dual Fuel ☐Engine Stationary Gasoline Engine ☐Stationary Natural Gas-Fired Turbine	☒Emergency Use ☐Only Non- Emergency ☐Use Peaking ☐Demand Response
	Other – Specify: ***Diesel/Natural gas-fired emergency generator set***	

SECTION C – MANUFACTURER DATA

Make ***TBD***	Model ***TBD***		Date of Manufacture ***TBD***
Reciprocating Internal Combustion Engine			
☒ Spark Ignition ☐Compression Ignition			
☐ 4 Stroke ☐ 2 Stroke		☐Rich Burn ☐ Lean Burn	
Maximum Rating (BHP @ rpm) ***TBD***		Operating Capacity (BHP @ rpm) ***3.5 MW each (4,700 HP each)***	
Engine Subject to: ☒ 40 CFR 60, Subpart IIII ☒ 40 CFR 60, Subpart JJJJ ☒ 40 CFR 63, Subpart ZZZZ			
Turbine		Dry Low Emissions? ☐ Yes ☐ No	
Heat Input (MMBtu/hr)	Maximum Rating (HP)	75% Rating (HP)	Efficiency
Turbine Subject to: ☐ 40 CFR 60, Subpart GG ☐ 40 CFR 60, Subpart KKKK			

SECTION D – FUELS USED

Natural Gas (10^6 cu ft/year) ***TBD***	Percent Sulfur	Percent H_2S
Oil (gal/year)	Percent Sulfur	Grade No.
LP Gas (gal/year)	Other – Specify: ***Diesel <0.05% sulfur. 4,230 gal/year***	

SECTION E – NORMAL OPERATING SCHEDULE

Hours Per Day	Days Per Week	Weeks Per Year	Hours Per Year	Peak Production Season (if any)
N/A	***N/A***	***N/A***	***100 (emergency)***	***N/A***

SECTION F – STACK PARAMETERS

Emission Point		Stack Height Above Ground Level (feet)	
216-EG-1601 A/B/C		***TBD***	
Stack Diameter (feet at top)	Gas Discharged (SCFM)	Exit Temp (°F)	Gas Velocity (FPS)
TBD	***TBD***	***TBD***	***TBD***

SECTION G – EMISSION CONTROL EQUIPMENT

Is any emission control equipment installed on this unit?

☒ No ☐Yes – Complete and attach form SFN 8532

SECTION H – MAXIMUM AIR CONTAMINANTS EMITTED

Emission Point	Pollutant	Maximum Pounds Per Hour	Amount (Tons Per Year)	Basis of Estimate*
	NO_X	***183.05***	***9.15***	***Emission factors From AP-42 Chapter 3 Section 3.4. Large Stationary Diesel And All Stationary Dual-fuel Engines. See Document P-5715043-01-001-18042-I001 "EMISSIONS INVENTORY" and P-5715043-01-001-18035-I001 "BACT Analysis"***
	CO	***77.44***	***3.87***	
	PM	***9.86***	***0.49***	
	PM 10 (Total)	***9.96***	***4.98E-01***	
	PM 10 (Filterable)	***8.62***	***4.31E-01***	
	PM 2.5 (Total)	***8.33***	***4.16E-01***	
	PM 2.5(Filterable)	***8.33***	***4.16E-01***	
	PM (Condensable)	***1.34***	***6.69E-02***	
	SO_2	***5.70E-02***	***2.85E-03***	
	VOC	***9.93***	***4.96E-01***	
	GHG (as CO_2e)	***N/A***	***N/A***	
	Formaldehyde	***1.37E-02***	***6.86E-04***	
	Total HAPS**	***7.59E-01***	***3.79E-02***	

* If performance test results are available for the unit, submit a copy of test with this application

** Total HAPS includes formaldehyde

IS THIS UNIT IN COMPLIANCE WITH ALL APPLICABLE AIR POLLUTION RULES AND REGULATIONS? ☒YES ☐NO	If "NO" a Compliance Schedule must be completed and attached.

Signature of Applicant	Date
	09/26/2016

Attach and label separate sheet(s) if you need more space to explain any system or answers or to provide complete listings of Emissions, Contaminants, or other items.

SEND COMPLETED APPLICATION AND ALL ATTACHMENTS TO:

North Dakota Department of Health
Division of Air Quality
918 E Divide Ave., 2nd Floor
Bismarck, ND 58501-1947
(701) 328-5188

Exhibit B: Emissions Inventory

VEPICA CODE : P-5715043-01-001-18042-I001 **SHEET** 1 **OF** 224

COMPANY CODE: TBD

TITLE: EMISSIONS INVENTORY

PROJECT Nº : P-5715043

NAME : PERMITTING SUPPORT – DAVIS REFINERY

CLIENT : MERIDIAN ENERGY GROUP INC.

LOCATION : BILLINGS COUNTY, NORTH DAKOTA

0	09/23/16	ISSUED FOR PTC	J. GOMEZ J. SOLANO	A. PEÑA	C. GARCÍA	T. JOHNSON
ISSUE	**DATE**	**DESCRIPTION**	**PREPARED**	**REVIEWED**	**APPROVED VEPICA**	**APPROVED CLIENT**

INDEX

DESCRIPTION **SHEET**

1. INTRODUCTION 3
2. DOCUMENT SCOPE 3
3. LOCATION 4
4. EMISSION INVENTORY METHODOLOGY 6
   4.1. Sources Identification 6
   4.2. Emission Estimation – Basis and Assumptions 17
5. CALCULATION BASIS 19
   5.1. Equipment Leaks 19
   5.2. Storage Tanks Emissions 20
   5.3. Stationary Combustion Sources 20
   5.4. Process Vents 21
   5.5. Flares 23
   5.6. Wastewater Treatment Systems 24
   5.7. Cooling Towers 24
   5.8. Product Loading 25
   5.9. Fugitive Dust 25
6. BASE CASE EMISSIONS INVENTORY 25
7. PROPOSED DAVIS REFINERY POTENTIAL TO EMIT 27
8. REFERENCES 30
9. APPENDIXES 30

1. INTRODUCTION

Meridian Energy Group (MEG) has engaged VEPICA to develop an air permit application for construction of the 55,000 BPD (barrels per day) oil Davis Refinery in Billings County, North Dakota.

The present document comprises the Emissions Inventory from Davis Refinery, based on the available engineering data and guidelines stablished in EPA *Emissions Estimation Protocol for Petroleum Refineries, Version 3* (RTI International, April 2015).

2. DOCUMENT SCOPE

This emission inventory includes the estimation of annual atmospheric discharges of criteria pollutants and hazardous air pollutants (HAPs) from primary sources within the refinery, categorized as follows:

- Equipment Leaks
- Storage Tanks
- Stationary Combustion
- Process Vents
- Flares
- Wastewater Treatment Systems
- Cooling Towers
- Product Loading
- Fugitive Dust

It is important to highlight that the estimations for New Source Review (NSR) regulated pollutants presented in this document comprise normal operation scenario for these main units using the engineering, licensor and vendor data available to date. Other Emission categories indicated in the protocol, such as, Startup/Shutdown and Malfunctions, are not considered in this scope.

Additionally, Greenhouse Gas (GHG) emissions are not included as part of this inventory since GHG are not “Regulated NSR pollutant”, in accordance NDAC 33-15-15 and 33-15-16. Regulated NSR pollutants for petroleum refineries include particulate matter (PM), particulate matter with a diameter of 10 microns or less (PM_{10}), particulate matter with a diameter of 2.5 microns or less ($PM_{2.5}$), sulfur dioxide (SO_2), nitrogen oxides (NOx), carbon monoxide (CO), ozone (as VOCs), lead (Pb), hydrogen sulphide (H_2S) and reduced sulfur compounds.

3. LOCATION

The oil Davis Refinery will be located in Billings County, North Dakota. Figure 1 shows the site layout and its geographical location.

FIGURE 1.: SITE LOCATION MAP

PROCESS STUDY FOR THE 55,000 BPSD DAVIS REFINERY IN BILLINGS COUNTY, ND

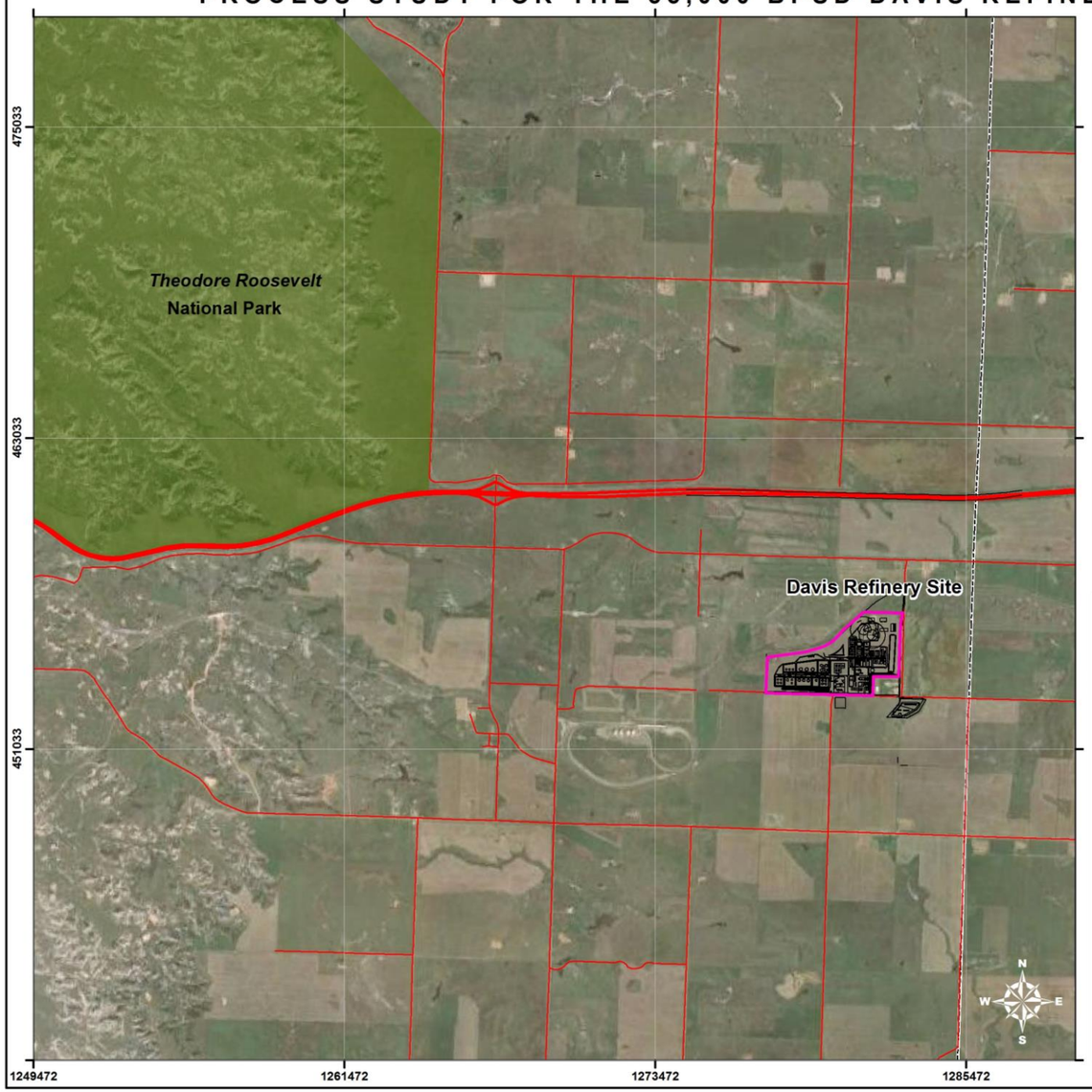

RELATIVE REGIONAL LOCATION

RELATIVE NATIONAL LOCATION

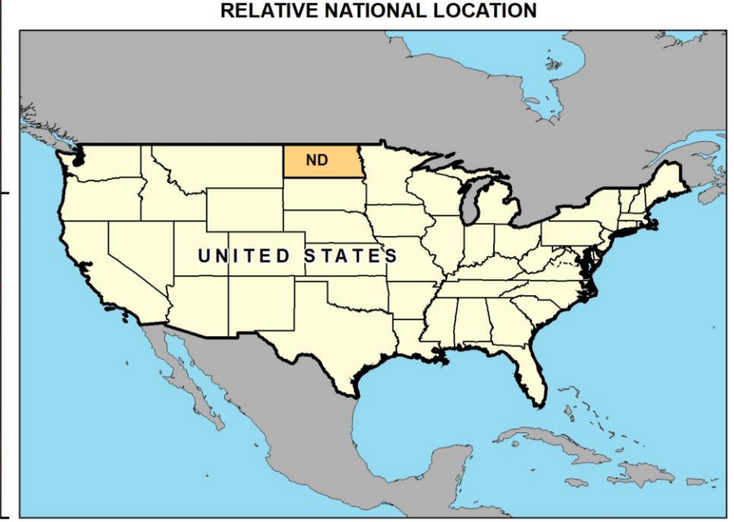

4. EMISSION INVENTORY METHODOLOGY

This section describes the methodology and main activities performed to prepare the detailed emissions inventory of the Emission Units associated with the refinery operations

4.1. Sources Identification

Identification of primary sources was made based on the review of engineering data of process units, specifically: block and process flow diagrams (BFD & PFDs), process descriptions and data sheets.

"Potential to emit" has the meaning given to it in NDAC 33-15-14-06: *"the maximum capacity of a stationary source to emit any air contaminant under its physical and operational design. Any physical or operational limitation on the capacity of a source to emit an air contaminant, including air pollution control equipment and restrictions on hours of operation or on the type or amount of material combusted, stored, or processed, shall be treated as part of its design if the limitation is enforceable by the administrator of the United States environmental protection agency and the department."* For a petroleum refinery, quantifiable fugitive emissions must also be included with point source emissions in the facility-wide PTE calculation.

"Emissions Unit" in accordance with NDAC 33-15-14-06 *"means any part or activity of a stationary source that emits or has the potential to emit any regulated air contaminant or any contaminant listed under section 112(b) of the Federal Clean Air Act."*

The emission units of the proposed Davis Refinery include:

Process Units

1. Atmospheric Distillation Unit #1 & #2: heaters.
2. Vacuum Distillation Unit: heaters.
3. Light Naphtha Hydrotreater: heater.
4. Heavy Naphtha Hydrotreater Unit: heaters.
5. Diesel Hydrotreater Unit: heater.
6. Catalytic Reforming Units #1 & #2: heaters and regenerator vents.
7. Fluid Catalytic Cracking (FCC) Unit (including gas concentrator): heater and regenerator vent.

8. FCC Naphtha Hydrotreater: heater.
9. Kerosene Hydrotreater: heater.
10. Isomerization Unit: heaters.
11. Alkylation Unit: heater.
12. SRU - Thermal Oxidizer: thermal oxidizer vent stack.
13. Tank Farm (through relief valves in each tank), including crude oil (feed), intermediate products and final products.
14. Flare System.

<u>Main Utilities</u>

15. Boiler #1, #2 & #3 (in stand-by).
16. Waste Water Treatment System: equalization tank, API, IGF, MBR (fugitive).
17. Cooling Water System: drift loss in cooling tower.
18. Loading Stations: product loading operations.
19. Emergency Generator (Diesel): internal combustion engine exhaust stack.
20. Firewater Diesel Pump: exhaust stack
21. Emergency Power Generator: exhaust stack

The emission sources identified for each primary units of the refinery are listed as follows in Table 1. Figure 2 shows the identification of emission units in a block flow diagram.

Table 1: Identified emission sources

Unit Number	Unit Description	Emission Unit Description	TAG	Point ID	Point Number	Air Pollution Control Equipment (inherent to design)
101	Atmospheric Distillation Unit #1	ADU #1 heater rated 72.00 MMBTU/h and fired on refinery fuel gas	101-H-0101	101H0101	1	Best combustion practices. Ultra Low NOx Burner
102	Atmospheric Distillation Unit #2	ADU #2 heater rated 72.00 MMBTU/h and fired on refinery fuel gas	102-H-0201	102H0201	2	Best combustion practices. Ultra Low NOx Burner
103	Vacuum Distillation Unit	VDU heater #1 rated 76.47 MMBTU/h and fired on refinery fuel gas	103-H-0301	103H0301	3	Best combustion practices. Ultra Low NOx Burner
		VDU heater #2 rated 57.65 MMBTU/h and fired on refinery fuel gas	103-H-0302	103H0302	4	Best combustion practices. Ultra Low NOx Burner
105	Heavy Naphtha Hydrotreater	HNHT heater #1 rated 13.75 MMBTU/h and fired on refinery fuel gas	105-H-0501	105H0501	5	Best combustion practices. Ultra Low NOx Burner
		HNHT heater #2 rated 16.25 MMBTU/h and fired on refinery fuel gas	105-H-0502	105H0502	6	Best combustion practices. Ultra Low NOx Burner
106	Catalytic Reformer Unit #2	CRU #2 heater with a combined rating of 41.73 MMBTU/h and fired on refinery fuel gas	106-H-0601	106H0601	7	Best combustion practices. Ultra Low NOx Burner

Unit Number	Unit Description	Emission Unit Description	TAG	Point ID	Point Number	Air Pollution Control Equipment (inherent to design)
107	Catalytic Reformer Unit #1	CRU #1 heater with a combined rating of 92.50 MMBTU/h and fired on refinery fuel gas	107-H-0701	107H0701	8	Best combustion practices. Ultra Low NOx Burner
110	Diesel Hydrotreater	Diesel HDT heater rated 16.25 MMBTU/h and fired on refinery fuel gas	110-H-1001	110H1001	9	Best combustion practices. Ultra Low NOx Burner
111	Light Naphtha Hydrotreater	LNHT heater rated 13.90MMBTU/h and fired on refinery fuel gas	111-H-1101	111H1101	10	Best combustion practices. Ultra Low NOx Burner
112	Fluid Catalytic Cracking (FCC) Unit	Regenerator vent stack	112-VS-1201	112VS1201	11	Best combustion practices (complete Carbon burn regenerator design)*
		FCCU heater rated 28.35 MMBTU/h and fired on refinery fuel gas	112-H-1201	112H1201	12	Best combustion practices. Ultra Low NOx Burner
114	FCC Naphtha Hydrotreater	FCC Naphtha HDT heater rated 17.48 MMBTU/h and fired on refinery fuel gas	114-H-1401	114H1401	13	Best combustion practices. Ultra Low NOx Burner
117	Isomerization Unit	Isomerization heater #1 rated 1.65 MMBTU/h and fired on refinery fuel gas	117-H-1701	117H1701	14	Best combustion practices. Ultra Low NOx Burner
		Isomerization heater #2 rated 3.75 MMBTU/h and fired on refinery fuel gas	117-H-1702	117H1702	15	Best combustion practices. Ultra Low NOx Burner

Unit Number	Unit Description	Emission Unit Description	TAG	Point ID	Point Number	Air Pollution Control Equipment (inherent to design)
118	Alkylation Unit	Alkylation heater rated 84.19 MMBTU/h and fired on refinery fuel gas	118-H-1801	118H1801	16	Best combustion practices. Ultra Low NOx Burner
122	SRU Thermal Oxidizer	Thermal Oxidizer with a rated capacity of 1.58 MMBTU/h	122-H-2201	122H2201	17	Emissions from SRU vents will be routed via a common header to aThermal Oxidizer.
125	Kerosene Hydrotreater	Kerosene HDT heater rated 12.50 MMBTU/h and fired on refinery fuel gas	125-H-2501	125H2501	18	Best combustion practices. Ultra Low NOx Burner
202	Utility Boiler 1	Boiler with a rated capacity of 60 MMBTU	202-B-0201A	202B0201A	19	Under normal operations 2 Boilers in service 1 in hot standby
202	Utility Boiler 2	Boiler with a rated capacity of 60 MMBTU	202-B-0201B	202B0201B	20	
202	Utility Boiler 3	Boiler with a rated capacity of 60 MMBTU	202-B-0201C	202B0201C	21	
203	Crude oil tank #1	Bakken crude oil storage tank #1 with a nominal 110,999 bbl capacity	203-T-0001	203T0001	22	Dome with IFR (Internal Floating Roof) and Submerged Fill Pipe
203	Crude oil tank #2	Bakken crude oil storage tank #2 with a nominal 110,999 bbl capacity	203-T-0002	203T0002	23	Dome with IFR (Internal Floating Roof) and Submerged Fill Pipe
203	Crude oil tank #3	Bakken crude oil storage tank #3 with a nominal 110,999 bbl capacity	203-T-0003	203T0003	24	Dome with IFR (Internal Floating Roof) and Submerged Fill Pipe

Unit Number	Unit Description	Emission Unit Description	TAG	Point ID	Point Number	Air Pollution Control Equipment (inherent to design)
203	Desulfurized Heavy Naphtha tank #1	Heavy Naphtha storage tank #1 with a nominal 64,996 bbl capacity	203-T-0005	203T0005	25	Dome with IFR (Internal Floating Roof) and Submerged Fill Pipe
203	Reformate tank #1	Reformate storage tank #1 with a nominal 33,312 bbl capacity	203-T-0006	203T0006	26	Dome with IFR (Internal Floating Roof) and Submerged Fill Pipe
203	Reformate tank #2	Reformate storage tank #2 with a nominal 33,312 bbl capacity	203-T-0007	203T0007	27	Dome with IFR (Internal Floating Roof) and Submerged Fill Pipe
203	Gasoline tank #1	Regular Gasoline tank #1 with a nominal 64,996 bbl capacity	203-T-0008	203T0008	28	Dome with IFR (Internal Floating Roof) and Submerged Fill Pipe
203	Gasoline tank #2	Regular Gasoline tank #2 with a nominal 64,996 bbl capacity	203-T-0009	203T0009	29	Dome with IFR (Internal Floating Roof) and Submerged Fill Pipe
203	Mid Gasoline tank #1	Mid Gasoline tank #1 with a nominal 64,996 bbl capacity	203-T-0010	203T0010	30	Dome with IFR (Internal Floating Roof) and Submerged Fill Pipe
203	Jet Fuel tank #1	Jet Fuel tank #1 with a nominal 33,312 bbl capacity	203-T-0011	203T0011	31	Dome with IFR (Internal Floating Roof) and Submerged Fill Pipe
203	Jet Fuel tank #2	Jet Fuel tank #2 with a nominal 33,312 bbl capacity	203-T-0012	203T0012	32	Dome with IFR (Internal Floating Roof) and Submerged Fill Pipe

Unit Number	Unit Description	Emission Unit Description	TAG	Point ID	Point Number	Air Pollution Control Equipment (inherent to design)
203	Undesulphurized Diesel tank #1	Undesulphurized Diesel storage tank #1 with a nominal 33,312 bbl capacity	203-T-0013	203T0013	33	Cone Roof, Submerged Fill Pipe
203	Undesulphurized Diesel tank #2	Undesulphurized Diesel storage tank #2 with a nominal 33,312 bbl capacity	203-T-0014	203T0014	34	Cone Roof, Submerged Fill Pipe
203	Desulphurized Diesel tank #1	Desulphurized Diesel storage tank #1 with a nominal 64,996 bbl capacity	203-T-0015	203T0015	35	Cone Roof, Submerged Fill Pipe
203	Desulphurized Diesel tank #2	Desulphurized Diesel storage tank #2 with a nominal 64,996 bbl capacity	203-T-0016	203T0016	36	Cone Roof, Submerged Fill Pipe
203	UVGO tank	UVGO storage tank with a nominal 33,312 bbl capacity	203-T-0017	203T0017	37	Cone Roof, Submerged Fill Pipe
203	FCC Naphtha tank #1	FCC naphtha storage tank #1 with a nominal 33,312 bbl capacity	203-T-0018	203T0018	38	Dome with IFR (Internal Floating Roof) and Submerged Fill Pipe
203	FCC Naphtha tank #2	FCC naphtha storage tank #2 with a nominal 33,312 bbl capacity	203-T-0019	203T0019	39	Dome with IFR (Internal Floating Roof) and Submerged Fill Pipe

Unit Number	Unit Description	Emission Unit Description	TAG	Point ID	Point Number	Air Pollution Control Equipment (inherent to design)
203	Alkylate tank #1	Alkylate storage tank #1 with a nominal 33,312 bbl capacity	203-T-0020	203T0020	40	Dome with IFR (Internal Floating Roof) and Submerged Fill Pipe
203	Alkylate tank #2	Alkylate storage tank #2 with a nominal 33,312 bbl capacity	203-T-0021	203T0021	41	Dome with IFR (Internal Floating Roof) and Submerged Fill Pipe
203	Diluent tank	Diluent tank with a nominal 33,312 bbl capacity	203-T-0022	203T0022	42	Cone Roof, Submerged Fill Pipe
203	Fuel Oil tank #1	Fuel Oil tank #1 with a nominal 64,996 bbl capacity	203-T-0023	203T0023	43	Cone Roof, Submerged Fill Pipe
203	Fuel Oil tank #2	Fuel Oil tank #2 with a nominal 64,996 bbl capacity	203-T-0024	203T0024	44	Cone Roof, Submerged Fill Pipe
203	Light Naphtha tank #1	Light Naphtha tank #1 with a nominal 33,312 bbl capacity	203-T-0031	203T0031	45	Dome with IFR (Internal Floating Roof) and Submerged Fill Pipe
203	Light Naphtha tank #2	Light Naphtha tank #2 with a nominal 33,312 bbl capacity	203-T-0032	203T0032	46	Dome with IFR (Internal Floating Roof) and Submerged Fill Pipe
203	Light Slops tank	Light slops tank with a nominal 2,620 bbl capacity	203-T-0033	203T0033	47	Cone Roof, Submerged Fill Pipe

Unit Number	Unit Description	Emission Unit Description	TAG	Point ID	Point Number	Air Pollution Control Equipment (inherent to design)
203	Heavy Slops tank	Heavy slops tank with a nominal 2,620 bbl capacity	203-T-0034	203T0034	48	Cone Roof, Submerged Fill Pipe
206	Wastewater Treatment Plant	Oil/Separator Inlet from Benzene Waste Operations NESHAP (BWON) Compliant plant with a design capacity of 155,000 gal/d**	-	206WWT	49	Wastewater treatment plant must comply with the design requirements of 40 CFR 60 Subpart QQQ
207	Enclosed HC Operating Flare	Enclosed flare with pilot at 100 SCFH average of fuel gas, for handling up to 24.4 MMSCFD (including purges and fuel gas blowdown)	207-FL-1701	207FL1701	50	High temperature, optimal balance between air flow, gas/pollutant loading and low heating value
207	Acid Flare	Acid gas flare with pilot at 100 SCFH average of fuel gas, for handling up to 15.8 MMSCFD of gas.	207-FL-1702	207FL1702	51	High temperature, optimal balance between air flow, gas/pollutant loading and low heating value
207	HC Emergency Flare #1	HC Emergency Flare at 100 SCFH average of fuel gas, for handling up to 74.6 MMSCFD (including purges and fuel gas blowdown)	207-FL-1703	207FL1703	52	High temperature, optimal balance between air flow, gas/pollutant loading and low heating value

Unit Number	Unit Description	Emission Unit Description	TAG	Point ID	Point Number	Air Pollution Control Equipment (inherent to design)
207	HC Emergency Flare #2	HC Emergency Flare at 100 SCFH average of fuel gas, for handling up to 88.8 MMSCFD (including purges and fuel gas blowdown)	207-FL-1704	207FL1704	53	High temperature, optimal balance between air flow, gas/pollutant loading and low heating value
208	Truck Loading-Unloading System	Dedicated normal service of loading/unloading refinery products (Gasoline, Jet Kerosene, Diesel and Fuel Oil).	-	208TL	54	Submerged Loading and dedicated service.
209	Rail Loading-Unloading System	Dedicated normal service of loading/unloading refinery products (Gasoline, Jet Kerosene, Diesel and Fuel Oil).	-	209RL	55	Submerged Loading and dedicated service
212	Firewater Diesel Pumps	Combustion gases (flue gas) from 600 HP x3 diesel firewater pump.	212-P-1201 A/B/C	212P1201A/B/C	56	Normal operation of less than 100 hours per year. The engines shall be certified to emissions standards as outlined under 40 CFR 60, Subparts IIII and JJJ. The engines shall be manufactured with the appropriate control equipment to meet these emissions standards

Unit Number	Unit Description	Emission Unit Description	TAG	Point ID	Point Number	Air Pollution Control Equipment (inherent to design)
215	Cooling Towers	Induced draft - counter flow Cooling Tower. Design Cooling Water Circulation Rate: 1,500 gpm	215-CT-1501A/B/C	215CT1501A/B/C	57	Drift Eliminators Inherent to Design. Under normal operations 2 in service 1 in standby
					58	
					59	
216	Diesel/Natural gas-fired emergency generator set	Combustion gases (flue gas) from 3.5 MWx3 emergency generator stack.	216-EG-1601 A/B/C	216EG1601 A/B/C	60	Normal operation of less than 100 hours per year. The engines shall be certified to emissions standards as outlined under 40 CFR 60, Subparts IIII and JJJ. The engines shall be manufactured with the appropriate control equipment to meet these emissions standards
FUGITIVE	Process equipment leaks in VOC and Natural Gas service	Fugitive (leaks) emissions from process equipment elements throughout the refinery	-	FUG-1	61	Leak Detection and Repair (LDAR) Program Screen level at 500 ppm

*: An add-on pollution control device such as ESP, filtering media or wet/dry scrubber are being considered for this unit. Further discussion is in the Controls Technology Review Report.

**: Calculated based on waste water treatment plant design.

.

4.2. Emission Estimation – Basis and Assumptions

Emissions for criteria pollutants and HAPs were estimated using the Emission Factors presented in the EPA *Emissions Estimation Protocol for Petroleum Refineries* and engineering data, unless noted otherwise. When needed, EPA AP-42 *Compilation of Air Pollutant Emission Factors. Volume 1: Stationary Point and Area Sources*, Fifth Edition, was consulted for specific criteria pollutant emission factors.

When using the mentioned emission factors, the following basis and assumptions were considered:

- Since this is a new refinery, and site-specific measurement or test data are not available, default emission factors (Methodology Ranks 5, or 4, as applicable) were used to estimate criteria pollutant and HAPs emissions, unless noted otherwise. For new industrial sources with no actual monitoring or direct measurements, the methodology ranks above mentioned were used since they are based on typical refinery average stream concentrations and statistical default process compositions. Also, when available, actual engineering/licensor data or vendor guarantees were used.

- When normalized emission factors for feed or throughput were used to determine PTE, maximum design capacity for applicable units/equipment was considered.

- For continuous operation process units, 8,760 hr/yr operating hours per year was considered to obtain annual mass emissions (tons per year or tpy). Depending on specific equipment, such as venting from regeneration units, these operating hours would in practice be less, in accordance with the process operation philosophy.

- For fugitive dust emissions from vehicular traffic, the base case is paving high traffic areas including employee parking areas and truck loading facilities. Actual emissions may be lower, since crude and/or products may be imported/dispatched via pipeline in the future.

Figure 1: Identification of emission sources per main process units

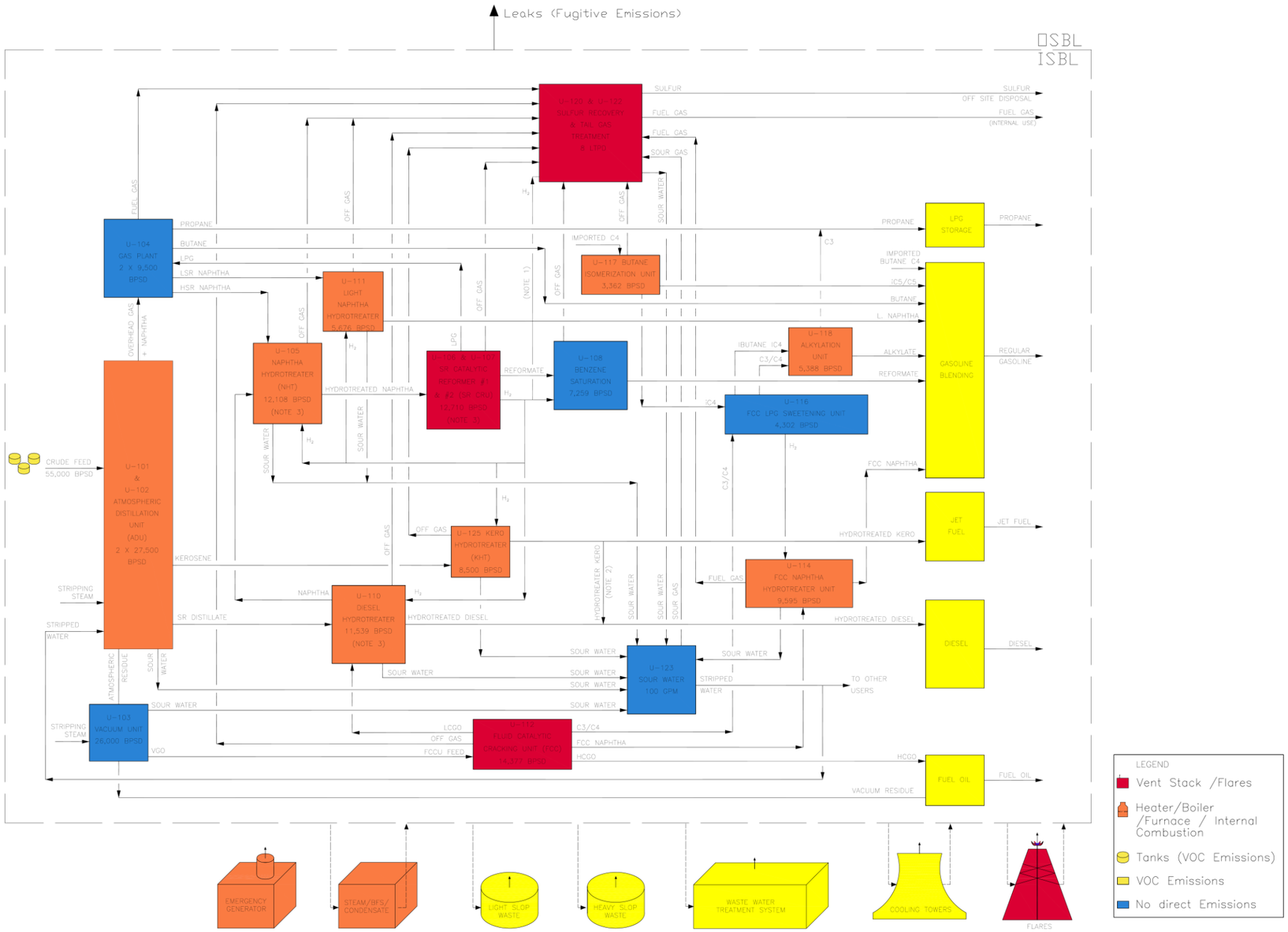

5. CALCULATION BASIS

This section describes de basis of the calculations made to estimate the emissions of pollutants from each main unit and equipment identified in section 4.1 of this document.

5.1. Equipment Leaks

Equipment leaks are small fugitive emissions that occur throughout the refinery from a broad variety of equipment components and connections that may develop leaks through normal wear and tear which allow volatile fluids to escape into the atmosphere.

To estimate VOCs and HAPs leak emissions, Methodology Rank 2 and 4 were used, based in default model process component counts. Equipment counts for large model processes (more than 50,000 BPSD) were selected from Table 2-5 *Median Equipment Leak Component Counts for Large Model Processes*,

For the base case emissions inventory a 10,000 ppmv leak definition, which is the highest detection threshold allowed by New Source Performance Standards (NSPS), was utilized to determine emission factors. Emission Factors were obtained from AP-42 *Table 2-6. Refinery and SOCMI Average Component Emission Factors (Rank 4)*. Emissions reductions from implementing a Leak Detection and Repair (LDAR) program with a monthly monitoring interval at a 10,000 ppmv leak definition rate were taken from Table 4.1 – *Control effectiveness for an LDAR program at a chemical process unit and a refinery* – in EPA's Publication EPA-305-D-07-001, "*Leak Detection and Repair, A Best Practices Guide".*

However, in order to demonstrate compliance with 40 CFR 60 Subpart GGGa, applicable portions of Subpart VVa, and compliance with 40 CFR 61 Subparts J and V, Meridian has chosen to adopt a 500 ppmv leak definition which is the current EPA recommended value for implementation of monitoring rather than the previous regulatory level of 10,000 for NSPS. In addition, to minimize leaks, the design of the refinery will include pumps in VOC service with double mechanical seals, enhanced valve packing, no open ended lines and connection of pressure relief devices, sampling connecting systems, surge control vessels and bottoms receivers to closed-vent systems routed to fuel gas or flare. Meridian's facility integrity management system for the Davis Refinery will also include the use of advanced monitoring methods such as differential light absorption and ranging (DIAL) or optical gas imaging (OGI) technology that can visualize gas leaks using ultra-sensitive passive infrared sensing technology, as part of, and complementing, its proposed LDAR program to improve operational and safety practices so that leaks can be identified more efficiently and fixed soon as practicable.

Meridian's proposed LDAR program assumes monitoring and directed maintenance with a leak definition of 500 ppmv for all components other than compressors which are to be screened at 10,000 ppmv. To estimate potential fugitive emissions from refinery equipment leaks, Emission Factors were obtained from AP-42 *Table 2-2. Equipment Leak Rate for Petroleum and SOCMI Equipment Components (Rank 2)*. Emissions reductions from implementing an LDAR program equivalent to Texas Commission on Environmental Quality (TCEQ) approved 28LAER program have been considered in the controlled emissions inventory. Results of this estimation is summarized in Appendix 2.

5.2. Storage Tanks Emissions

For Storage Tank VOC Emission Estimates a Methodology Rank 2 *Tank-specific modeling* with EPA Tanks 4.09d software was used for all petroleum liquid storage tanks in the refinery, based on available engineering information such as tank type, tank dimensions, stored liquid properties, tank condition/fitting information, annual throughput. Results of this modeling for VOCs are shown in Appendix 2.

For Storage Tank HAPs Emission Estimates, a Methodology Rank 3b *Default Tank Modeling* was used, which is applicable to common petroleum liquid storage tanks, and requires Crude throughput and production capacities. These default emissions factors consider assumptions regarding the typical fitting controls and the average composition of crude oil, gasoline, and other products at the refinery. Emission factors for VOCs were used from Table 3-3 *Default Emissions Factors for Petroleum Refinery Storage Tanks* of the protocol, based on crude oil processing capacity and production of various distillates, as noted in Appendix 2.

These factors consider an estimation of distillates production as a fraction of crude oil processing capacity, subtracting the production of heavy distillates and aromatics. In the emissions inventory for the proposed Davis Refinery, such production was assumed zero since the heaviest product will be fuel oil which is considered part of the middle distillates pool. The HAP emissions were assumed then from:

- Gasoline and Other Light Distillates (such as desulfurized naphtha, alkylates, reformates, butane) at 60% of the crude oil processing rate, and,

- Diesel Fuel and Other Middle Distillates (diesel, kerosenes, jet fuel, fuel oil), at 40% of crude oil processing rate.

5.3. Stationary Combustion Sources

Combustion sources such as heaters and boilers of the proposed Davis Refinery will For the base case emissions inventory for criteria pollutants, AP-42 emission factors based on heat input in MMBTU/hr were taken from Chapter 1 of the *Compilation of Air Pollutant Emission Factors. Volume 1: Stationary Point and Area Sources* (*External*

Combustion Sources, *Tables 1.4-1 and 1.4-2*). Manufacturer guaranteed emission rates for particulate matter (PM), nitrogen oxides (NOx), and carbon monoxide (CO) were utilized to obtain the emissions inventory process for process heaters and utility boilers. For emission estimates of SO_2 and VOC default AP-42 emission values were utilized. For the controlled emissions inventory a reduction on emissions were applied based on the add-on controls selected.

HAPs emissions for process heaters and boilers were calculated based on fuel usage using Methodology Rank 4 and default emission factors in Table 4-3 *Summary of Emission Factors for Boilers and Process Heaters Firing Various Fuels*.

In the case of criteria pollutants and HAPs from internal combustion engines, such as the emergency generator and firewater pump engines, emission factors based on power output (HP) and fuel input (MMBTUh) were taken from AP-42 Chapter 3 Section 3.4. *Large Stationary Diesel And All Stationary Dual-fuel Engines, Table 3.4-1 to 3.4-3*). It should be noted that these emissions were not added to the total refinery emissions as it is expected that these emergency engines will not operate under normal conditions for more than 100 hours per year.

Emission factors and emission estimations for stationary combustion equipment (heaters and boilers) are presented in Appendix 3.

5.4. Process Vents

Emissions from process vents are those that can be released directly to the atmosphere through a vent stack. .At the proposed Davis Refinery most of the process gases will be routed to the refinery's fuel gas system. Those not routed to the refinery's fuel system will be controlled using a flare, thermal incinerator, or other air pollution control technique. Process vent emissions from the proposed Davis Refinery that are not recovered into the refinery's fuel gas system are described in this section.

5.4.1. Fluid Catalytic Cracking Unit (FCCU)

Emissions from the FCCU catalyst regenerator vent are often the single largest emissions vent at the refinery. These emissions include a variety of pollutants, such as PM (primary, filterable and condensable), SO_2, NOx, CO, VOC, metal HAPs, organic HAPs, and ammonia.

Criteria pollutant emissions for the base case were based on FCCU fresh feed rate using AP-42 Emission Factors, *Volume 1: Stationary Point and Area Sources* (*Petroleum Industry Table 5.1-1*). For the controlled emissions inventory the FCCU technology licensor provided CO and SO_2 emission rates to replace default values based on its licensed technology design for Bakken crude coke and hot burn regenerator. Tables and Results of these calculations are presented in Appendix 4.

For PM emissions including PM size distribution estimates, default values based on the FCCU coke-burn off rate were used, following the procedure for PM Emissions Inventory Calculations indicated in the protocol. Likewise, emission estimates for metal HAPs were based on Nickel E-Cat typical value for FCC units (Methodology Rank 5A).

For HAPs (volatile, semi-volatile, non-volatile organics), dioxins, furans, inorganics and other pollutants of interest, the emission factors from Table 5-4. *Organic HAP Emissions Factors for CCU Catalyst Regenerator Vent,* based on FCCU feed (Methodology Rank 5B for Catalytic Cracking Units).

5.4.2. Catalytic Reforming Units

Emissions from the Catalytic Reforming Units # 1 & 2 process vents are discharged while purging in the regeneration cycle. For CRU semi-regenerative design as is porposed for the Davis Refinery, these emissions are generated for a maximum 672 hr/yr for each reactor at each unit.

To estimate emissions from catalyst regeneration, based on catalytic reforming unit process capacity, Methodology Rank 5 and AP-42 Default Emission Factors for VOCs, organic HAPs, dioxins, PCBs, inorganics and other pollutants of interest were taken from Table 5-6 *Emissions Factors for CRU Catalyst Regeneration Vent*. Results are summarized in Appendix 4.

5.4.3. Sulfur Recovery Unit (SRU)

The sulfur recovery plant of the Davis Refinery will be based on Merichem's LO-CAT® licensed technology. This patented liquid-redox system uses a proprietary chelated iron solution catalyst to convert H_2S to innocuous, elemental sulfur slurry inside an oxidizer vessel. The slurry passes through a sulfur filter to produce an elemental sulfur cake which is loaded onto trucks for offsite reuse or disposal. No hazardous waste byproducts are produced. The environmentally safe catalyst is continuously regenerated in the process. The LO-CAT process allows 100% turndown in gas flow and H_2S concentrations and has an H_2S Removal efficiency of 99.9 %. The process vents of the LO-CAT unit; an oxidizer vent and a flash drum vent, will be routed to a thermal oxidizer for the 99.9% destruction (oxidation) of any unconverted sulphur and residual organic volatiles.

Calculations for the emissions associated with SRU - Thermal Oxidizer were performed on the basis of engineering data provided by the licensor of the LO-CAT unit. These calculations are summarized in Appendix 4.

5.4.4. Blowdown System

Blowdown systems are used during depressurization processes to recover liquids entrained in a process gas stream. The remaining uncondensed gases may be compressed and recovered for use as fuel gas or they may be vented to a thermal destruction device (thermal oxidizer or flare). Either of these scenarios is considered a "controlled" blowdown system. The design of the proposed Davis Refinery includes a vapor recovery system to capture vapors released by pressure control valves during normal operations and return to product/processes instead of releasing through stacks or via flaring.

To estimate yearly emissions from blowdown scenarios for the proposed Davis Refinery, the total refinery Fuel Gas production was considered as being routed to the Flare system for no more than 168 hours a year. Emissions estimations were performed based on the total refinery capacity using the AP-42 emission factors presented in *Table 5-12. Default Emissions Factors for Blowdown Systems*. These results are presented in Appendix 4.

5.4.5. Vacuum Producing Systems

VOC emissions from the Vacuum Distillation Unit, are generated from the ejectors and condensers system. The design of the Vacuum Distilation Unit at the Davis Refinery considers recovery of uncondensed gases into the refinery's fuel gas system. Therefore, there are no emissions associated to process vents from the vacuum distillation unit at the proposed Davis Refinery.

5.5. Flares

Emissions from flares consist of a fraction of the hydrocarbons in the flare gas (e.g., CH_4, CO, VOC, and specific organic HAP) that are not combusted in the flare; SO_2 resulting from the oxidation of sulfur compound impurities, such as H_2S, in the gas stream; and CO_2 from the combustion process. Flares are also expected to produce NO_x emissions and may produce PM (soot) if combustion conditions are not adequate.

To safely combust hydrocarbon relief flows during process upsets, and other times as needed during startups, shutdowns, or malfunctions the refinery will have a flare system comprised of a combination of an enclosed flare and elevated flares. A separate system with an elevated flare to handle acid gases in cases of SRU unavailability will be provided.

The proposed Davis Refinery will include four (4) flares; one main enclosed flare for normal operation, one acid gas flare and two elevated emergency flares. The enclosed flare is being designed to receive the streams of excess gas expected to be produced during purge and blowdown beyond the capacity of the refinery's vapor recovery system. The elevated flares will only operate during emergency cases in

which the capacity of the enclosed flare is exceeded. Blowdown cases emission estimates are captured under Blowdown System in Section 5.4.4 and Appendix 4.

Flaring at the proposed Davis Refinery will be on an intermittent and as-needed basis, since the refinery will operate a vapor recovery system to capture vapors and return to product/processes instead of releasing through stacks or via flaring during normal operations. Therefore, emissions estimates were calculated using Methodologies Ranks 5 and 6 based flare pilots capacity and the Lower Heating Value (LHV) of the gas stream routed to the pilots. AP-42 *Table 6-4. Flare General Emission Factors* were used to estimate HAP emissions associated to the normal operation of the flares. The AP-42 emission factors of *Table 6-2. Flare Energy Consumption-Based Emission Factors* and *Table 6-3. Emission Factors for Soot from Flares* were used to calculate emissions of VOCs, CO, NO_x and Soot (PM) based on the LHV of the gas stream being flared through the pilots under normal operations. Tables and Results of these calculations are presented in Appendix 5.

5.6. Wastewater Treatment Systems

Methodology Rank 3 was utilized to estimate the VOC emissions associated to the WWTS. The mass flow through the WWTS was estimated based on the average throughput of Davis Refinery main units, using the emissions factors from *Table 7-8. Model Process Unit Characteristics for Petroleum Refinery Wastewater* and *Table 7-9. Refinery Wastewater Contaminant Concentrations as a Ratio to Benzene* since the WWTS for the proposed Davis Refinery will be a Benzene Waste Operations NESHAP (BWON) Compliant plant. The estimation of the uncontrolled amount of the compounds emitted was calculated using AP-42 emission factors in *Table 7-10. Default Mass Emission Factors for Refinery Wastewater Collection and Treatment Systems,* the controlled estimate included a percentage of control as expected for a BWON compliant plant. The results of these calculations are presented in Appendix 6.

5.7. Cooling Towers

The main emissions from cooling towers are VOC and particulate matter, which are picked up by cooling water when leaks occur in heat exchangers or condensers (product on the high-pressure side, leaks through cracks in the exchanger and contaminants the water).

The base case emission inventory calculations for the Cooling Towers were based on Cooling Water Circulation Rate, a default drift factor and AP-42 emission factors of *Table 8-5. Methodology Rank 5 Default Emission Factors.* Controlled emissions were estimated based on the proposed Davis Refinery cooling towers which are induced mechanical draft type with counter flow arrangement and drift eliminators (0.005% drift rate) built into the media. Results of these estimations are presented in Appendix 7.

5.8. Product Loading

During loading and unloading operations of feedstock and products from tank trucks and rail tank cars, vapors from the material previously transported and vapors from the material being loaded, are displaced and consequently emitted if left uncontrolled. HAPs and VOCs are the main gases to be emitted from loading operations.

Based on the type of product and loading/unloading rates of the Davis Refinery (Crude Oil, Gasoline, Jet Kerosene, Diesel and Fuel Oil), the potential uncontrolled emissions were calculated using the AP-42 emission factors of *Table 5.2-5 Total Uncontrolled Organic Emission Factors for Petroleum Liquid Rail Tank Cars and Tank Trucks*, from Chapter 5 of the AP-42 *Compilation of Air Pollutant Emission Factors. Volume 1, Chapter 5: Transportation And Marketing Of Petroleum Liquids.*

Controlled emissions were estimated considering that the loading/unloading facilities will be designed with vapor recovery to product recycle with upsets routed to emergency flares, since the proposed Davis Refinery must comply with the provisions of 40 CFR 63 Subpart BBBBBB. These results are presented in Appendix 8.

5.9. Fugitive Dust

Fugitive dust from the proposed Davis Refinery comprises silt suspension from vehicular traffic, and particulate matter from catalyst handling at the FCC unit. Results for these estimations are shown in Appendix 9.

Emissions from vehicular traffic at the proposed Davis Refinery were estimated using expected truck traffic at loading facilities and employee vehicular traffic following AP-42 guidelines, and utilizing the silt loading factor for limited access roads in Chapter 13 of the AP-42 *Compilation of Air Pollutant Emission Factors. Volume 1, Chapter 13: Miscellaneous Sources. Section 13.2.1: Paved Roads*. Primary control is paving of areas of routine vehicle traffic, and speed controls to limit vehicle speeds to less than 15 mph.

Regarding emissions from FCCU catalyst handling were estimated based on experience and best practices for these operations and considering catalyst to flow from the control device hopper and deliver it to enclosed bins for storage pending off-site disposal. The particulate matter generated by the displacement of air within the bin as it fills is controlled by a filter bag (sock).

6. BASE CASE EMISSIONS INVENTORY

In the base case emissions inventory, emission factors that consider air pollution control systems were used, as applicable, only when these controls were inherent part of the equipment design (i.e. Ultra Low NOx Burners, IFR tank design, etc.). A summary of the base case emissions inventory for the proposed Davis Refinery is presented in Table 2.

Table 2: Base Case Emissions Inventory Summary for Davis Refinery

	Criteria Pollutants										HAPs
Emissions Unit	CO	Pb	PM<10	Filerable PM <10	PM <2.5	Filterable PM <2.5	Condensable PM	NO_X (as NO_2)	SO_2	VOC	Total HAPs
Leaks	0.00	0.00	0.00	0.00	0.00	0.00	0.00	0.00	0.00	243.72	40.35
Tanks	0.00	0.00	0.00	0.00	0.00	0.00	0.00	0.00	0.00	21.79	14.95
Stationary Combustion Sources	91.42	1.60E-03	13.06	3.26	13.06	3.26	9.79	97.95	1.92	17.61	6.41
Fluid Catalytic Cracking Unit	0.00	2.03E-03	50.14	33.16	45.65	28.67	16.98	186.28	664.88	577.20	5.39
Catalytic Reforming Unit	0.00	0.00	0.00	0.00	0.00	0.00	0.00	0.00	0.00	0.04	0.79
Sulfur Recovery Plant	2.15	0.00	0.00	0.00	0.00	0.00	0.00	0.47	0.20	1.50	0.00
Vacuum Systems	0.00	0.00	0.00	0.00	0.00	0.00	0.00	0.00	0.00	0.00	0.00
Blowdown System	0.83	0.00	0.01	0.01	0.01	0.01	0.00	3.66	5.20	0.15	0.00
Flares	0.25	4.38E-06	0.04	0.01	0.04	0.01	0.03	0.27	0.005	0.05	0.00
Wastewater	0.00	0.00	0.00	0.00	0.00	0.00	0.00	0.00	0.00	210.41	23.28
Cooling Towers	0.00	0.00	24.83	0.00	0.00	0.00	0.00	0.00	0.00	4.73	0.00
Rail Product Loading	0.00	0.00	0.00	0.00	0.00	0.00	0.00	0.00	0.00	1,713.49	0.00
Truck Product Loading	0.00	0.00	0.00	0.00	0.00	0.00	0.00	0.00	0.00	366.76	0.00
Fugitive Dust	0.00	0.00	1.33	0.00	0.00	0.00	0.00	0.00	0.00	0.00	0.00
Total (STPY)	**94.65**	**0.004**	**89.40**	**36.44**	**58.75**	**31.95**	**26.80**	**288.62**	**672.20**	**3,157.45**	**91.17**

7. PROPOSED DAVIS REFINERY POTENTIAL TO EMIT

A Controls Technology Review was conducted as part of determining the proposed Davis Refinery "Potential to Emit", as defined in North Dakota's Air Pollution Control Rules (NDAC 33-15-14-06).

This review generally followed Best Available Control Technology (BACT) methods for identification of proposed controls and included a pollutant-by-pollutant analysis of technically feasible available control technologies that can be implemented for each emission unit. Based on the estimated controlled emissions for the facility, the source qualifies as a synthetic minor source under North Dakota Air Quality regulations, and therefore, a formal BACT analysis was not completed. The results of the Controls Technology Review is detailed in Exhibit C of the Permit Application, and a summary of the selected controls is listed in Table 3 below.

The proposed Davis Refinery "Potential to Emit", under its physical and operational design and including the effect of add-on pollution control equipment, was calculated utilizing the same methodologies as in the "Base Case" or "uncontrolled" Emissions Inventory, this time applying the reduction efficiencies of the selected add-on control technologies. Table 4 summarizes the "Potential to Emit" of the proposed Davis Refinery.

Table 3: Summary of Proposed Control Technology for the Davis Refinery

Source/Unit	Target Pollutant	Pollution Control Technologies Used	Assumed % Control
Leaks (Fugitive Emissions)	VOC	LDAR (Leak, Detection and Repair) program with 500 ppmv leak definition, and including differential light absorption and ranging (DIAL) or optical gas imaging (OGI) technology	97% valves, 93% pumps, 97% flanges, 97% sample points, (30% heavies). Program baseline/ screen value of 500 ppm
Tanks	VOC	Double Seal and Wipers on IFR Tanks (NESHAP std). Vapor Recovery to product recycle on select fixed roof tanks	95%
Stationary Combustion Sources (Heater and Boilers)	CO NOx VOC/HAPs PM SO2	CO – Best Comb. Practices w/ Ultra Low NOx Burners NOx – SCR's w/ Ultra Low NOx Burners VOC / HAPs – Best Comb. Practices with Ultra Low NOx Burners PM – Venturi Scrubbers on larger heaters	CO – 96% NOx – 75% VOCs / HAPs – 75%
FCC Regeneration Vent	CO NOx SO2	CO– Best Comb. Practices / complete carbon burn regenerator design NOx – COP-NP Combustion Promotor OR Tri-Mer SO2 – Wet Scrubber OR Dri-Sorb Catalyst	CO – 100% NOx – 98% SO_2 – 99%
Catalytic Reforming Unit	HAPs	NA – minor emissions levels	NA
Sulfur Recovery Plants	SO_2	Lo-CAT with tail gas treatment (thermal oxidizer) Other pollutants are considered minor	SO_2 - 99.9%
Blowdown System	CO NOx SO_2	Vapor recovery to product capture and emergency flaring only for upsets	99.8%
Flares	CO NOx VOC HAPs	Lower heating value of feed gases, requirements specified by EPA and NDDoH regulations. Flares will only be used during upset conditions.	98% +
Wastewater Treatment System	VOC/HAPs	Covered API/CPI oil/water separators and induced/dissolved air flotation units. Equalization tanks instead of open ponds. Vapor Recovery System	VOC – 95% HAPs – 55%
Cooling Towers	PM VOC	PM10 – drift eliminators VOC – periodic monitoring of flows for VOC's hydrocarbons	Controls are inherent in design for cooling tower for PM10 and are part water level monitoring for VOCs
Product Loading	VOC	Vapor recovery to product recycle with upsets to emergency flares	98%
Fugitive (on-site vehicular) emissions	PM	Paving of areas of routine vehicle traffic. Maintain vehicle speeds to < 15 mph	$PM_{2.5}$ - 0.00054 lb/vmt PM_{10} - 0.0022 lb/vmt Silt load = 2.15E-02
Spent Catalyst	PM	De-minimus	NA – de-minimus

Taken from report N° P-5715043-01-001-18035-I001. EMISSIONS INVENTORY – CONTROLS TECHNOLOGY REVIEW FOR DAVIS REFINERY. VEPICA, 2016.

Table 4: Summary of proposed Davis Refinery "Potential to Emit"

	Criteria Pollutants										HAPs
Emissions Unit	CO	Pb	PM<10	Filerable PM <10	PM <2.5	Filterable PM <2.5	Condensable PM	NO_X (as NO_2)	SO_2	VOC	Total HAPs
Leaks	0.00	0.00	0.00	0.00	0.00	0.00	0.00	0.00	0.00	21.06	2.39
Tanks	0.00	0.00	0.00	0.00	0.00	0.00	0.00	0.00	0.00	9.17	4.48
Stationary Combustion Sources	91.42	1.60E-03	8.00	2.00	8.00	2.00	6.00	46.40	1.92	17.61	1.62
Fluid Catalytic Cracking Unit	0.00	2.03E-05	1.00	0.66	0.91	0.57	0.34	3.73	6.65	5.77	0.87
Catalytic Reforming Unit	0.00	0.00	0.00	0.00	0.00	0.00	0.00	0.00	0.00	0.04	0.79
Sulfur Recovery Plant	2.15	0.00	0.00	0.00	0.00	0.00	0.00	0.47	0.20	1.50	0.00
Vacuum Systems	0.00	0.00	0.00	0.00	0.00	0.00	0.00	0.00	0.00	0.00	0.00
Blowdown System	0.83	0.00	0.01	0.01	0.01	0.01	0.00	3.66	5.20	0.15	0.00
Flares	0.25	4.38E-06	0.04	0.01	0.04	0.01	0.03	0.27	0.005	0.05	0.00
Wastewater	0.00	0.00	0.00	0.00	0.00	0.00	0.00	0.00	0.00	10.52	0.52
Cooling Towers	0.00	0.00	1.86	0.00	0.00	0.00	0.00	0.00	0.00	0.35	0.00
Rail Product Loading	0.00	0.00	0.00	0.00	0.00	0.00	0.00	0.00	0.00	2.81	0.00
Truck Product Loading	0.00	0.00	0.00	0.00	0.00	0.00	0.00	0.00	0.00	0.73	0.00
Fugitive Dust	0.00	0.00	1.33	0.00	5.65E-04	0.00	0.00	0.00	0.00	0.00	0.00
Total (STPY)	**94.65**	**1.62E-03**	**12.24**	**2.68**	**8.96**	**2.59**	**6.37**	**54.53**	**13.97**	**69.78**	**10.67**

8. REFERENCES

- Vendor information, Engineering Documentation and Process calculations from VEPICA.
- Letcher, T.; Vallero, D. 2011. Waste: A Handbook for Management. Academic Press.
- RTI International, 2015. Emissions Estimation Protocol for Petroleum Refineries, Version 3. April 2015. Submitted to U.S. EPA Office of Air Quality Planning and Standards
- U.S. EPA (Environmental Protection Agency). 1995a. Compilation of Air Pollutant Emission Factors. Volume 1: Stationary Point and Area Sources. AP-42, Fifth Edition. Office of Air Quality Planning and Standards, Research Triangle Park, NC.

9. APPENDIXES

APPENDIX 1: Results for Equipment Leaks

APPENDIX 2: Results for Storage Tanks

APPENDIX 3: Results for Stationary Combustion

APPENDIX 4: Results for Process Vents

APPENDIX 5: Results for Flares

APPENDIX 6: Results for Wastewater Treatment Systems

APPENDIX 7: Results for Cooling Towers

APPENDIX 8: Results for Product Loading

APPENDIX 9: Results for Fugitive Dust

APPENDIX 1: Results for Equipment Leaks

Table A1-1 - Number of Equipment per Unit (Average for a large refinery) [(a)]

		Number of Equipments (Average for a large refinery)								
	Median Equipments Leak Components Count*	Crude Distillation	Alkylation	Catalytic reforming	Hydrotreating/ hydrorefining	Catalytic cracking	Product blending	Sulfur plant	Vacuum distillation	Isomerization
Valves	Gas	204	192	310	224	277	75	100	229	164
	Light Liquid	440	597	383	253	282	419	125	108	300
	Heavy Liquid	498	0	84	200	445	186	110	447	78
Pumps	Light Liquid	15	21	12	7	12	10	8	2	9
	Heavy Liquid	14	0	2	6	12	10	3	12	5
	Compressors	2	2	3	2	2	2	1	1	2
Pressure Relief Valves	Gas	7	13	8	9	11	9	4	5	15
Flanges	Gas	549	491	653	439	593	227	280	473	300
	Light Liquid	982	1,328	842	581	747	664	460	136	540
	Heavy Liquid	1,046	600	132	481	890	473	179	1,072	265
	Open-Ended Lines	75	35	48	49	59	24	22	0	36
	Sampling Connections	9	6	9	8	15	8	7	7	7

[(a)] Adapted from Table 2-5 *Median Equipment Leak Component Counts for Large Model Processes* of Emissions Estimation Protocol for Petroleum Refineries, Version 3 (RTI, 2015).

Table A1-2 – Controlled Emissions from Leaking Equipment

		LDAR Program*	Emission Factor Definition**			Controlled Leak Emissions (VOC) in lb/h								
	Median Equipment Leak Components Count*	Yes	Screening Value (ppmv)	Emission Factor (Kg/h)***	Emission Factor (lb/h)***	Crude Distillation	Alkylation	Catalytic reforming	Hydrotreating/ hydrorefining	Catalytic cracking	Product blending	Sulfur plant	Vacuum distillation	Isomerization
Valves	Gas	97%	500	2.36E-04	5.21E-04	3.19E-03	3.00E-03	4.85E-03	3.50E-03	4.33E-03	1.17E-03	1.56E-03	3.58E-03	2.56E-03
	Light Liquid	97%	500	2.36E-04	5.21E-04	6.88E-03	9.33E-03	5.99E-03	3.95E-03	4.41E-03	6.55E-03	1.95E-03	1.69E-03	4.69E-03
	Heavy Liquid	0%	500	2.36E-04	5.21E-04	2.59E-01	0.00E+00	4.38E-02	1.04E-01	2.32E-01	9.69E-02	5.73E-02	2.33E-01	4.06E-02
Pumps	Light Liquid	85%	500	2.23E-03	4.92E-03	1.11E-02	1.55E-02	8.85E-03	5.16E-03	8.85E-03	7.37E-03	5.90E-03	1.47E-03	6.64E-03
	Heavy Liquid	85%	500	2.23E-03	4.92E-03	1.03E-02	0.00E+00	1.47E-03	4.42E-03	8.85E-03	7.37E-03	2.21E-03	8.85E-03	3.69E-03
	Compressors	85%	10,000	7.30E-02	1.61E-01	4.83E-02	4.83E-02	7.25E-02	4.83E-02	4.83E-02	4.83E-02	2.42E-02	2.42E-02	4.83E-02
Pressure Relief Valves	Gas	97%	500	2.36E-04	5.21E-04	1.09E-04	2.03E-04	1.25E-04	1.41E-04	1.72E-04	1.41E-04	6.25E-05	7.82E-05	2.34E-04
Flanges	Gas	97%	500	3.64E-04	8.03E-04	1.32E-02	1.18E-02	1.57E-02	1.06E-02	1.43E-02	5.47E-03	6.74E-03	1.14E-02	7.23E-03
	Light Liquid	97%	500	3.64E-04	8.03E-04	2.37E-02	3.20E-02	2.03E-02	1.40E-02	1.80E-02	1.60E-02	1.11E-02	3.28E-03	1.30E-02
	Heavy Liquid	30%	500	3.64E-04	8.03E-04	5.88E-01	3.37E-01	7.42E-02	2.70E-01	5.00E-01	2.66E-01	1.01E-01	6.03E-01	1.49E-01
	Open-Ended Lines	97%	0	0.00E+00	0.00E+00	0.00E+00	0.00E+00	0.00E+00	0.00E+00	0.00E+00	0.00E+00	0.00E+00	0.00E+00	0.00E+00
	Sampling Connections	97%	500	5.29E-04	1.17E-03	3.15E-04	2.10E-04	3.15E-04	2.80E-04	5.25E-04	2.80E-04	2.45E-04	2.45E-04	2.45E-04
				Total (lb/h)		0.96	0.46	0.25	0.46	0.84	0.46	0.21	0.89	0.28
				Total Controlled (STPY)		4.22	2.00	1.09	2.04	3.68	1.99	0.93	3.90	1.21
				Total Controlled (STPY)		**21.06**	Total VOC Controlled TPY							
				Total Controlled (lb/h)		**4.81**	Total VOC Controlled (lb/h)							

*LDAR program efficiency in reducing fugitive emissions equivalent to those achievable under the TCEQ 28LAER. LDAR assumes automated monitoring/directed maintenance
Average Efficiency 73%
**Table 2-2. Equipment Leak Rate for Petroleum and SOCMI Equipment Components. of Emissions Estimation Protocol for Petroleum Refineries, Version 3 (RTI, 2015)
*** Emission factors used (correlation), based in a threshold of 500 ppmv for leak detection, with automated corrective action, and pegged emission factor for 10,000 ppm SV....

Table A1-2 – Controlled Speciated VOC HAPs Emissions from Leaking Equipment

	Average Weight Percent of Compound in Process Unit Streams[1]								
HAPs	Crude Distillation	Alkylation	Catalytic reforming	Hydrotreating/ hydrorefining	Catalytic cracking	Product blending	Sulfur plant	Vacuum distillation	Isomerization
1,3-Butadiene	0.01	0.22	0.009		0.012				
n-Hexane	4.3	1.6	2.8	1.9	1.0			0.01	3.2
2,2,4-Trimethyl pentane	0.05	25	0.25		0.3			0.003	0.01
Benzene	0.9	0.03	6.3	0.37	1.0			0.003	0.5
Toluene	1.7	2.0	17.4	1.7	3.3			0.04	0.6
Xylenes (total)	2.0	0.08	17.6	1.9	4.9			0.04	0.15
Ethylbenzene	0.63		3.9	0.37	1.1			0.02	
Cumene	0.12		0.42	0.07	0.10				
1,2,4-trimethyl benzene	0.63		5.9	0.4	1.9			0.02	
Naphthalene	0.25		0.87	0.25	0.72			0.12	
Biphenyl	0.06			0.22	0.43			0.09	

1 - Table 2-7. Concentration of HAP in Refinery Process Unit Streams, Emissions Estimation Protocol for Petroleum Refineries, Version 3, RTI International.

Table A1-2 – Controlled Speciated VOC HAPs Emissions from Leaking Equipment (Cont.)

	Controlled Leak Emissions (HAP) in STPY									
HAPs	Crude Distillation	Alkylation	Catalytic reforming	Hydrotreat/ hydrorefining	Catalytic cracking	Product blending	Sulfur plant	Vacuum distillation	Isomerization	Total HAPs Controlled (STPY)
1,3-Butadiene	4.22E-04	4.41E-03	9.78E-05	0.00E+00	4.41E-04	0.00E+00	0.00E+00	0.00E+00	0.00E+00	5.37E-03
n-Hexane	1.82E-01	3.21E-02	3.04E-02	3.87E-02	3.68E-02	0.00E+00	0.00E+00	3.90E-04	3.87E-02	3.59E-01
2,2,4-Trimethyl pentane	2.11E-03	5.01E-01	2.72E-03	0.00E+00	1.10E-02	0.00E+00	0.00E+00	1.17E-04	1.21E-04	5.17E-01
Benzene	3.80E-02	6.01E-04	6.84E-02	7.53E-03	3.68E-02	0.00E+00	0.00E+00	1.17E-04	6.05E-03	1.58E-01
Toluene	7.18E-02	4.01E-02	1.89E-01	3.46E-02	1.21E-01	0.00E+00	0.00E+00	1.56E-03	7.26E-03	4.66E-01
Xylenes (total)	8.45E-02	1.60E-03	1.91E-01	3.87E-02	1.80E-01	0.00E+00	0.00E+00	1.56E-03	1.81E-03	5.00E-01
Ethylbenzene	2.66E-02	0.00E+00	4.24E-02	7.53E-03	4.05E-02	0.00E+00	0.00E+00	7.80E-04	0.00E+00	1.18E-01
Cumene	5.07E-03	0.00E+00	4.56E-03	1.43E-03	3.68E-03	0.00E+00	0.00E+00	0.00E+00	0.00E+00	1.47E-02
1,2,4-trimethyl benzene	2.66E-02	0.00E+00	6.41E-02	8.15E-03	6.99E-02	0.00E+00	0.00E+00	7.80E-04	0.00E+00	1.70E-01
Naphthalene	1.06E-02	0.00E+00	9.45E-03	5.09E-03	2.65E-02	0.00E+00	0.00E+00	4.68E-03	0.00E+00	5.63E-02
Biphenyl	2.53E-03	0.00E+00	0.00E+00	4.48E-03	1.58E-02	0.00E+00	0.00E+00	3.51E-03	0.00E+00	2.63E-02
	0.45	0.58	0.60	0.15	0.54	0.00	0.00	0.01	0.05	**2.39**

APPENDIX 2: Results for Storage Tanks

Table A2-1 – Controlled VOC Emissions from Petroleum Refinery Storage Tanks

			Emissions per Tank (pounds/year)				Emissions per Tank (STPY)			Total VOC Tank Emissions (STPY)		
	Qty.	Roof Type ->	IFR / External Self Supporting Roof[1]	Fixed Cone Uncontrolled Emissions	Fixed Cone Not Connected to VRU	Fixed Cone connected to VRU[2]	Self-Supported & Gasketed Penetrations	Fixed Cone not connected to VRU	Fixed Cone connected to VRU	Self-Supported & Gasketed Penetrations	Fixed Cone not connected to VRU	Fixed Cone connected to VRU
CRUDE OIL	3.00	115 ID X 60	2,449.39				1.22			3.67		
HEAVY NAPHTHA	1.00	88 ID X 60	345.61				0.17			0.17		
GASOLINE	3.00	88 ID X 60	1,047.99				0.52			1.57		
REFORMATE	2.00	63 ID X 60	518.55				0.26			0.52		
FCC NAPHTHA	2.00	63 ID X 60	840.74				0.42			0.84		
LIGHT NAPHTHA	2.00	63 ID X 60	749.26				0.37			0.75		
ALKYLATE	2.00	63 ID X 60	548.95				0.27			0.55		
JET FUEL	2.00	63 ID X 60	225.38				0.11			0.23		
DESULPHURIZED DIESEL	2.00	88 ID X 60		1,392.64		69.63			0.03			0.07
UNDESULPHURIZED DIESEL	2.00	63 ID X 60		751.10		37.56			0.02			0.04
VACUUM GASOIL	2.00	63 ID X 60		8.64	8.64			0.00			8.64E-03	
DILUENT - HEAVY FCC PRODUCT	1.00	63 ID X 60		326.64	326.64			0.16			1.63E-01	
FUEL OIL	2.00	88 ID X 60		8.25	8.25			0.004			8.25E-03	
LIGHT SLOPS	1.00	25 ID X 30		22,281.90		1,114.10			0.56			0.56
HEAVY SLOPS	1.00	25 ID X 30		54.65	54.65			0.03			2.73E-02	
										8.30	**0.21**	**0.66**

[1] Self-supported & gasketed penetrations - External Self-Supporting Roof, double seals and wipers, all gasketed tank fittings and fixed floating roof legs.

[2] VRU Efficiency 95%

Emission Estimates from EPA Tanks 4.09d modeled runs.

Table A2-2 – Controlled HAPs Emissions from Petroleum Refinery Storage Tanks

	Emissions Factors for Petroleum Liquid Storage Tanks (lb/MMbbl)*			Emissions (lb/h)			STPY (Uncontrolled)			Control Efficiencies***			STPY (Controlled)				
Chemical Name	Crude Oil	Gasoline and Other Light Distillates	Diesel Fuel and Other Middle Distillates	Crude Oil	Gasoline and Other Light Distillates	Diesel Fuel and Other Middle Distillates	Crude Oil	Gasoline and Other Light Distillates**	Diesel Fuel and Other Middle Distillates	Crude Oil	Gasoline and Other Light Distillates	Diesel Fuel and Other Middle Distillates	Crude Oil	Gasoline and Other Light Distillates	Diesel Fuel and Other Middle Distillates	TOTAL (STPY)	TOTAL (lb/h)
HAP																	
2-Methyl naphthalene	0	3.5	3.5	0.00E+00	4.81E-03	3.21E-03	0.00	2.11E-02	1.41E-02	60%	60%	95%	0.00E+00	0.008	0.001	9.13E-03	2.09E-03
Anthracene	0	0.24	0.24	0.00E+00	3.30E-04	2.20E-04	0.00	1.45E-03	9.64E-04	60%	60%	95%	0.00E+00	0.001	0.000	6.26E-04	1.43E-04
Benzene	10	70	54	2.29E-02	9.63E-02	4.95E-02	0.10	4.22E-01	2.17E-01	60%	60%	95%	4.02E-02	0.169	0.011	2.20E-01	5.01E-02
Biphenyl	0.2	0.17	0	4.58E-04	2.34E-04	0.00E+00	0.00	1.02E-03	0.00E+00	60%	60%	95%	8.03E-04	0.000	0.000	1.21E-03	2.77E-04
Chrysene	0	0.21	0.21	0.00E+00	2.89E-04	1.93E-04	0.00	1.26E-03	8.43E-04	60%	60%	95%	0.00E+00	0.001	0.000	5.48E-04	1.25E-04
Cresol	0.6	13	0.19	1.38E-03	1.79E-02	1.74E-04	0.01	7.83E-02	7.63E-04	60%	60%	95%	2.41E-03	0.031	0.000	3.38E-02	7.71E-03
Cumene	0.5	15	10	1.15E-03	2.06E-02	9.17E-03	0.01	9.03E-02	4.02E-02	60%	60%	95%	2.01E-03	0.036	0.002	4.02E-02	9.17E-03
Ethylbenzene	1.6	31	18	3.67E-03	4.26E-02	1.65E-02	0.02	1.87E-01	7.23E-02	60%	60%	95%	6.42E-03	0.075	0.004	8.47E-02	1.93E-02
Fluorene	0	0.36	0.36	0.00E+00	4.95E-04	3.30E-04	0.00	2.17E-03	1.45E-03	60%	60%	95%	0.00E+00	0.001	0.000	9.40E-04	2.15E-04
Hexane	84	420	480	1.93E-01	5.78E-01	4.40E-01	0.84	2.53E+00	1.93E+00	60%	60%	95%	3.37E-01	1.012	0.096	1.45E+00	3.30E-01
Methanol	0	3.8	3.8	0.00E+00	5.23E-03	3.48E-03	0.00	2.29E-02	1.53E-02	60%	60%	95%	0.00E+00	0.009	0.001	9.92E-03	2.26E-03
Methyl isobutyl ketone	0	320	320	0.00E+00	4.40E-01	2.93E-01	0.00	1.93E+00	1.28E+00	60%	60%	95%	0.00E+00	0.771	0.064	8.35E-01	1.91E-01
Methyl tertiary-butyl ether	0	310	0	0.00E+00	4.26E-01	0.00E+00	0.00	1.87E+00	0.00E+00	60%	60%	95%	0.00E+00	0.747	0.000	7.47E-01	1.71E-01
Naphthalene	0.6	7.6	4	1.38E-03	1.05E-02	3.67E-03	0.01	4.58E-02	1.61E-02	60%	60%	95%	2.41E-03	0.018	0.001	2.15E-02	4.91E-03
Phenanthrene	0	1.5	1.5	0.00E+00	2.06E-03	1.38E-03	0.00	9.03E-03	6.02E-03	60%	60%	95%	0.00E+00	0.004	0.000	3.91E-03	8.94E-04
Phenol	0.9	0.9	0.67	2.06E-03	1.24E-03	6.14E-04	0.01	5.42E-03	2.69E-03	60%	60%	95%	3.61E-03	0.002	0.000	5.92E-03	1.35E-03
Pyrene	0	0.39	0.39	0.00E+00	5.36E-04	3.58E-04	0.00	2.35E-03	1.57E-03	60%	60%	95%	0.00E+00	0.001	0.000	1.02E-03	2.32E-04
Styrene	0	66	0	0.00E+00	9.08E-02	0.00E+00	0.00	3.97E-01	0.00E+00	60%	60%	95%	0.00E+00	0.159	0.000	1.59E-01	3.63E-02
Toluene	7.5	180	100	1.72E-02	2.48E-01	9.17E-02	0.08	1.08E+00	4.02E-01	60%	60%	95%	3.01E-02	0.434	0.020	4.84E-01	1.10E-01
Xylene	6.2	140	70	1.42E-02	1.93E-01	6.42E-02	0.06	8.43E-01	2.81E-01	60%	60%	95%	2.49E-02	0.337	0.014	3.76E-01	8.59E-02
				Total Hazardous Air Pollutants (HAP), Uncontrolled			**1.13**	**9.54**	**4.28**	**Total Hazardous Air Pollutants (HAP), Controlled**			**0.45**	**3.82**	**0.21**		

*: Adapted from Table 3-3. *Default Emissions Factors for Petroleum Refinery Storage Tanks* of Emissions Estimation Protocol for Petroleum Refineries, Version 3 (RTI, 2015).

**These factors consider an estimation of distillates production as a fraction of crude oil processing capacity, subtracting the production of heavy distillates and aromatics. In the case of Davis Refinery, such production is zero, then: Gasoline and Other Light Distillates (such as desulfurized naphtha, alkylates, reformates, butane) is considered to be up to 60% of crude oil processing rate, and, Diesel Fuel and Other Middle Distillates (diesel, kerosenes, jet fuel, fuel oil), is considered to be up to 40% of crude oil processing rate.

*** Efficiency of seals 60%. Efficiency of Vapor Recovery Systems 95% VRU + thermal destruction / thermal destruction achieved via flaring, use as fuel gas or thermal oxidizer.

APPENDIX 3: Results for Stationary Combustion

Table A3-1 – Summary of Controlled Emissions from Stationary Combustion Sources (Heaters/Boilers) – See detailed calculations in next Appendix

Emissions Summary	CO	Pb	PM Total 2.5	Filterable PM2.5	Condensable PM	NOx	SO_2	VOC	Metal HAP	Total Organic HAP
Heaters	87.918	1.54E-03	7.50	1.88	5.63	42.65	1.847	16.93	0.020	1.33
Boilers	3.500	6.13E-05	0.50	0.13	0.38	3.75	0.074	0.67	0.004	0.27
Total STPY	**91.42**	**1.60E-03**	**8.00**	**2.00**	**6.00**	**46.40**	**1.92**	**17.61**	**0.024**	**1.60**
Total lb/h	**20.87**	**3.65E-04**	**1.83**	**0.46**	**1.37**	**10.59**	**0.44**	**4.02**	**0.005**	**0.36**

Table A3-2 Emissions from Stationary Combustion Sources (Internal Combustion Engines)

			EMERGENCY GENERATOR SET						
			216-EG-1601A		216-EG-1601B		216-EG-1601C		
Criteria Pollutants	Emission Factor		Emission (lb/h)	Emission (STPY)	Emission (lb/h)	Emission (STPY)	Emission (lb/h)	Emission (STPY)	Total Emissions Gen Set (STPY)
	lb/HP-hr	lb/MMBTU							
Carbon Monoxide	0.0055		25.8	1.29	25.8	1.3	25.8	1.3	3.87
PM	0.0007		3.29	0.16	3.29	0.16	3.29	0.16	0.49
PM 10 (Total)		0.0573	3.32	0.17	3.3	0.2	3.3	0.2	4.98E-01
PM 10 (Filterable)		0.0496	2.87	0.14	2.9	0.1	2.9	0.1	4.31E-01
PM 2.5 (Total)		0.0479	2.78	0.14	2.8	0.1	2.8	0.1	4.16E-01
PM 2.5(Filterable)		0.0479	2.78	0.14	2.8	0.1	2.8	0.1	4.16E-01
PM (Condensable)		0.0077	0.45	0.02	0.4	0.0	0.4	0.0	6.69E-02
NOx*	0.013		61.0	3.05	61.0	3.1	61.0	3.1	9.15
SOx	4.05E-06		1.90E-02	9.49E-04	1.90E-02	9.49E-04	1.90E-02	9.49E-04	2.85E-03
TOC (as VOC)	7.05E-04		3.31	0.17	3.31	0.17	3.31	0.17	4.96E-01
Org HAP (Total)			2.53E-01	1.26E-02	2.53E-01	1.26E-02	2.53E-01	1.26E-02	3.79E-02

Table A3-2 Emissions from Stationary Combustion Sources (Internal Combustion Engines) Cont.

			FIREWATER PUMPS						
			212-P-1201 A		212-P-1201 B		212-P-1201 C		
Criteria Pollutants	Emission Factor		Emission (lb/h)	Emission (STPY)	Emission (lb/h)	Emission (STPY)	Emission (lb/h)	Emission (STPY)	Total Emissions FWP (STPY)
	lb/HP-hr	lb/MMBTU							
Carbon Monoxide	0.0055		3.3	0.17	3.3	0.2	3.3	0.2	0.50
PM	0.0007		0.42	0.02	0.42	0.02	0.42	0.02	0.06
PM 10 (Total)		0.0573	0.26	0.01	0.26	0.01	0.26	0.01	3.93E-02
PM 10 (Filterable)		0.0496	0.23	0.01	0.23	0.01	0.23	0.01	3.40E-02
PM 2.5 (Total)		0.0479	0.22	0.01	0.22	0.01	0.22	0.01	3.28E-02
PM 2.5(Filterable)		0.0479	0.22	0.01	0.22	0.01	0.22	0.01	3.28E-02
PM (Condensable)		0.0077	0.04	0.00	0.04	0.00	0.04	0.00	5.28E-03
NOx*	0.013		7.8	0.39	7.80	0.39	7.80	0.39	1.17
SOx	4.05E-06		2.43E-03	1.21E-04	2.43E-03	1.21E-04	2.43E-03	1.21E-04	3.64E-04
TOC (as VOC)	7.05E-04		0.42	0.02	0.42	0.02	0.42	0.02	6.35E-02
Org HAP (Total)			1.99E-02	9.97E-04	1.99E-02	9.97E-04	1.99E-02	9.97E-04	2.99E-03

*Controlled by ignition timing retard.

"From AP-42 Chapter 3 Section 3.4. Large Stationary Diesel And All Stationary Dual-fuel Engines. Table 3.4-1. GASEOUS EMISSION FACTORS FOR LARGE STATIONARY DIESEL AND ALL STATIONARY DUAL-FUEL ENGINES and Table 3.4-2. PARTICULATE AND PARTICLE-SIZING EMISSION FACTORS FOR LARGE UNCONTROLLED STATIONARY DIESEL ENGINES"

Table A3-3 HAPs Emissions from Stationary Combustion Sources (Internal Combustion Engines)

		EMERGENCY GENERATOR SETx3		FIREWATER PUMPSx3	
Volatile HAPS	lb/MMBTU	lb/hr	Emission (STPY)	lb/hr	Emission (STPY)
Benzene	7.76E-04	1.35E-01	6.75E-03	1.06E-02	5.32E-04
Toluene	2.81E-04	4.89E-02	2.44E-03	3.85E-03	1.93E-04
Xylene	1.93E-04	3.36E-02	1.68E-03	2.64E-03	1.32E-04
Propylene	2.79E-03	4.85E-01	2.43E-02	3.82E-02	1.91E-03
Formaldehyde	7.89E-05	1.37E-02	6.86E-04	1.08E-03	5.41E-05
Acetaldehyde	2.52E-05	4.38E-03	2.19E-04	3.45E-04	1.73E-05
Acrolein	7.88E-06	1.37E-03	6.85E-05	1.08E-04	5.40E-06
TOTAL VOLATILE HAPS		**7.22E-01**	**3.61E-02**	**5.69E-02**	**2.84E-03**
PAHs					
Naphthalene	1.30E-04	2.26E-02	1.13E-03	1.78E-03	8.91E-05
Acenaphthylene	9.23E-06	1.61E-03	8.03E-05	1.26E-04	6.32E-06
Acenaphthene	4.68E-06	8.14E-04	4.07E-05	6.41E-05	3.21E-06
Fluorene	1.28E-05	2.23E-03	1.11E-04	1.75E-04	8.77E-06
Phenanthrene	4.08E-05	7.09E-03	3.55E-04	5.59E-04	2.80E-05
Anthracene	1.23E-06	2.14E-04	1.07E-05	1.69E-05	8.43E-07
Fluoranthene	4.03E-06	7.01E-04	3.50E-05	5.52E-05	2.76E-06
Pyrene	3.71E-06	6.45E-04	3.23E-05	5.08E-05	2.54E-06
Benz(a)anthracene	6.22E-07	1.08E-04	5.41E-06	8.52E-06	4.26E-07
Chrysene	1.53E-06	2.66E-04	1.33E-05	2.10E-05	1.05E-06
Benzo(b)fluoranthene	1.11E-06	1.93E-04	9.65E-06	1.52E-05	7.61E-07
Benzo(k)fluoranthene	2.18E-07	3.79E-05	1.90E-06	2.99E-06	1.49E-07
Benzo(a)pyrene	2.57E-07	4.47E-05	2.23E-06	3.52E-06	1.76E-07
Indeno(1,2,3-cd)pyrene	4.14E-07	7.20E-05	3.60E-06	5.67E-06	2.84E-07
Dibenz(a,h)anthracene	3.46E-07	6.02E-05	3.01E-06	4.74E-06	2.37E-07
Benzo(g,h,l)perylene	5.56E-07	9.67E-05	4.83E-06	7.62E-06	3.81E-07
TOTAL PAH	**2.12E-04**	**3.69E-02**	**1.84E-03**	**2.91E-03**	**1.45E-04**

"From AP-42 Chapter 3 Section 3.4. Large Stationary Diesel And All Stationary Dual-fuel Engines. Table 3.4-3. SPECIATED ORGANIC COMPOUND EMISSION FACTORS FOR LARGE, UNCONTROLLED STATIONARY DIESEL ENGINES and Table 3.4-4. PAH EMISSION FACTORS FOR LARGE UNCONTROLLED STATIONARY DIESEL ENGINES"

APPENDIX 4: Results for Process Vents

Table A4-1 – Summary of Controlled Emissions from the Fluid Catalytic Cracking Unit[(a)]

	Uncontrolled			Controlled			
Criteria Pollutants	Emission Factors (lb/Mbbl Fresh Feed)	Emissions (lb/h) Uncontrolled	Emission (STPY) Uncontrolled	Contol Device	Control %	Emissions (lb/h) Controlled	Emission (STPY) Controlled
CO*	0	0	0	BCP	100%	0	0
Lead (Ratio to Nickel Conc.)	0.08	4.63E-04	2.03E-03	BCP	99%	4.63E-06	2.03E-05
PM10 Primary	-	11.448	50.1	Wet Scrubber or Tri-Mer	98.0%	0.229	1.003
PM condensable	-	3.876	17.0	Wet Scrubber or Tri-Mer	98.0%	0.078	0.340
PM2.5 filterable	-	6.55	28.7	Wet Scrubber or Tri-Mer	98.0%	0.131	0.573
PM2.5 Primary	-	10.42	45.7	Wet Scrubber or Tri-Mer	98.0%	0.208	0.913
PM10 filterable	-	7.572	33.2	Wet Scrubber or Tri-Mer	98.0%	0.151	0.663
NOx	71	42.53	186.3	COP-NP or Tri-Mer	98%	0.851	3.73
SO_2	***	151.80	664.9	Wet Scrubber or Dry Sorbent	99%	1.52	6.65
VOC**	220	131.78	577.2	Flue Gas Recirculation	99%	1.32	5.77
Total HAP [(b)]	-	4.85	5.39	BCP		2.70E-01	0.87

* Based on FCCU regenerator design for complete carbon burn operation

** Based on FCCU flue gas capture and recirculation design for complete combustion

*** Based on FCCU Licensor Data

BCP - Best Combustion Practices

COP-NP - Non-Platinum CO combustion promoter

[(a)] All calculations are based on Table 5-4 *Organic HAP Emissions Factors for CCU Catalyst Regenerator Vent* of Emissions Estimation Protocol for Petroleum Refineries, Version 3 (RTI, 2015), unless noted otherwise.

[(b)] Metal HAPs were calculated using the Equation 5-1 and Table 5-3 of the RTI Emissions Estimation Protocol. HCN emissions considered to be emitted only in startup and shutdown operations, which means a factor of 200 hours/year.

Table A4-2 – Emissions from the Catalytic Reforming Units (Reformers) [(a)]

		Reformer #2		Reformer #1	
	Emissions Factor (lb/Mbbl fresh feed)	Emission (lb/h)	Emission (US TPY)	Emission (lb/h)	Emission (US TPY)
Dioxins/PCBs					
Dioxin toxic equivalents (TEQ)	5.70E-09	9.41E-10	**3.16E-10**	2.08E-09	**7.00E-10**
Total polychlorinated biphenyls	2.60E-06	4.29E-07	**1.44E-07**	9.49E-07	**3.19E-07**
SV-NV Organic HAPs					
Naphthalene	3.50E-05	5.78E-06	1.94E-06	1.28E-05	4.30E-06
2-Methylnaphthalene	1.30E-06	2.15E-07	7.21E-08	4.75E-07	1.60E-07
Acenaphthylene	3.00E-08	4.95E-09	1.66E-09	1.10E-08	3.68E-09
Acenaphthene	4.30E-08	7.10E-09	2.39E-09	1.57E-08	5.28E-09
Fluorene	2.00E-07	3.30E-08	1.11E-08	7.30E-08	2.46E-08
Phenanthrene	6.10E-07	1.01E-07	3.38E-08	2.23E-07	7.49E-08
Anthracene	9.10E-08	1.50E-08	5.05E-09	3.32E-08	1.12E-08
Fluoranthene	1.00E-07	1.65E-08	5.55E-09	3.65E-08	1.23E-08
Pyrene	1.50E-08	2.48E-09	8.32E-10	5.48E-09	1.84E-09
Benzo(a)anthracene	9.00E-10	1.49E-10	4.99E-11	3.29E-10	1.10E-10
Benzo(b)fluoranthene	1.50E-09	2.48E-10	8.32E-11	5.48E-10	1.84E-10
Benzo(k)fluoranthene	7.50E-10	1.24E-10	4.16E-11	2.74E-10	9.21E-11
Benzo(e)pyrene	2.90E-09	4.79E-10	1.61E-10	1.06E-09	3.56E-10
Benzo(g,h,i)perylene	4.00E-09	6.60E-10	2.22E-10	1.46E-09	4.91E-10
Chrysene	2.90E-09	4.79E-10	1.61E-10	1.06E-09	3.56E-10
Dibenzo(a,h)anthracene	7.80E-10	1.29E-10	4.33E-11	2.85E-10	9.57E-11
Indeno(1,2,3-c,d)pyrene	1.70E-09	2.81E-10	9.43E-11	6.21E-10	2.09E-10
Total SV-NV Organic HAPs			**2.07E-06**		**4.59E-06**

		Reformer #2		Reformer #1	
	Emissions Factor (lb/Mbbl fresh feed)	Emission (lb/h)	Emission (US TPY)	Emission (lb/h)	Emission (US TPY)
Volatile Organics					
Benzene	0.004	6.60E-04	2.22E-04	1.46E-03	4.91E-04
Toluene	0.0096	1.58E-03	5.33E-04	3.50E-03	1.18E-03
Xylene	0.007	1.16E-03	3.88E-04	2.56E-03	8.59E-04
THC (Total Hydrocarbons)*	0.24	3.96E-02	**1.33E-02**	8.76E-02	**2.94E-02**
Other Inorganic HAPs					
Hydrogen chloride**	4.2	0.69	2.33E-01	1.53	5.16E-01
Chlorine**	0.23	0.04	1.28E-02	8.40E-02	2.82E-02
Total Inorganic HAPs		0.73	**2.47E-01**	1.62	**5.46E-01**

[(a)] All calculations are based on Table 5-6 *Emissions Factors for CRU Catalyst Regeneration Vent* of Emissions Estimation Protocol for Petroleum Refineries, Version 3 (RTI, 2015), unless noted otherwise.

*Total hydrocarbons may be used as a surrogate for VOC. Total hydrocarbons are presented on an as propane basis.

**Emissions factor for uncontrolled coke burn vent.

Table A4-3 –Controlled Emissions from Sulfur Recovery Unit (SRU) + Thermal Oxidizer [(a)]

SRU UNIT: LO-CAT ® (licensed by MERICHEM)			**LTPD**	**10.14**
Capacity (MMSCFD)	9.4			
Operating hours/year	8,760			
Number of Vents:	2			
to be directed to a Thermal Oxidizer				
Molar Flow combined	597.6	lbmol/h		
STD Vapor Volumetric Flow Combined	5.442	MMSCFD		
Component	Combined Mole%	Molar Flow (lbmol/h)		
H2	0.1722	1.0292		
C1	0.4742	2.8335		
Ethylene	0.3566	2.1310		
C2	0.4245	2.5370		
C3	0.1750	1.0456		
iC4	0.0295	0.1765		
nC4	0.0843	0.5040		
H2S	1.17E-06	0.0007	1.13	ppmv
CO2	0.0000	0.0000		
H2O	14.3990	86.0485		
O2	15.9311	95.2045		
N2	67.1550	401.3185		
Ar	0.7985	4.7717		
	100.0000	597.6007		
Specifications Thermal Oxidizer				
Duty (MMBTU/h)	1.583			
VOC Destruction (%)	99.9			
Flue Gas Component	**Molar Flow (lbmol/h)**	**MW**	**lb/hr**	**STPY**
C1	0.001	16.04	0.02	0.07
Ethylene	0.003	28.05	0.08	0.35
C2	0.002	30.07	0.06	0.28
C3	0.003	44.1	0.11	0.49
iC4	0.001	58.12	0.06	0.27
nC4	0.000	58.12	0.01	0.04
Sum VOC				**1.50**
SO2	0.0007	64.1	0.04	**0.20**

	Emission Factor *** (lb/MMBtu, LHV basis)	Emission (lb/h)	Emission (US tpy)
Carbon monoxide	0.31	4.91E-01	**2.15E+00**
Nitrogen oxides	0.068	1.08E-01	**4.71E-01**

Emissions Estimation Protocol for Petroleum Refineries, Table 6-2 "Flare Energy Consumption-Based Emission Factors"

[(a)] Calculations are based on available engineering data from licensor.

Table A4-4 –Emissions from Blowdown System (with vapor recovery and flaring) [(a)]

Compound Name	Emissions Factor (lb/MBbl of refinery feed)*	Emission (lb/h)	Emission (US TPY)
Carbon monoxide	4.3	9.85	0.83
Nitrogen oxides	19	43.54	3.66
Sulfur dioxide	27	61.88	5.20
Total hydrocarbons	0.8	1.83	0.15
SOOT ($PM_{2.5}$-FIL) from Lightly smoking flares (2)	0.027	0.1	0.005

[(a)] Calculations are based on Table 5-12. *Default Emissions Factors for Blowdown Systems* of Emissions Estimation Protocol for Petroleum Refineries, Version 3 (RTI, 2015).
* This calculation shows how much from the total flare emission, corresponds to the blowdown.

APPENDIX 5: Results for Flares

Table A5-1 –Flare Natural Gas (Fuel Gas)-Based Pilot Emissions

				Emissions (lb/h)								
				EF (lb/MMBTU)*	CO	Pb	PM total	PM COND	PM FILT	NOX	SO2	VOC
Flare	# Pilots	NG Flow/Pilot	NG SCF/h	MMBTU/h	0.0280000	0.0000005	0.0040000	0.0030000	0.0010000	0.0300000	0.0005882	0.0053922
HC Emergency Flare 1	3	100	300	0.306	8.57E-03	1.50E-07	1.22E-03	9.18E-04	3.06E-04	9.18E-03	1.80E-04	1.65E-03
HC Emergency Flare 2	3	100	300	0.306	8.57E-03	1.50E-07	1.22E-03	9.18E-04	3.06E-04	9.18E-03	1.80E-04	1.65E-03
Acid Flare	2	100	200	0.204	5.71E-03	1.00E-07	8.16E-04	6.12E-04	2.04E-04	6.12E-03	1.20E-04	1.10E-03
Enclosed HC Operating Flare	12	100	1200	1.224	3.43E-02	6.00E-07	4.90E-03	3.67E-03	1.22E-03	3.67E-02	7.20E-04	6.60E-03
				Total (lb/h)	**5.71E-02**	**1.00E-06**	**8.16E-03**	**6.12E-03**	**2.04E-03**	**6.12E-02**	**1.20E-03**	**1.10E-02**
				Total (STPY)	**0.25**	**4.38E-06**	**0.04**	**0.03**	**0.01**	**0.27**	**0.005**	**0.05**

*: Calculated based on the TABLE 1.4-2. AP 42, Fifth Edition, Volume I, Chapter 1: External Combustion Sources.

Table A5-2 – Total Flare HAP Emissions [(a)]

Compound	Emission Factor (tons/yr/bbl/cd)	Emission US TPY	Emission (lb/h)
Benzene	9.00E-06	0.495	1.13E-01
Toluene	7.00E-06	0.385	8.79E-02
Xylene	6.00E-06	0.330	7.53E-02
Methyl tertiary-butyl ether	3.00E-06	0.165	3.77E-02
Hexane	1.00E-05	0.550	1.26E-01
Formaldehyde	1.00E-06	0.055	1.26E-02
Ethylbenzene	2.00E-07	0.011	2.51E-03
1,3-Butadiene	7.00E-06	0.385	8.79E-02
Total VOC HAPs TPY		**2.376**	**5.42E-01**

[(a)] Calculations are based on Table 6-4. *Flare General Emission Factors* of Emissions Estimation Protocol for Petroleum Refineries, Version 3 (RTI, 2015)

APPENDIX 6: Results for Wastewater Treatment Systems

Table A6-1 – Waste Water Flow and Benzene Mass calculation for Petroleum Refinery Wastewater [(a)]

Process Unit	Average Waste Water Flow Factor (gal/bbl)	Average Benzene Concentration (ppmw)	Average Organic HAP Concentration (ppmw)	Average Throughput of the Unit (bbl/cd)	Waste Water Flow (gal/cd)	Uncontrolled Benzene Mass Flow (lb/cd)	Benzene Mass Flow (lb/d) Controlled ***
Crude distillation*	0.05*	21	140	55,000	115,644	20.25	1.013
Alkylation unit	6	3	6.9	5,388	0	0.00	-
Catalytic reforming	1.5	106	238	12,720	0	0.00	-
Hydrotreating/ hydrorefining	2.6	6.3	32	47,418	0	0.00	-
Catalytic cracking	2.4	13	165	14,376	0	0.00	-
Product blending	2.9	24	1,810	32,221	0	0.00	-
Sulfur plant**	9.7	0.8	3.4	11.37	110.28	0.0007	0.000
Isomerization	1.5	33	117	3,362	0	0.00	-
Tank drawdown	0.02	188	840	110,586	2,211.72	3.47	0.173
					Total Benzene Mass (lb/cd)	23.72	1.186

[(a)]Calculations are based on Table 7-8. *Model Process Unit Characteristics for Petroleum Refinery Wastewater* of Emissions Estimation Protocol for Petroleum Refineries, Version 3 (RTI, 2015)
* Estimated as 5% of the unit throughput (desalter purge)
**This flow factor is given in gal/ton of sulfur
*** Assumes VSEP pretreatment or similar pretreatment of inflow into API (or in lieu of API) 95% Assumed Efficiency

Table A6-2 – Controlled Waste Water Emissions Calculations for Petroleum Refinery Wastewater [(a)]

	Benzene Mass Ratio [(b)]	Mass Flow (lb/d)	Mass Fraction Table 7-10 BWON [(C)]	Emissions (STPY)	Emissions (STPY) Controlled*
Total VOC	81	96.08	0.6	10.52	**10.52**
2,2,4- Trimethylpentane	1.97	2.34	0.55	0.23	**1.06E-01**
Benzene	1	1.19	0.25	0.05	**2.44E-02**
Biphenyl	0.034	0.04	0.031	2.28E-04	**1.03E-04**
Cresols	0.25	0.30	0	0.00E+00	**0.00E+00**
Cumene	0.37	0.44	0.24	0.02	**8.65E-03**
Ethylbenzene	0.88	1.04	0.22	0.04	**1.89E-02**
Hexane	3.5	4.15	0.55	0.42	**1.88E-01**
Methyl tertiary-butyl ether	0.58	0.69	0.091	0.01	**5.14E-03**
Naphthalene	0.29	0.34	0.098	0.01	**2.77E-03**
Phenol	0.18	0.21	0	0.00	**0.00E+00**
Styrene	0.58	0.69	0.64	0.08	**3.62E-02**
Toluene	3.3	3.91	0.19	0.14	**6.11E-02**
Xylene	3.6	4.27	0.21	0.16	**7.36E-02**
1,3-Butadiene	0.0006	0.00	0.75	0.00	**4.38E-05**
			Total HAP (Uncontrolled)	1.16	
			Total HAP (Controlled)	0.52	

*55% Efficiency by use of activated carbon filters in API Separator

[(a)]Calculations are based on Table 7-8. *Model Process Unit Characteristics for Petroleum Refinery Wastewater* of Emissions Estimation Protocol for Petroleum Refineries, Version 3 (RTI, 2015)

[(b)] Calculations are based on Table 7-9. *Refinery Wastewater Contaminant Concentrations as a Ratio to Benzene* of Emissions Estimation Protocol for Petroleum Refineries, Version 3 (RTI, 2015)

[(c)] Calculations are based on Table 7-10. *Default Mass Emission Factors for Refinery Wastewater Collection and Treatment Systems* of Emissions Estimation Protocol for Petroleum Refineries, Version 3 (RTI, 2015). **Emission Factors for: BWON-Compliant Wastewater Collection and Treatment System

APPENDIX 7: Results for Cooling Towers

Table A7-1 – Controlled Emissions from the Cooling Tower Systems [(a)]

Compound	Emission Factor (lbs/MMgal)*	Emission (lb/h)	Emission (US TPY)
VOC	6	8.10E-02	3.55E-01
PM_{10}	31.5	4.25E-01	1.86E+00

[(a)] Calculations are based on Table 8-5. *Methodology Rank 5 Default Emission Factors* of Emissions Estimation Protocol for Petroleum Refineries, Version 3 (RTI, 2015).

* Emission Factors showed correspond only to induced draft, counter flow cooling towers, for a drift factor Water Drift Factor of 625.5 lb/Mgal (0.005% of drift factor for a water loss of 0.075 GPM) . Engineering calculations can yield drift factors considerably lower, to minimize water loss.

APPENDIX 8: Results for Product Loading

Table A8-1 – Controlled Emissions from the Rail Product Loading/Unloading Operations [(a)]

Description	EF (lb/Mgal)1	Uncontrolled Emissions (lb/h)	Uncontrolled Emissions (TPY)	Control Device	% Efficiency	Actual Emissions (TPY)	Actual Emissions (lb/h)
Crude oil	2	193	562	NG Assisted Flare or VRU	99.85%	0.83	0.19
Gasoline+butane	5	198	579	NG Assisted Flare or VRU	99.85%	0.86	0.20
Jet Kerosene	0.016	0.2	0.5		0.00%	0.52	0.12
Diesel No. 2	0.014	0.2	0.6		0.00%	0.60	0.14
Fuel Oil No. 6	0.0001	0.001	0.002	None	0%	0.00	0.00
	Totals	391	1,142			**2.81**	**0.64**

[(a)] Calculations are based on Table 5.2-5 AP-42, Fifth Edition, Volume I, Chapter 5: Transportation And Marketing Of Petroleum Liquids.

Table A8-2 – Controlled Emissions from the Truck Product Loading/Unloading Operations [(a)]

Description	EF (lb/Mgal)1	Uncontrolled Emissions (lb/h)	Uncontrolled Emissions (TPY)	Control Device	% Efficiency	Actual Emissions (TPY)	Actual Emissions (lb/h)
Gasoline+butane	5	84	244	NG Assisted Flare or VRU	99.85%	0.4	0.1
Jet Kerosene	0.016	0.1	0.2	None	0%	0.17	0.0
Diesel No. 2	0.014	0.1	0.2	None	0%	0.20	0.0
	Totals	84	245			**0.73**	**0.17**

[(a)] Calculations are based on Table 5.2-5 AP-42, Fifth Edition, Volume I, Chapter 5: Transportation And Marketing Of Petroleum Liquids.

APPENDIX 9: Results for Fugitive Dust

A.9.1. PAVED ROADS DUST

BASIS

It is assumed that crude oil inlet is via rails, not trucking. Also, it is assumed that 25% of liquid products (excep fuel oil) are loaded and transported via trucking; actual emissions might be lower, since in the future more volume may be transported via

Refinery production	bbl/d	gal/d	Notes	Truck Capacity (gallon)	trips/day
Gasoline+butane	9,555	401,321	Including offspec gasoline/naphtha and light slop	10000	40
Jet Kerosene	2,116	88,883		8000	11
Diesel	2,776	116,582	Including offspec diesel/fuel oil	6000	19
LPG	1,500	63,000	Including heavy slop	6000	11
				Total	81

Truck Round Trip Distance/t	0.0379	mile
	5280	feet
		mile
	200	feet traveled

TRUCK LOADING VMT

	81 Trip	0.04 mile	365 day	=	1,120	VMT
	day	Round Trip	year			year
				=	3.07	VMT
						d

Maximum Gross Weight for USDOT tractor trailer

	80000	lb
	40	ton

Average Speed

	5	mile
		hr
Wet days (Mean)	90	day
P (Value)	2160	hour
N (Value)	8760	hour

TRUCK VMT IN LIMITED ACCESS ROAD

Pollutant	k (lb/VMT)	Silt L (grain/sq ft) [2]	W (ST)	N (hour)	P (hour)	Emission Factor (lb/VMT)
PM 2.5	0.00054	2.15E-02	40	8760	2160	0.001
PM 10	0.0022	2.15E-02	40	8760	2160	0.003

PM 2.5 Emissions									
				0.001 lb	3.07 VMT	d	=	8.47E-05	lb PM 2.5
				VMT	d	24 h			h
			0.001 lb	3.07 VMT	365 day	ton	=	3.71E-04	Ton PM 2.5
			VMT	d	year	2000 lb			Year
	0.001 lb	3.07 VMT	d	h	kg	1000 g	=	1.07E-05	g PM 2.5
	VMT	d	24 h	3600 s	2.206 lb	s			s
PM 10 Emissions									
				0.003 lb	3.07 VMT	d	=	3.45E-04	lb PM TOT
				VMT	d	24 h			h
			0 lb	3.07 VMT	365 day	ton	=	1.51E-03	Ton PM TOT
			VMT	d	year	2000 lb			Year
	0.003lb	3.07 VMT	d	h	kg	1000 g	=	5.37E-04	g PM TOT
	VMT	d	24 h	3600 s	2.206 lb	s			s
Assumption	Silt loading at the lower range of values since the vehicles will not exceed 5 MPH, and will not be involved in heavy braking								
EMPLOYEE PARKING VMT									
Employees/shift	**Shifts**	**Trips**							
100	2	200							
Employee Round Trip Distance/trip									
	0.1894	mile							
	5280	feet							
		mile							
	1000	feet traveled							

Vehicle Miles Traveled

	200 Trip	0.19 mile	365 day	=	13,826	VMT
	day	Round Trip	year			year
				=	37.88	VMT
						d

Average Gross Weight Vehicle [1]

	3600	lb
	1.8	ton

Average Speed

	5	mile
		hr
Wet days (Mean)	90	day
P (Value)	2160	hour
N (Value)	8760	hour

EMPLOYEE VMT IN LIMITED ACCESS PARKING LOT

Pollutant	k (lb/VMT)	Silt L (grain/sq ft) [2]	W (ST)	N (hour)	P (hour)	Emission Factor (lb/VMT)
PM 2.5	0.00054	2.15E-02	1.8	8760	2160	2.80E-05
PM 10	0.0022	2.15E-02	1.8	8760	2160	1.14E-04

PM 2.5 Emissions

				0.000028 lb	37.88 VMT	d	=	4.42E-05	lb PM 2.5
				VMT	d	24 h			h
			0.00003 lb	37.88 VMT	365 day	ton	=	1.94E-04	Ton PM 2.5
			VMT	d	year	2000 lb			Year
	0.00003 lb	37.88 VMT	d	h	kg	1000 g	=	5.57E-06	g PM 2.5
	VMT	d	24 h	3600 s	2.206 lb	s			s

PM 10 Emissions									
				0.0001142 lb	37.88 VMT	d	=	1.80E-04	lb PM TOT
				VMT	d	24 h			h
			0.00011 lb	37.88 VMT	365 day	ton	=	7.89E-04	Ton PM TOT
			VMT	d	year	2000 lb			Year
	0.00011 lb	37.88 VMT	d	h	kg	1000 g	=	2.27E-05	g PM TOT
	VMT	d	24 h	3600 s	2.206 lb	s			s
Assumption	Silt loading at the lower range of values since the vehicles will not exceed 5 MPH, and will not be involved in heavy braking								
[1]	Passenger Car and Light Truck Fleets Characteristics, Corporate Average Fuel Economy (CAFE) standards								
	http://www.nhtsa.gov/cars/rules/CAFE/NewPassengerCarFleet.htm								
[2]	AP 42 Emission Factors, Fifth Edition, Volume I, Section 13.2.1. Paved Roads, Silt loading factor for limited access roads, page 13.2.1-9								

A.9.2. CATALYST HANDLING

Data

8.614	ton catalyst/14 day
14	day maintenance schedule
70000	bbl/day

Calculations

Spent Catalyst Production

$$\frac{8.614\ \text{ton}}{} \cdot \frac{2000\ \text{lb}}{\text{ton}} \cdot \frac{}{14\ \text{day}} = 1231\ \frac{\text{lb PM}}{\text{day}}$$

Percentage of catalyst suspended in the air during transfer into the bin: 15%

$$\frac{1230.6\ \text{lb}}{\text{day}} \cdot \frac{15\%}{} = 184.59\ \frac{\text{lb PM}}{\text{day}}$$

Controlled Emissions 95% efficiency

$$\frac{184.6\ \text{lb}}{\text{day}} \cdot \frac{\text{day}}{70000\ \text{bbl}} \cdot \frac{(1-0.95)}{} = 1.32\text{E-}04\ \frac{\text{lb PM}}{\text{bbl}}$$

Emissions for 365 day operation, 55 000 barrel/day

$$\frac{0.0001\ \text{lb}}{\text{bbl}} \cdot \frac{55000\ \text{bbl}}{\text{day}} \cdot \frac{365\ \text{day}}{\text{year}} = 2646.83\ \frac{\text{lb PM}}{\text{year}}$$

$$\frac{2646.8\text{lb}}{\text{year}} \cdot \frac{\text{yr}}{2000\ \text{lb}} = 1.32\ \frac{\text{ton PM}}{\text{year}}$$

EMISSION INVENTORY CALCULATION NOTES

	Criteria Pollutants										HAPs
Unit	CO	Pb	PM<10	Filerable PM <10	PM <2.5	Filterable PM <2.5	Condensable PM	NOx	SO_2	VOC	Total HAP
Leaks	0.00	0.00	0.00	0.00	0.00	0.00	0.00	0.00	0.00	21.06	2.39
Tanks	0.00	0.00	0.00	0.00	0.00	0.00	0.00	0.00	0.00	9.17	4.48
Stationary Combustion Sources	91.42	1.60E-03	13.06	3.26	13.06	3.26	9.79	46.40	1.92	17.61	1.62
Fluid Catalytic Cracking Unit	0.00	2.03E-05	1.00	0.66	0.91	0.57	0.34	3.73	6.65	5.77	0.87
Catalytic Reforming Unit	0.00	0.00	0.00	0.00	0.00	0.00	0.00	0.00	0.00	0.04	0.79
Sulfur Recovery Plant	2.15	0.00	0.00	0.00	0.00	0.00	0.00	0.47	0.20	1.50	0.00
Vacuum Systems	0.00	0.00	0.00	0.00	0.00	0.00	0.00	0.00	0.00	0.00	0.00
Blowdown System	0.83	0.00	0.01	0.01	0.01	0.01	0.00	3.66	5.20	0.15	0.00
Flares	0.74	4.38E-06	0.07	0.02	0.07	0.02	0.05	0.44	0.005	0.05	2.38
Wastewater	0.00	0.00	0.00	0.00	0.00	0.00	0.00	0.00	0.00	10.52	0.52
Cooling Towers	0.00	0.00	1.86	0.00	0.00	0.00	0.00	0.00	0.00	0.35	0.00
Rail Product Loading	0.00	0.00	0.00	0.00	0.00	0.00	0.00	0.00	0.00	2.81	0.00
Truck Product Loading	0.00	0.00	0.00	0.00	0.00	0.00	0.00	0.00	0.00	0.73	0.00
Fugitive Dust	0.00	0.00	1.33	0.00	5.65E-04	0.00	0.00	0.00	0.00	0.00	0.00
Total Short Ton per Year	95.13	1.62E-03	17.32	3.95	14.05	3.86	10.18	54.70	13.97	69.78	13.05

												Operating hours/year	8760
		LDAR Program	Number of Equipments (Average for a large refinery)*										
	Median Equipments Leak Components Count*	Yes	Crude Distillation	Alkylation	Catalytic reforming	Hydrotreating/ hydrorefining	Catalytic cracking	Product blending	Sulfur plant	Vacuum distillation	Isomerization		
Valves	Gas	97%	204	192	310	224	277	75	100	229	164		
	Light Liquid	97%	440	597	383	253	282	419	125	108	300		
	Heavy Liquid	0%	498	0	84	200	445	186	110	447	78		
Pumps	Light Liquid	85%	15	21	12	7	12	10	8	2	9		
	Heavy Liquid	85%	14	0	2	6	12	10	3	12	5		
	Compressors	85%	2	2	3	2	2	2	1	1	2		
Pressure Relief Valves****	Gas	97%	7	13	8	9	11	9	4	5	15		
Flanges	Gas	97%	549	491	653	439	593	227	280	473	300		
	Light Liquid	97%	982	1,328	842	581	747	664	460	136	540		
	Heavy Liquid	30%	1,046	600	132	481	890	473	179	1,072	265		
	Open-Ended Lines	97%	75	35	48	49	59	24	22	0	36		
	Sampling Connections	97%	9	6	9	8	15	8	7	7	7		

ASSUMPTIONS

LDAR program efficiency in reducing fugitive emissions equivalent to those achievable under the TCEQ 28LAER. LDAR assumes automated monitoring/directed maintenance

Average Efficiency 73%

	Average Weight Percent of Compound in Process Unit Streams[1]								
HAPs	Crude Distillation	Alkylation	Catalytic reforming	Hydrotreating/ hydrorefining	Catalytic cracking	Product blending	Sulfur plant	Vacuum distillation	Isomerization
1,3-Butadiene	0.01	0.22	0.009		0.012				
n-Hexane	4.3	1.6	2.8	1.9	1.0			0.01	3.2
2,2,4-Trimethyl pentane	0.05	25	0.25		0.3			0.003	0.01
Benzene	0.9	0.03	6.3	0.37	1.0			0.003	0.5
Toluene	1.7	2.0	17.4	1.7	3.3			0.04	0.6
Xylenes (total)	2.0	0.08	17.6	1.9	4.9			0.04	0.15
Ethylbenzene	0.63		3.9	0.37	1.1			0.02	
Cumene	0.12		0.42	0.07	0.10				
1,2,4-trimethyl benzene	0.63		5.9	0.4	1.9			0.02	
Naphthalene	0.25		0.87	0.25	0.72			0.12	
Biphenyl	0.06			0.22	0.43			0.09	

REFERENCES

1 - Table 2-7. Concentration of HAP in Refinery Process Unit Streams, Emissions Estimation Protocol for Petroleum Refineries, Version 3, RTI International.

U.S. Environmental Protection Agency. Oil and Natural Gas Sector: Standards of Performance for Crude Oil and Natural Gas Production, Transmission, and

*Process component counts as presented in EPA's document, Locating and Estimating Air Emissions from Sources of Benzene (U.S. EPA, 1998a), for refineries with

		LDAR Program	Emission Factor Definition**			Uncontrolled Leak Emissions (VOC) in lb/h								
	Median Equipments Leak Components Count*	Yes	Screening Value (ppmv)	Emission Factor (Kg/h)***	Emission Factor (lb/h)***	Crude Distillation	Alkylation	Catalytic reforming	Hydrotreating/ hydrorefining	Catalytic cracking	Product blending	Sulfur plant	Vacuum distillation	Isomerization
Valves	Gas	97%	500	2.36E-04	5.21E-04	0.11	0.10	0.16	0.12	0.14	0.04	0.05	0.12	0.09
	Light Liquid	97%	500	2.36E-04	5.21E-04	0.23	0.31	0.20	0.13	0.15	0.22	0.07	0.06	0.16
	Heavy Liquid	0%	500	2.36E-04	5.21E-04	0.26	0.00	0.04	0.10	0.23	0.10	0.06	0.23	0.04
Pumps	Light Liquid	85%	500	2.23E-03	4.92E-03	0.07	0.10	0.06	0.03	0.06	0.05	0.04	0.01	0.04
	Heavy Liquid	85%	500	2.23E-03	4.92E-03	0.07	0.00	0.01	0.03	0.06	0.05	0.01	0.06	0.02
	Compressors	85%	10,000	7.30E-02	1.61E-01	0.32	0.32	0.48	0.32	0.32	0.32	0.16	0.16	0.32
Pressure Relief Valves****	Gas	97%	500	2.36E-04	5.21E-04	0.00	0.01	0.00	0.00	0.01	0.00	0.00	0.00	0.01
Flanges	Gas	97%	500	3.64E-04	8.03E-04	0.44	0.39	0.52	0.35	0.48	0.18	0.22	0.38	0.24
	Light Liquid	97%	500	3.64E-04	8.03E-04	0.79	1.07	0.68	0.47	0.60	0.53	0.37	0.11	0.43
	Heavy Liquid	30%	500	3.64E-04	8.03E-04	0.84	0.48	0.11	0.39	0.71	0.38	0.14	0.86	0.21
	Open-Ended Lines	97%	0	0.00E+00	0.00E+00	0.00	0.00	0.00	0.00	0.00	0.00	0.00	0.00	0.00
	Sampling Connections	97%	500	5.29E-04	1.17E-03	0.01	0.01	0.01	0.01	0.02	0.01	0.01	0.01	0.01
				Total (lb/h)		3.14	2.79	2.28	1.96	2.78	1.88	1.14	2.00	1.58
ASSUMPTIONS				Total Uncontrolled (STPY)		13.77	12.23	9.98	8.58	12.16	8.25	4.98	8.75	6.91
				Total Controlled (STPY)		4.22	2.00	1.09	2.04	3.68	1.99	0.93	3.90	1.21
				Total Controlled (lb/h)		0.96	0.46	0.25	0.46	0.84	0.46	0.21	0.89	0.28

LDAR program efficiency in reducing fugitive emissions equivalent to th

Average Efficiency 73%

**Table 2-2. Equipment Leak Rate for Petroleum and SOCMI Equipment Components.

*** Emission factors used (correlation), based in a threshold of 500 ppmv for leak detection, with automated corrective action, and pegged emission factor for 10,000 ppm SV

HAPs	Total HAPs Uncontrolled (STPY)	Uncontrolled Leak Emissions (HAP) in STPY								
		Crude Distillation	Alkylation	Catalytic reforming	Hydrotreat/ hydrorefining	Catalytic cracking	Product blending	Sulfur plant	Vacuum distillation	Isomerization
1,3-Butadiene	3.06E-02	1.38E-03	2.69E-02	8.98E-04	0.00E+00	1.46E-03	0.00E+00	0.00E+00	0.00E+00	0.00E+00
n-Hexane	1.57E+00	5.92E-01	1.96E-01	2.79E-01	1.63E-01	1.22E-01	0.00E+00	0.00E+00	8.75E-04	2.21E-01
2,2,4-Trimethyl pentane	3.13E+00	6.88E-03	3.06E+00	2.49E-02	0.00E+00	3.65E-02	0.00E+00	0.00E+00	2.63E-04	6.91E-04
Benzene	9.44E-01	1.24E-01	3.67E-03	6.29E-01	3.17E-02	1.22E-01	0.00E+00	0.00E+00	2.63E-04	3.45E-02
Toluene	2.81E+00	2.34E-01	2.45E-01	1.74E+00	1.46E-01	4.01E-01	0.00E+00	0.00E+00	3.50E-03	4.14E-02
Xylenes (total)	2.81E+00	2.75E-01	9.78E-03	1.76E+00	1.63E-01	5.96E-01	0.00E+00	0.00E+00	3.50E-03	1.04E-02
Ethylbenzene	6.43E-01	8.67E-02	0.00E+00	3.89E-01	3.17E-02	1.34E-01	0.00E+00	0.00E+00	1.75E-03	0.00E+00
Cumene	7.66E-02	1.65E-02	0.00E+00	4.19E-02	6.00E-03	1.22E-02	0.00E+00	0.00E+00	0.00E+00	0.00E+00
1,2,4-trimethyl benzene	9.43E-01	8.67E-02	0.00E+00	5.89E-01	3.43E-02	2.31E-01	0.00E+00	0.00E+00	1.75E-03	0.00E+00
Naphthalene	2.41E-01	3.44E-02	0.00E+00	8.68E-02	2.14E-02	8.76E-02	0.00E+00	0.00E+00	1.05E-02	0.00E+00
Biphenyl	8.73E-02	8.26E-03	0.00E+00	0.00E+00	1.89E-02	5.23E-02	0.00E+00	0.00E+00	7.88E-03	0.00E+00
REFERENCES	**13.29**	1.47	3.54	5.53	0.62	1.80	0.00	0.00	0.03	0.31

		LDAR Program	Controlled Leak Emissions (VOC) in lb/h									
	Median Equipments Leak Components Count*	Yes	Crude Distillation	Alkylation	Catalytic reforming	Hydrotreating/ hydrorefining	Catalytic cracking	Product blending	Sulfur plant	Vacuum distillation	Isomerization	
Valves	Gas	97%	3.19E-03	3.00E-03	4.85E-03	3.50E-03	4.33E-03	1.17E-03	1.56E-03	3.58E-03	2.56E-03	
	Light Liquid	97%	6.88E-03	9.33E-03	5.99E-03	3.95E-03	4.41E-03	6.55E-03	1.95E-03	1.69E-03	4.69E-03	
	Heavy Liquid	0%	2.59E-01	0.00E+00	4.38E-02	1.04E-01	2.32E-01	9.69E-02	5.73E-02	2.33E-01	4.06E-02	
Pumps	Light Liquid	85%	1.11E-02	1.55E-02	8.85E-03	5.16E-03	8.85E-03	7.37E-03	5.90E-03	1.47E-03	6.64E-03	
	Heavy Liquid	85%	1.03E-02	0.00E+00	1.47E-03	4.42E-03	8.85E-03	7.37E-03	2.21E-03	8.85E-03	3.69E-03	
	Compressors	85%	4.83E-02	4.83E-02	7.25E-02	4.83E-02	4.83E-02	4.83E-02	2.42E-02	2.42E-02	4.83E-02	
Pressure Relief Valves****	Gas	97%	1.09E-04	2.03E-04	1.25E-04	1.41E-04	1.72E-04	1.41E-04	6.25E-05	7.82E-05	2.34E-04	
Flanges	Gas	97%	1.32E-02	1.18E-02	1.57E-02	1.06E-02	1.43E-02	5.47E-03	6.74E-03	1.14E-02	7.23E-03	
	Light Liquid	97%	2.37E-02	3.20E-02	2.03E-02	1.40E-02	1.80E-02	1.60E-02	1.11E-02	3.28E-03	1.30E-02	
	Heavy Liquid	30%	5.88E-01	3.37E-01	7.42E-02	2.70E-01	5.00E-01	2.66E-01	1.01E-01	6.03E-01	1.49E-01	
	Open-Ended Lines	97%	0.00E+00	0.00E+00	0.00E+00	0.00E+00	0.00E+00	0.00E+00	0.00E+00	0.00E+00	0.00E+00	
	Sampling Connections	97%	3.15E-04	2.10E-04	3.15E-04	2.80E-04	5.25E-04	2.80E-04	2.45E-04	2.45E-04	2.45E-04	
			0.96	0.46	0.25	0.46	0.84	0.46	0.21	0.89	0.28	4.81
ASSUMPTIONS			4.22	2.00	1.09	2.04	3.68	1.99	0.93	3.90	1.21	21.06

21.06 Total VOC Controlled (STPY)

4.81 Total VOC Controlled (lb/h)

LDAR program efficiency in reducing fugitive emissions equivalent to th

Average Efficiency 73%

	Controlled Leak Emissions (HAP) in STPY									
HAPs	Crude Distillation	Alkylation	Catalytic reforming	Hydrotreating/ hydrorefining	Catalytic cracking	Product blending	Sulfur plant	Vacuum distillation	Isomerization	Total HAPs Controlled (STPY)
1,3-Butadiene	4.22E-04	4.41E-03	9.78E-05	0.00E+00	4.41E-04	0.00E+00	0.00E+00	0.00E+00	0.00E+00	5.37E-03
n-Hexane	1.82E-01	3.21E-02	3.04E-02	3.87E-02	3.68E-02	0.00E+00	0.00E+00	3.90E-04	3.87E-02	3.59E-01
2,2,4-Trimethyl pentane	2.11E-03	5.01E-01	2.72E-03	0.00E+00	1.10E-02	0.00E+00	0.00E+00	1.17E-04	1.21E-04	5.17E-01
Benzene	3.80E-02	6.01E-04	6.84E-02	7.53E-03	3.68E-02	0.00E+00	0.00E+00	1.17E-04	6.05E-03	1.58E-01
Toluene	7.18E-02	4.01E-02	1.89E-01	3.46E-02	1.21E-01	0.00E+00	0.00E+00	1.56E-03	7.26E-03	4.66E-01
Xylenes (total)	8.45E-02	1.60E-03	1.91E-01	3.87E-02	1.80E-01	0.00E+00	0.00E+00	1.56E-03	1.81E-03	5.00E-01
Ethylbenzene	2.66E-02	0.00E+00	4.24E-02	7.53E-03	4.05E-02	0.00E+00	0.00E+00	7.80E-04	0.00E+00	1.18E-01
Cumene	5.07E-03	0.00E+00	4.56E-03	1.43E-03	3.68E-03	0.00E+00	0.00E+00	0.00E+00	0.00E+00	1.47E-02
1,2,4-trimethyl benzene	2.66E-02	0.00E+00	6.41E-02	8.15E-03	6.99E-02	0.00E+00	0.00E+00	7.80E-04	0.00E+00	1.70E-01
Naphthalene	1.06E-02	0.00E+00	9.45E-03	5.09E-03	2.65E-02	0.00E+00	0.00E+00	4.68E-03	0.00E+00	5.63E-02
Biphenyl	2.53E-03	0.00E+00	0.00E+00	4.48E-03	1.58E-02	0.00E+00	0.00E+00	3.51E-03	0.00E+00	2.63E-02
REFERENCES	0.45	0.58	0.60	0.15	0.54	0.00	0.00	0.01	0.05	**2.39**

	Qty.	Roof Type ->	Emissions per Tank (pounds/year)				Emissions per Tank (STPY)			Total VOC Tank Emissions (STPY)				VOC Emission per Unit (lb/h)	VOC Emission per Unit (STPY)
			IFR / External Self Supporting Roof[1]	Fixed Cone Uncontrolled Emissions	Fixed Cone Not Connected to VRU	Fixed Cone connected to VRU[2]	Self-Supported & Gasketed Penetrations	Fixed Cone not connected to VRU	Fixed Cone connected to VRU	Self-Supported & Gasketed Penetrations	Fixed Cone not connected to VRU	Fixed Cone connected to VRU			
CRUDE OIL	3.00	115 ID X 60	2,449.39				1.22			3.67			CRUDE OIL	2.80E-01	1.22E+00
HEAVY NAPHTHA	1.00	88 ID X 60	345.61				0.17			0.17			HEAVY NAPHTHA	3.95E-02	1.73E-01
GASOLINE	3.00	88 ID X 60	1,047.99				0.52			1.57			GASOLINE	1.20E-01	5.24E-01
REFORMATE	2.00	63 ID X 60	518.55				0.26			0.52			REFORMATE	5.92E-02	2.59E-01
FCC NAPHTHA	2.00	63 ID X 60	840.74				0.42			0.84			FCC NAPHTHA	9.60E-02	4.20E-01
LIGHT NAPHTHA	2.00	63 ID X 60	749.26				0.37			0.75			LIGHT NAPHTHA	8.55E-02	3.75E-01
ALKYLATE	2.00	63 ID X 60	548.95				0.27			0.55			ALKYLATE	6.27E-02	2.74E-01
JET FUEL	2.00	63 ID X 60	225.38				0.11			0.23			JET FUEL	2.57E-02	1.13E-01
DESULPHURIZED DIESEL	2.00	88 ID X 60		1,392.64		69.63			0.03			0.07	DESULPHURIZED DIESEL	7.95E-03	3.48E-02
UNDESULPHURIZED DIESEL	2.00	63 ID X 60		751.10		37.56			0.02			0.04	UNDESULPHURIZED DIESEL	4.29E-03	1.88E-02
VACUUM GASOIL	2.00	63 ID X 60		8.64	8.64			0.00			8.64E-03		VACUUM GASOIL	1.97E-03	8.64E-03
DILUENT - HEAVY FCC PRODUCT	1.00	63 ID X 60		326.64	326.64			0.16			1.63E-01		DILUENT - HEAVY FCC PRODUCT	3.73E-02	1.63E-01
FUEL OIL	2.00	88 ID X 60		8.25	8.25			0.004			8.25E-03		FUEL OIL	9.42E-04	4.13E-03
LIGHT SLOPS	1.00	25 ID X 30		22,281.90		1,114.10			0.56			0.56	LIGHT SLOPS	1.27E-01	5.57E-01
HEAVY SLOPS	1.00	25 ID X 30		54.65	54.65			0.03			2.73E-02		HEAVY SLOPS	6.24E-03	2.73E-02
										8.30	**0.21**	**0.66**	**Total Tank Farm**	**2.09**	**9.17**

1 - Self-supported & gasketed penetrations - External Self-Supporting Roof, double seals and wipers, all gasketed tank fittings and fixed floating roof legs.
2 - VRU Efficiency 95%
3 - Emission Estimates from EPA Tanks 4.09d modeled runs

	Emissions Factors for Petroleum Liquid Storage Tanks (lb/MMbbl)*			Emissions (lb/h)			STPY (Uncontrolled)			Control Efficiencies			STPY (Controlled)				
Chemical Name	Crude Oil	Gasoline and Other Light Distillates	Diesel Fuel and Other Middle Distillates	Crude Oil	Gasoline and Other Light Distillates	Diesel Fuel and Other Middle Distillates	Crude Oil	Gasoline and Other Light Distillates**	Diesel Fuel and Other Middle Distillates	Crude Oil	Gasoline and Other Light Distillates	Diesel Fuel and Other Middle Distillates	Crude Oil	Gasoline and Other Light Distillates	Diesel Fuel and Other Middle Distillates	TOTAL (STPY)	TOTAL (lb/h)
HAP																	
2-Methyl naphthalene	0	3.5	3.5	0.00E+00	4.81E-03	3.21E-03	0.00	2.11E-02	1.41E-02	60%	60%	95%	0.00E+00	0.008	0.001	9.13E-03	2.09E-03
Anthracene	0	0.24	0.24	0.00E+00	3.30E-04	2.20E-04	0.00	1.45E-03	9.64E-04	60%	60%	95%	0.00E+00	0.001	0.000	6.26E-04	1.43E-04
Benzene	10	70	54	2.29E-02	9.63E-02	4.95E-02	0.10	4.22E-01	2.17E-01	60%	60%	95%	4.02E-02	0.169	0.011	2.20E-01	5.01E-02
Biphenyl	0.2	0.17	0	4.58E-04	2.34E-04	0.00E+00	0.00	1.02E-03	0.00E+00	60%	60%	95%	8.03E-04	0.000	0.000	1.21E-03	2.77E-04
Chrysene	0	0.21	0.21	0.00E+00	2.89E-04	1.93E-04	0.00	1.26E-03	8.43E-04	60%	60%	95%	0.00E+00	0.001	0.000	5.48E-04	1.25E-04
Cresol	0.6	13	0.19	1.38E-03	1.79E-02	1.74E-04	0.01	7.83E-02	7.63E-04	60%	60%	95%	2.41E-03	0.031	0.000	3.38E-02	7.71E-03
Cumene	0.5	15	10	1.15E-03	2.06E-02	9.17E-03	0.01	9.03E-02	4.02E-02	60%	60%	95%	2.01E-03	0.036	0.002	4.02E-02	9.17E-03
Ethylbenzene	1.6	31	18	3.67E-03	4.26E-02	1.65E-02	0.02	1.87E-01	7.23E-02	60%	60%	95%	6.42E-03	0.075	0.004	8.47E-02	1.93E-02
Fluorene	0	0.36	0.36	0.00E+00	4.95E-04	3.30E-04	0.00	2.17E-03	1.45E-03	60%	60%	95%	0.00E+00	0.001	0.000	9.40E-04	2.15E-04
Hexane	84	420	480	1.93E-01	5.78E-01	4.40E-01	0.84	2.53E+00	1.93E+00	60%	60%	95%	3.37E-01	1.012	0.096	1.45E+00	3.30E-01
Methanol	0	3.8	3.8	0.00E+00	5.23E-03	3.48E-03	0.00	2.29E-02	1.53E-02	60%	60%	95%	0.00E+00	0.009	0.001	9.92E-03	2.26E-03
Methyl isobutyl ketone	0	320	320	0.00E+00	4.40E-01	2.93E-01	0.00	1.93E+00	1.28E+00	60%	60%	95%	0.00E+00	0.771	0.064	8.35E-01	1.91E-01
Methyl tertiary-butyl ether	0	310	0	0.00E+00	4.26E-01	0.00E+00	0.00	1.87E+00	0.00E+00	60%	60%	95%	0.00E+00	0.747	0.000	7.47E-01	1.71E-01
Naphthalene	0.6	7.6	4	1.38E-03	1.05E-02	3.67E-03	0.01	4.58E-02	1.61E-02	60%	60%	95%	2.41E-03	0.018	0.001	2.15E-02	4.91E-03
Phenanthrene	0	1.5	1.5	0.00E+00	2.06E-03	1.38E-03	0.00	9.03E-03	6.02E-03	60%	60%	95%	0.00E+00	0.004	0.000	3.91E-03	8.94E-04
Phenol	0.9	0.9	0.67	2.06E-03	1.24E-03	6.14E-04	0.01	5.42E-03	2.69E-03	60%	60%	95%	3.61E-03	0.002	0.000	5.92E-03	1.35E-03
Pyrene	0	0.39	0.39	0.00E+00	5.36E-04	3.58E-04	0.00	2.35E-03	1.57E-03	60%	60%	95%	0.00E+00	0.001	0.000	1.02E-03	2.32E-04
Styrene	0	66	0	0.00E+00	9.08E-02	0.00E+00	0.00	3.97E-01	0.00E+00	60%	60%	95%	0.00E+00	0.159	0.000	1.59E-01	3.63E-02
Toluene	7.5	180	100	1.72E-02	2.48E-01	9.17E-02	0.08	1.08E+00	4.02E-01	60%	60%	95%	3.01E-02	0.434	0.020	4.84E-01	1.10E-01
Xylene	6.2	140	70	1.42E-02	1.93E-01	6.42E-02	0.06	8.43E-01	2.81E-01	60%	60%	95%	2.49E-02	0.337	0.014	3.76E-01	8.59E-02
				Total Hazardous Air Pollutants (HAP), Uncontrolled			**1.13**	**9.54**	**4.28**	**Total Hazardous Air Pollutants (HAP), Controlled**			**0.45**	**3.82**	**0.21**		

Operating hours/year (opsh) 8760
Refinery capacity (bbl/d) 55,000
Efficiency of seals 60%
Efficiency of Vapor Recovery Systems 95% VRU + thermal destruction thermal destruction achieved via flaring, use as fuel gas or thermal oxidizer
Reference 1: "Emissions Estimation Protocol for Petroleum Refineries, Table 3-3. *Default Emissions Factors for Petroleum Refinery Storage Tank*
*Table 3-3. Default Emissions Factors for Petroleum Refinery Storage Tanks (Normalized by production capacity of the refinery)
**These factors consider an estimation of distillates production as a fraction of feed processing capacity, subtracting the production of heavy distillates and aromatics. In the case of Soljet, such production is zero, then:
Gasoline and Other Light Distillates (such as desulfurized naphtha, alkylates, reformates, butane) is considered to be up to 60% of Transmix processing rate, and,
Diesel Fuel and Other Middle Distillates (diesel, kerosenes, jet fuel, fuel oil), is considered to be up to 40% of Transmix processing rate.

	Atmospheric Distillation Unit #1		Atmospheric Distillation Unit #2		Vacuum Distillation Unit				Fluid Catalytic Cracking Unit (FCCU)		ISOMERIZATION			
	ADU #1 HEATER		ADU #2 HEATER		Vacuum Heater 1		Vacuum Heater 2		Raw Charge Heater		Reactor Charge Heater		Dryer Regeneration Heater	
	101-H-0101		102-H-0201		103-H-0301		103-H-0302		112-H-1201		117-H-1701		117-H-1702	
Heat Capacity (MMBTU/h)	72		72		76.47		57.65		28.35		1.65		3.75	
SCR Control Device (YES/NO)?	YES		YES		YES		YES		NO		NO		NO	
PM Control (YES/NO)?	YES		YES		YES		YES		NO		NO		NO	
Best Combustion Practice (5 ppm)	YES		YES		YES		YES		YES		YES		YES	
Criteria Pollutants	Emission (lb/h)	Emission (STPY)	Emissions (lb/h)	Emission (STPY)	Emissions (lb/h)	Emission (STPY)	Emission (lb/h)	Emission (STPY)	Emission (lb/h)	Emission (STPY)	Emissions (lb/h)	Emission (STPY)	Emission (lb/h)	Emission (STPY)
Carbon Monoxide	2.02E+00	8.83E+00	2.02E+00	8.83E+00	2.14E+00	9.38E+00	1.61E+00	7.07E+00	7.94E-01	3.48E+00	4.62E-02	2.02E-01	1.05E-01	4.60E-01
Lead	3.53E-05	1.55E-04	3.53E-05	1.55E-04	3.75E-05	1.64E-04	2.82E-05	1.24E-04	1.39E-05	6.08E-05	8.09E-07	3.54E-06	1.84E-06	8.05E-06
PM (Total)	8.64E-02	3.78E-01	8.64E-02	3.78E-01	9.18E-02	4.02E-01	6.92E-02	3.03E-01	1.13E-01	4.97E-01	6.60E-03	2.89E-02	1.50E-02	6.57E-02
PM (Condensable)	6.48E-02	2.84E-01	6.48E-02	2.84E-01	6.88E-02	3.01E-01	5.19E-02	2.27E-01	8.51E-02	3.73E-01	4.95E-03	2.17E-02	1.13E-02	4.93E-02
PM (Filterable)	2.16E-02	9.46E-02	2.16E-02	9.46E-02	2.29E-02	1.00E-01	1.73E-02	7.58E-02	2.84E-02	1.24E-01	1.65E-03	7.23E-03	3.75E-03	1.64E-02
NOx	4.54E-01	1.99E+00	4.54E-01	1.99E+00	4.82E-01	2.11E+00	3.63E-01	1.59E+00	8.51E-01	3.73E+00	4.95E-02	2.17E-01	1.13E-01	4.93E-01
SOx	4.24E-02	1.86E-01	4.24E-02	1.86E-01	4.50E-02	1.97E-01	3.39E-02	1.49E-01	1.67E-02	7.30E-02	9.71E-04	4.25E-03	2.21E-03	9.66E-03
VOC	3.88E-01	1.70E+00	3.88E-01	1.70E+00	4.12E-01	1.81E+00	3.11E-01	1.36E+00	1.53E-01	6.70E-01	8.90E-03	3.90E-02	2.02E-02	8.86E-02
Metal HAP (Total)	5.26E-04	2.31E-03	5.26E-04	2.31E-03	5.59E-04	2.45E-03	4.22E-04	1.85E-03	2.07E-04	9.08E-04	1.21E-05	5.28E-05	2.74E-05	1.20E-04
Org HAP (Total)	1.41E-01	6.17E-01	1.41E-01	6.17E-01	1.50E-01	6.55E-01	1.13E-01	4.94E-01	5.54E-02	2.43E-01	3.23E-03	1.41E-02	7.33E-03	3.21E-02
Org HAP (Controlled)	3.52E-02	1.54E-01	3.52E-02	1.54E-01	3.74E-02	1.64E-01	2.82E-02	1.23E-01	1.39E-02	6.07E-02	8.07E-04	3.53E-03	1.83E-03	8.03E-03
NOx Ultra Low NOx	2.160	9.461	2.160	9.461	2.294	10.048	1.730	7.575	0.851	3.725	0.050	0.217	0.113	0.493
NOx Ultra Low NOx + SCR	0.454	1.987	0.454	1.987	0.482	2.110	0.363	1.591	0.000	0.000	0.000	0.000	0.000	0.000

Emissions Summary	CO	Pb	PM Total	Filterable PM	Condensable PM	NOx	SO_2	VOC	Total Metal HAP	Controlled Organic HAP
Heaters	87.918	1.54E-03	7.50	1.88	5.63	42.65	1.847	16.93	0.020	1.33
Boilers	3.500	6.13E-05	0.50	0.13	0.38	3.75	0.074	0.67	0.004	0.27
Total STPY	**91.42**	**1.60E-03**	**8.00**	**2.00**	**6.00**	**46.40**	**1.92**	**17.61**	**0.024**	**1.60**
Total lb/h	**20.87**	**3.65E-04**	**1.83**	**0.46**	**1.37**	**10.59**	**0.44**	**4.02**	**0.005**	**0.36**

Hours of Operation

Annual Operation Hours
(opsh) 8760 hour/year

EMISSION FACTORS

Criteria Pollutants Emission Factors	lb/MMBTU		
Carbon Monoxide	2.80E-02		Vendor Guarantee
CO Controlled	2.80E-02		Vendor Guarantee
Lead*	4.90E-07		
NOx (Ultra Low NOx Burner)	3.00E-02		Vendor Guarantee
NOx (Ultra Low NOx + SCR)	6.30E-03		Vendor Guarantee
PM (Total)	0.0040		Vendor Guarantee
PM (Total) Controlled	0.0012	70%	Venturi scrubber
PM (Condensable)	0.0030		
PM (Filterable)	0.0010		
SOx	0.0006		
VOC	0.0054		

Metal HAPs	Emission Factor (lb/M
Antimony	5.20E-07
Arsenic	2.00E-07
Beryllium	1.30E-07
Cadmium	1.10E-06
Chromium (hexavalent)	2.80E-07
Chromium	1.40E-06
Cobalt	8.20E-08
Manganese	3.70E-07
Mercury	2.50E-07
Nickel	2.10E-06
Selenium	8.80E-07
Total Metal HAP (lb/MMBTU)	7.31E-06

Org HAP Total	1.96E-03		
Org HAP Controlled	4.89E-04	75%	Good combustion practices

PM (Total)	7.45E-03
PM (Condensable) * **	5.59E-03
PM (Filterable) * **	1.86E-03
Total	7.45E-03

REFERENCES

*Calculated based on the TABLE 1.4-2. AP 42, Fifth Edition, Volume I Chapter 1: External Combustion Sources, unless noted otherwise

** All PM (total, Condensable, and filterable) is assumed to be less than 1.0 micrometer in diameter. Therefore, the PM emission factors presented here may be used to estimate PM10, PM2.5 or PM1 emissions.

	Heavy Naphtha Hydrotreater				Catalytic Reformer Unit #2		Catalytic Reformer Unit #1		Diesel Hydrotreater		Alkylation Unit		Light Naphtha Hydrotreater		Kere
	Charge Heater		Stripper Reboiler Heater		CRU #2 Heater		CRU #1 Heater		Diesel HDT Heater		Alky Unit Heater		Feed Heater		Kerosene H
	105-H-0501		105-H-0502		106-H-0601		107-H-0701		110-H-1001		118-H-1801		111-H-1101		125-H
Heat Capacity (MMBTU/h)	13.75		16.25		41.73		92.5		16.25		84.19		13.9		12.5
SCR Control Device (YES/NO)?	NO		NO		YES		YES		NO		YES		NO		NO
PM Control (YES/NO)?	NO		NO		YES		YES		NO		NO		NO		NO
Best Combustion Practice (5 ppm)	YES		YES		YES		YES		YES		YES		YES		YES
Criteria Pollutants	Emissions (lb/h)	Emission (STPY)	Emission (lb/h)	Emission (STPY)	Emissions (lb/h)	Emission (STPY)	Emissions (lb/h)	Emission (STPY)	Emissions (lb/h)	Emission (STPY)	Emissions (lb/h)	Emission (STPY)	Emissions (lb/h)	Emission (STPY)	Emissions (lb/h)
Carbon Monoxide	3.85E-01	1.69E+00	4.55E-01	1.99E+00	1.17E+00	5.12E+00	2.59E+00	1.13E+01	4.55E-01	1.99E+00	2.36E+00	1.03E+01	3.89E-01	1.70E+00	3.50E-01
Lead	6.74E-06	2.95E-05	7.96E-06	3.49E-05	2.04E-05	8.96E-05	4.53E-05	1.99E-04	7.96E-06	3.49E-05	4.13E-05	1.81E-04	6.81E-06	2.98E-05	6.13E-06
PM (Total)	5.50E-02	2.41E-01	6.50E-02	2.85E-01	5.01E-02	2.19E-01	1.11E-01	4.86E-01	6.50E-02	2.85E-01	3.37E-01	1.48E+00	5.56E-02	2.44E-01	5.00E-02
PM (Condensable)	4.13E-02	1.81E-01	4.88E-02	2.14E-01	3.76E-02	1.64E-01	8.33E-02	3.65E-01	4.88E-02	2.14E-01	2.53E-01	1.11E+00	4.17E-02	1.83E-01	3.75E-02
PM (Filterable)	1.38E-02	6.02E-02	1.63E-02	7.12E-02	1.25E-02	5.48E-02	2.78E-02	1.22E-01	1.63E-02	7.12E-02	8.42E-02	3.69E-01	1.39E-02	6.09E-02	1.25E-02
NOx	4.13E-01	1.81E+00	4.88E-01	2.14E+00	2.63E-01	1.15E+00	5.83E-01	2.55E+00	4.88E-01	2.14E+00	5.30E-01	2.32E+00	4.17E-01	1.83E+00	3.75E-01
SOx	8.09E-03	3.54E-02	9.56E-03	4.19E-02	2.45E-02	1.08E-01	5.44E-02	2.38E-01	9.56E-03	4.19E-02	4.95E-02	2.17E-01	8.18E-03	3.58E-02	7.35E-03
VOC	7.41E-02	3.25E-01	8.76E-02	3.84E-01	2.25E-01	9.86E-01	4.99E-01	2.18E+00	8.76E-02	3.84E-01	4.54E-01	1.99E+00	7.50E-02	3.28E-01	6.74E-02
Metal HAP (Total)	1.01E-04	4.40E-04	1.19E-04	5.20E-04	3.05E-04	1.34E-03	6.76E-04	2.96E-03	1.19E-04	5.20E-04	6.16E-04	2.70E-03	1.02E-04	4.45E-04	9.14E-05
Org HAP (Total)	2.69E-02	1.18E-01	3.18E-02	1.39E-01	8.16E-02	3.57E-01	1.81E-01	7.92E-01	3.18E-02	1.39E-01	1.65E-01	7.21E-01	2.72E-02	1.19E-01	2.44E-02
Org HAP (Controlled)	6.72E-03	2.94E-02	7.94E-03	3.48E-02	2.04E-02	8.94E-02	4.52E-02	1.98E-01	7.94E-03	3.48E-02	4.12E-02	1.80E-01	6.80E-03	2.98E-02	6.11E-03
NOx Ultra Low NOx	0.413	1.807	0.488	2.135	1.252	5.483	2.775	12.155	0.488	2.135	2.526	11.063	0.417	1.826	0.375
NOx Ultra Low NOx + SCR	0.000	0.000	0.000	0.000	0.263	1.151	0.583	2.552	0.000	0.000	0.530	2.323	0.000	0.000	0.000

EMISSION FACTORS

Criteria Pollutants Emission Factors	lb/MMBTU		
Carbon Monoxide	2.80E-02		Vendor Guarantee
CO Controlled	2.80E-02		Vendor Guarantee
Lead*	4.90E-07		
NOx (Ultra Low NOx Burner)	3.00E-02		Vendor Guarantee
NOx (Ultra Low NOx + SCR)	6.30E-03		Vendor Guarantee
PM (Total)	0.0040		Vendor Guarantee
PM (Total) Controlled	0.0012	70%	Venturi scrubber
PM (Condensable)	0.0030		
PM (Filterable)	0.0010		
SOx	0.0006		
VOC	0.0054		

Metal HAPs	Emission Factor (lb/M
Antimony	5.20E-07
Arsenic	2.00E-07
Beryllium	1.30E-07
Cadmium	1.10E-06
Chromium (hexavalent)	2.80E-07
Chromium	1.40E-06
Cobalt	8.20E-08
Manganese	3.70E-07
Mercury	2.50E-07
Nickel	2.10E-06
Selenium	8.80E-07
Total Metal HAP (lb/MMBTU)	7.31E-06

Org HAP Total	1.96E-03		
Org HAP Controlled	4.89E-04	75%	Good combustion practices

PM (Total)	7.45E-03
PM (Condensable) * **	5.59E-03
PM (Filterable) * **	1.86E-03
Total	7.45E-03

REFERENCES

*Calculated based on the TABLE 1.4-2. AP 42, Fifth Edition, Volume I Chapter 1: External Combustion Sources, unless noted otherwise

** All PM (total, Condensable, and filterable) is assumed to be less than 1.0 micrometer in diameter. Therefore, the PM emission factors presented here may be used to estimate PM10, PM2.5 or PM1 emissions.

	› HT	FCC Naphtha Hydrotreater		BOILER						
	IDT Heater	FCC NHDT Heater		Boiler 1		Boiler 2		Boiler 3		
	-2501	114-H-1401		202-PK-0201A		202-PK-0201B		202-PK-0201C		
Heat Capacity (MMBTU/h)		17.48		60		60		5	Stand-by Duty	
SCR Control Device (YES/NO)?		NO		NO		NO		NO		
PM Control (YES/NO)?		NO		NO		NO		NO		
Best Combustion Practice (5 ppm)		YES		YES		YES		YES		
Criteria Pollutants	Emission (STPY)	Emission (lb/h)	Emission (STPY)	Emission (lb/h)	Emission (STPY)	Emission (lb/h)	Emission (STPY)	Emission (lb/h)	Emission (STPY)	Total Emissions (STPY)
Carbon Monoxide	1.53E+00	4.89E-01	2.14E+00	1.68E+00	7.36E+00	1.68E+00	7.36E+00	1.40E-01	6.13E-01	91.42
Lead	2.68E-05	8.57E-06	3.75E-05	2.94E-05	1.29E-04	2.94E-05	1.29E-04	2.45E-06	1.07E-05	1.60E-03
PM (Total)	2.19E-01	6.99E-02	3.06E-01	2.40E-01	1.05E+00	2.40E-01	1.05E+00	2.00E-02	8.76E-02	8.00
PM (Condensable)	1.64E-01	5.24E-02	2.30E-01	1.80E-01	7.88E-01	1.80E-01	7.88E-01	1.50E-02	6.57E-02	6.00
PM (Filterable)	5.48E-02	1.75E-02	7.66E-02	6.00E-02	2.63E-01	6.00E-02	2.63E-01	5.00E-03	2.19E-02	2.00
NOx	1.64E+00	5.24E-01	2.30E+00	1.80E+00	7.88E+00	1.80E+00	7.88E+00	1.50E-01	6.57E-01	46.40
SOx	3.22E-02	1.03E-02	4.50E-02	3.53E-02	1.55E-01	3.53E-02	1.55E-01	2.94E-03	1.29E-02	1.92
VOC	2.95E-01	9.43E-02	4.13E-01	3.24E-01	1.42E+00	3.24E-01	1.42E+00	2.70E-02	1.18E-01	17.61
Metal HAP (Total)	4.00E-04	1.28E-04	5.60E-04	4.39E-04	1.92E-03	4.39E-04	1.92E-03	3.66E-05	1.60E-04	0.024
Org HAP (Total)	1.07E-01	3.42E-02	1.50E-01	1.17E-01	5.14E-01	1.17E-01	5.14E-01	9.78E-03	4.28E-02	6.38
Org HAP (Controlled)	2.68E-02	8.55E-03	3.74E-02	2.93E-02	1.28E-01	2.93E-02	1.28E-01	2.44E-03	1.07E-02	1.60
NOx Ultra Low NOx	1.643	0.524	2.297	1.800	7.884	1.800	7.884	0.150	0.657	97.95
NOx Ultra Low NOx + SCR	0.000	0.000	0.000	0.000	0.000	0.000	0.000	0.000	0.000	13.70

Page intentionally left in blank

Operating hours/year 8760 **CONTROL** 75% Good combustion practices

Emissions Estimation Protocol for Petroleum Refineries, Version 3, RTI International.

Table 4-3. Summary of Emission Factors for Boilers and Process Heaters Firing Various Fuels

		Atmospheric Distillation Unit #1		Tag	101-H-0101		Atmospheric Distillation Unit #2		Tag	102-H-0201
		Crude Oil Heater		flue gas (lb/h)	66470.6		Crude Oil Heater 1		flue gas (lb/h)	66470.6
		Heat input (MMBtu/h)	72	density (lb/ft3)	0.0296		Heat input (MMBtu/h)	72	density (lb/ft3)	0.0296
Emission Factors for Boilers and Process Heaters Firing. External Combustion, Natural Gas/Refinery Gas (lb/MMBtu)		Emission (lb/h)	Emission (us tpy)	flue gas (ft3/h)	2,245,628.38	37,427.14	Emission (lb/h)	Emission (us tpy)	flue gas (ft3/h)	2,245,628.38
				T (°F)	787.7				T (°F)	787.7
				T(K)	692.98				T(K)	692.98
HAP				Conc. (lb/ft3)	Conc. (mg/m3)	Conc. (ppmv)			Conc. (lb/ft3)	Conc. (mg/m3)
Antimony	5.20E-07	3.74E-05	1.64E-04	1.67E-11	2.67E-04	1.25E-04	3.74E-05	1.64E-04	1.67E-11	2.67E-04
Arsenic	2.00E-07	1.44E-05	6.31E-05	6.41E-12	1.03E-04	7.80E-05	1.44E-05	6.31E-05	6.41E-12	1.03E-04
Beryllium	1.30E-07	9.36E-06	4.10E-05	4.17E-12	6.68E-05	4.22E-04	9.36E-06	4.10E-05	4.17E-12	6.68E-05
Cadmium	1.10E-06	7.92E-05	3.47E-04	3.53E-11	5.65E-04	2.86E-04	7.92E-05	3.47E-04	3.53E-11	5.65E-04
Chromium (hexavalent)	2.80E-07	2.02E-05	8.83E-05	8.98E-12	1.44E-04	1.57E-04	2.02E-05	8.83E-05	8.98E-12	1.44E-04
Chromium (total)	1.40E-06	1.01E-04	4.42E-04	4.49E-11	7.20E-04	7.87E-04	1.01E-04	4.42E-04	4.49E-11	7.20E-04
Cobalt	8.20E-08	5.90E-06	2.59E-05	2.63E-12	4.22E-05	4.07E-05	5.90E-06	2.59E-05	2.63E-12	4.22E-05
Manganese	3.70E-07	2.66E-05	1.17E-04	1.19E-11	1.90E-04	1.97E-04	2.66E-05	1.17E-04	1.19E-11	1.90E-04
Mercury	2.50E-07	1.80E-05	7.88E-05	8.02E-12	1.29E-04	3.64E-05	1.80E-05	7.88E-05	8.02E-12	1.29E-04
Nickel	2.10E-06	1.51E-04	6.62E-04	6.73E-11	1.08E-03	1.05E-03	1.51E-04	6.62E-04	6.73E-11	1.08E-03
Selenium	8.80E-07	6.34E-05	2.78E-04	2.82E-11	4.52E-04	3.26E-04	6.34E-05	2.78E-04	2.82E-11	4.52E-04
Total Metal HAPs	**-**	**5.26E-04**	**2.31E-03**	**2.34E-10**	**3.76E-03**		**5.26E-04**	**2.31E-03**	**2.34E-10**	**3.76E-03**
Volatile Organics HAPs				Conc. (lb/ft3)	Conc. (mg/m3)	Conc. (ppmv)			Conc. (lb/ft3)	Conc. (mg/m3)
Acetaldehyde	1.20E-05	2.16E-04	9.46E-04	9.62E-11	1.54E-03	1.99E-03	2.16E-04	9.46E-04	9.62E-11	1.54E-03
Acrolein	1.70E-05	3.06E-04	1.34E-03	1.36E-10	2.18E-03	2.22E-03	3.06E-04	1.34E-03	1.36E-10	2.18E-03
Benzene	2.10E-06	3.78E-05	1.66E-04	1.68E-11	2.70E-04	1.96E-04	3.78E-05	1.66E-04	1.68E-11	2.70E-04
Benzo(a)anthracene	2.20E-08	3.96E-07	1.73E-06	1.76E-13	2.83E-06	7.04E-07	3.96E-07	1.73E-06	1.76E-13	2.83E-06
Dichlorobenzene	1.20E-06	2.16E-05	9.46E-05	9.62E-12	1.54E-04	5.97E-05	2.16E-05	9.46E-05	9.62E-12	1.54E-04
Ethylbenzene	1.60E-05	2.88E-04	1.26E-03	1.28E-10	2.06E-03	1.10E-03	2.88E-04	1.26E-03	1.28E-10	2.06E-03
Formaldehyde	7.40E-05	1.33E-03	5.83E-03	5.93E-10	9.51E-03	1.80E-02	1.33E-03	5.83E-03	5.93E-10	9.51E-03
Hexane	1.80E-03	3.24E-02	1.42E-01	1.44E-08	2.31E-01	1.53E-01	3.24E-02	1.42E-01	1.44E-08	2.31E-01
Toluene	3.30E-06	5.94E-05	2.60E-04	2.65E-11	4.24E-04	2.62E-04	5.94E-05	2.60E-04	2.65E-11	4.24E-04
Xylene (total)	2.50E-05	4.50E-04	1.97E-03	2.00E-10	3.21E-03	1.72E-03	4.50E-04	1.97E-03	2.00E-10	3.21E-03
Total VOC HAPs		3.51E-02	1.54E-01	1.56E-08	2.51E-01		3.51E-02	1.54E-01	1.56E-08	2.51E-01
Semivolatile and Nonvolatile Organics (excluding dioxin/furans)				Conc. (lb/ft3)	Conc. (mg/m3)	Conc. (ppmv)			Conc. (lb/ft3)	Conc. (mg/m3)
Acenaphthene	2.40E-09	4.32E-08	1.89E-07	1.92E-14	3.08E-07	1.14E-07	4.32E-08	1.89E-07	1.92E-14	3.08E-07
Acenaphthylene	6.50E-09	1.17E-07	5.12E-07	5.21E-14	8.35E-07	3.12E-07	1.17E-07	5.12E-07	5.21E-14	8.35E-07
Anthracene	4.70E-09	8.46E-08	3.71E-07	3.77E-14	6.04E-07	1.93E-07	8.46E-08	3.71E-07	3.77E-14	6.04E-07
Benzo(a)pyrene	5.70E-08	1.03E-06	4.49E-06	4.57E-13	7.33E-06	1.65E-06	1.03E-06	4.49E-06	4.57E-13	7.33E-06
Benzo(b)fluoranthene	2.70E-08	4.86E-07	2.13E-06	2.16E-13	3.47E-06	7.82E-07	4.86E-07	2.13E-06	2.16E-13	3.47E-06

Operating hours/year 8760 **CONTROL** 75% Good combustion practices

Emissions Estimation Protocol for Petroleum Refineries, Version 3, RTI International.

Table 4-3. Summary of Emission Factors for Boilers and Process Heaters Firing Various Fuels

		Atmospheric Distillation Unit #1		Tag	101-H-0101		Atmospheric Distillation Unit #2		Tag	102-H-0201
		Crude Oil Heater		flue gas (lb/h)	66470.6		Crude Oil Heater 1		flue gas (lb/h)	66470.6
		Heat input (MMBtu/h)	72	density (lb/ft3)	0.0296		Heat input (MMBtu/h)	72	density (lb/ft3)	0.0296
Emission Factors for Boilers and Process Heaters Firing. External Combustion, Natural Gas/Refinery Gas (lb/MMBtu)		Emission (lb/h)	Emission (us tpy)	flue gas (ft3/h)	2,245,628.38	37,427.14	Emission (lb/h)	Emission (us tpy)	flue gas (ft3/h)	2,245,628.38
				T (°F)	787.7				T (°F)	787.7
				T(K)	692.98				T(K)	692.98
HAP				Conc. (lb/ft3)	Conc. (mg/m3)	Conc. (ppmv)			Conc. (lb/ft3)	Conc. (mg/m3)
Benzo(g,h,i)perylene	1.30E-09	2.34E-08	1.02E-07	1.04E-14	1.67E-07	3.44E-08	2.34E-08	1.02E-07	1.04E-14	1.67E-07
Benzo(k)fluoranthene	1.70E-08	3.06E-07	1.34E-06	1.36E-13	2.18E-06	4.92E-07	3.06E-07	1.34E-06	1.36E-13	2.18E-06
Chrysene	1.60E-09	2.88E-08	1.26E-07	1.28E-14	2.06E-07	5.12E-08	2.88E-08	1.26E-07	1.28E-14	2.06E-07
Dibenz(a,h)anthracene	1.20E-09	2.16E-08	9.46E-08	9.62E-15	1.54E-07	3.15E-08	2.16E-08	9.46E-08	9.62E-15	1.54E-07
7,12-Dimethylbenz(a) anthracene	1.60E-08	2.88E-07	1.26E-06	1.28E-13	2.06E-06	4.56E-07	2.88E-07	1.26E-06	1.28E-13	2.06E-06
Fluoranthene	2.90E-09	5.22E-08	2.29E-07	2.32E-14	3.73E-07	1.05E-07	5.22E-08	2.29E-07	2.32E-14	3.73E-07
Fluorene	2.70E-09	4.86E-08	2.13E-07	2.16E-14	3.47E-07	1.19E-07	4.86E-08	2.13E-07	2.16E-14	3.47E-07
Indeno-(1,2,3cd)pyrene	7.10E-08	1.28E-06	5.60E-06	5.69E-13	9.12E-06	1.88E-06	1.28E-06	5.60E-06	5.69E-13	9.12E-06
3-Methylchloranthrene	1.80E-09	3.24E-08	1.42E-07	1.44E-14	2.31E-07	4.90E-08	3.24E-08	1.42E-07	1.44E-14	2.31E-07
2-Methylnaphthalene	2.40E-08	4.32E-07	1.89E-06	1.92E-13	3.08E-06	1.23E-06	4.32E-07	1.89E-06	1.92E-13	3.08E-06
Naphthalene	6.00E-07	1.08E-05	4.73E-05	4.81E-12	7.71E-05	3.42E-05	1.08E-05	4.73E-05	4.81E-12	7.71E-05
Phenanthrene	1.70E-08	3.06E-07	1.34E-06	1.36E-13	2.18E-06	6.97E-07	3.06E-07	1.34E-06	1.36E-13	2.18E-06
Phenol	4.00E-06	7.20E-05	3.15E-04	3.21E-11	5.14E-04	3.11E-04	7.20E-05	3.15E-04	3.21E-11	5.14E-04
Pyrene	4.90E-09	8.82E-08	3.86E-07	3.93E-14	6.30E-07	1.77E-07	8.82E-08	3.86E-07	3.93E-14	6.30E-07
Sum PAH (without naphthalene)	**4.26E-06**	**7.67E-05**	**3.36E-04**	**3.41E-11**	**5.47E-04**	**3.19E-04**	**7.67E-05**	**3.36E-04**	**3.41E-11**	**5.47E-04**
Total SV-NV Organic HAPs		8.75E-05	3.83E-04	3.89E-11	6.24E-04		8.75E-05	3.83E-04	3.89E-11	6.24E-04
TOTAL ORGANIC HAPS		**3.52E-02**	**1.54E-01**				**3.52E-02**	**1.54E-01**		
Other Compounds of Interest				Conc. (lb/ft3)	Conc. (mg/m3)	Conc. (ppmv)			Conc. (lb/ft3)	Conc. (mg/m3)
Barium	4.30E-06	3.10E-04	1.36E-03	1.38E-10	2.21E-03	9.15E-04	3.10E-04	1.36E-03	1.38E-10	2.21E-03
Butane	2.10E-03	1.51E-01	6.62E-01	6.73E-08	1.08E+00	1.06E+00	1.51E-01	6.62E-01	6.73E-08	1.08E+00
Copper	8.30E-07	5.98E-05	2.62E-04	2.66E-11	4.27E-04	3.82E-04	5.98E-05	2.62E-04	2.66E-11	4.27E-04
Ethane	3.00E-03	2.16E-01	9.46E-01	9.62E-08	1.54E+00	2.92E+00	2.16E-01	9.46E-01	9.62E-08	1.54E+00
Hydrogen sulfide	8.50E-05	6.12E-03	2.68E-02	2.73E-09	4.37E-02	7.29E-02	6.12E-03	2.68E-02	2.73E-09	4.37E-02
Molybdenum	1.10E-06	7.92E-05	3.47E-04	3.53E-11	5.65E-04	3.35E-04	7.92E-05	3.47E-04	3.53E-11	5.65E-04
Phosphorus (Inorganic HAP)	6.40E-07	4.61E-05	2.02E-04	2.05E-11	3.29E-04	6.04E-04	4.61E-05	2.02E-04	2.05E-11	3.29E-04
Vanadium	2.30E-06	1.66E-04	7.25E-04	7.37E-11	1.18E-03	1.32E-03	1.66E-04	7.25E-04	7.37E-11	1.18E-03
Zinc	2.80E-05	2.02E-03	8.83E-03	8.98E-10	1.44E-02	1.25E-02	2.02E-03	8.83E-03	8.98E-10	1.44E-02

*Calculated based on the TABLE 1.4-2. AP 42, Fifth Edition, Volume IChapter 1: External Combustion Sources.

** All PM (total, Condensable, and filterable) is assumed to be less than 1.0 micrometer in diameter.Therefore, the PM emission factors presented here were used for PM2.5 emissions.

Operating hours/year 8760

Emissions Estimation Protocol for Petroleum Refineries, Version 3, RTI International.

Table 4-3. Summary of Emission Factors for Boilers and Process Heaters Firing Various Fuels

			Vacuum Distillation Unit		Tag	103-H-0301		Vacuum Distillation Unit		Tag
			Vacuum Heater 1		flue gas (lb/h)	70,380.60		Vacuum Heater 2		flue gas (lb/h)
			Heat input (MMBtu/h)	76.47	density (lb/ft3)	0.0349		Heat input (MMBtu/h)	57.65	density (lb/ft3)
Emission Factors for Boilers and Process Heaters Firing. External Combustion, Natural Gas/Refinery Gas (lb/MMBtu)		37,427.14	Emission (lb/h)	Emission (us tpy)	flue gas (ft3/h)	2,016,636.10	33,610.60	Emission (lb/h)	Emission (us tpy)	flue gas (ft3/h)
					T (°F)	600.4				T (°F)
					T(K)	588.93				T(K)
HAP		Conc. (ppmv)			Conc. (lb/ft3)	Conc. (mg/m3)	Conc. (ppmv)			Conc. (lb/ft3)
Antimony	5.20E-07	1.25E-04	3.98E-05	1.74E-04	1.97E-11	3.16E-04	1.25E-04	3.00E-05	1.31E-04	1.97E-11
Arsenic	2.00E-07	7.80E-05	1.53E-05	6.70E-05	7.58E-12	1.22E-04	7.84E-05	1.15E-05	5.05E-05	7.59E-12
Beryllium	1.30E-07	4.22E-04	9.94E-06	4.35E-05	4.93E-12	7.90E-05	4.24E-04	7.49E-06	3.28E-05	4.93E-12
Cadmium	1.10E-06	2.86E-04	8.41E-05	3.68E-04	4.17E-11	6.69E-04	2.87E-04	6.34E-05	2.78E-04	4.17E-11
Chromium (hexavalent)	2.80E-07	1.57E-04	2.14E-05	9.38E-05	1.06E-11	1.70E-04	1.58E-04	1.61E-05	7.07E-05	1.06E-11
Chromium (total)	1.40E-06	7.87E-04	1.07E-04	4.69E-04	5.31E-11	8.51E-04	7.91E-04	8.07E-05	3.54E-04	5.31E-11
Cobalt	8.20E-08	4.07E-05	6.27E-06	2.75E-05	3.11E-12	4.99E-05	4.09E-05	4.73E-06	2.07E-05	3.11E-12
Manganese	3.70E-07	1.97E-04	2.83E-05	1.24E-04	1.40E-11	2.25E-04	1.98E-04	2.13E-05	9.34E-05	1.40E-11
Mercury	2.50E-07	3.64E-05	1.91E-05	8.37E-05	9.48E-12	1.52E-04	3.66E-05	1.44E-05	6.31E-05	9.48E-12
Nickel	2.10E-06	1.05E-03	1.61E-04	7.03E-04	7.96E-11	1.28E-03	1.05E-03	1.21E-04	5.30E-04	7.96E-11
Selenium	8.80E-07	3.26E-04	6.73E-05	2.95E-04	3.34E-11	5.35E-04	3.27E-04	5.07E-05	2.22E-04	3.34E-11
Total Metal HAPs	-		**5.59E-04**	**2.45E-03**	**2.49E-10**	**4.45E-03**		**4.22E-04**	**1.85E-03**	**1.88E-10**
Volatile Organics HAPs		Conc. (ppmv)			Conc. (lb/ft3)	Conc. (mg/m3)	Conc. (ppmv)			Conc. (lb/ft3)
Acetaldehyde	1.20E-05	1.99E-03	2.29E-04	1.00E-03	1.14E-10	1.82E-03	2.00E-03	1.73E-04	7.58E-04	1.14E-10
Acrolein	1.70E-05	2.22E-03	3.25E-04	1.42E-03	1.61E-10	2.58E-03	2.23E-03	2.45E-04	1.07E-03	1.61E-10
Benzene	2.10E-06	1.96E-04	4.01E-05	1.76E-04	1.99E-11	3.19E-04	1.97E-04	3.03E-05	1.33E-04	1.99E-11
Benzo(a)anthracene	2.20E-08	7.04E-07	4.21E-07	1.84E-06	2.09E-13	3.34E-06	7.08E-07	3.17E-07	1.39E-06	2.09E-13
Dichlorobenzene	1.20E-06	5.97E-05	2.29E-05	1.00E-04	1.14E-11	1.82E-04	6.00E-05	1.73E-05	7.58E-05	1.14E-11
Ethylbenzene	1.60E-05	1.10E-03	3.06E-04	1.34E-03	1.52E-10	2.43E-03	1.11E-03	2.31E-04	1.01E-03	1.52E-10
Formaldehyde	7.40E-05	1.80E-02	1.41E-03	6.20E-03	7.02E-10	1.12E-02	1.81E-02	1.07E-03	4.67E-03	7.02E-10
Hexane	1.80E-03	1.53E-01	3.44E-02	1.51E-01	1.71E-08	2.74E-01	1.53E-01	2.59E-02	1.14E-01	1.71E-08
Toluene	3.30E-06	2.62E-04	6.31E-05	2.76E-04	3.13E-11	5.02E-04	2.63E-04	4.76E-05	2.08E-04	3.13E-11
Xylene (total)	2.50E-05	1.72E-03	4.78E-04	2.09E-03	2.37E-10	3.80E-03	1.73E-03	3.60E-04	1.58E-03	2.37E-10
Total VOC HAPs			3.73E-02	1.63E-01	1.85E-08	2.96E-01		2.81E-02	1.23E-01	1.85E-08
Semivolatile and Nonvolatile Organics (excluding dioxin/furans)		Conc. (ppmv)			Conc. (lb/ft3)	Conc. (mg/m3)	Conc. (ppmv)			Conc. (lb/ft3)
Acenaphthene	2.40E-09	1.14E-07	4.59E-08	2.01E-07	2.28E-14	3.65E-07	1.14E-07	3.46E-08	1.52E-07	2.28E-14
Acenaphthylene	6.50E-09	3.12E-07	1.24E-07	5.44E-07	6.16E-14	9.88E-07	3.14E-07	9.37E-08	4.10E-07	6.16E-14
Anthracene	4.70E-09	1.93E-07	8.99E-08	3.94E-07	4.46E-14	7.14E-07	1.94E-07	6.77E-08	2.97E-07	4.46E-14
Benzo(a)pyrene	5.70E-08	1.65E-06	1.09E-06	4.77E-06	5.40E-13	8.66E-06	1.66E-06	8.22E-07	3.60E-06	5.40E-13
Benzo(b)fluoranthene	2.70E-08	7.82E-07	5.16E-07	2.26E-06	2.56E-13	4.10E-06	7.86E-07	3.89E-07	1.70E-06	2.56E-13

Operating hours/year 8760

Emissions Estimation Protocol for Petroleum Refineries, Version 3, RTI International.

Table 4-3. Summary of Emission Factors for Boilers and Process Heaters Firing Various Fuels

			Vacuum Distillation Unit		Tag	103-H-0301		Vacuum Distillation Unit		Tag
			Vacuum Heater 1		flue gas (lb/h)	70,380.60		Vacuum Heater 2		flue gas (lb/h)
			Heat input (MMBtu/h)	76.47	density (lb/ft3)	0.0349		Heat input (MMBtu/h)	57.65	density (lb/ft3)
Emission Factors for Boilers and Process Heaters Firing. External Combustion, Natural Gas/Refinery Gas (lb/MMBtu)		37,427.14	Emission (lb/h)	Emission (us tpy)	flue gas (ft3/h)	2,016,636.10	33,610.60	Emission (lb/h)	Emission (us tpy)	flue gas (ft3/h)
					T (°F)	600.4				T (°F)
					T(K)	588.93				T(K)
HAP		Conc. (ppmv)			Conc. (lb/ft3)	Conc. (mg/m3)	Conc. (ppmv)			Conc. (lb/ft3)
Benzo(g,h,i)perylene	1.30E-09	3.44E-08	2.49E-08	1.09E-07	1.23E-14	1.98E-07	3.46E-08	1.87E-08	8.21E-08	1.23E-14
Benzo(k)fluoranthene	1.70E-08	4.92E-07	3.25E-07	1.42E-06	1.61E-13	2.58E-06	4.95E-07	2.45E-07	1.07E-06	1.61E-13
Chrysene	1.60E-09	5.12E-08	3.06E-08	1.34E-07	1.52E-14	2.43E-07	5.15E-08	2.31E-08	1.01E-07	1.52E-14
Dibenz(a,h)anthracene	1.20E-09	3.15E-08	2.29E-08	1.00E-07	1.14E-14	1.82E-07	3.17E-08	1.73E-08	7.58E-08	1.14E-14
7,12-Dimethylbenz(a) anthracene	1.60E-08	4.56E-07	3.06E-07	1.34E-06	1.52E-13	2.43E-06	4.58E-07	2.31E-07	1.01E-06	1.52E-13
Fluoranthene	2.90E-09	1.05E-07	5.54E-08	2.43E-07	2.75E-14	4.41E-07	1.05E-07	4.18E-08	1.83E-07	2.75E-14
Fluorene	2.70E-09	1.19E-07	5.16E-08	2.26E-07	2.56E-14	4.10E-07	1.19E-07	3.89E-08	1.70E-07	2.56E-14
Indeno-(1,2,3cd)pyrene	7.10E-08	1.88E-06	1.36E-06	5.95E-06	6.73E-13	1.08E-05	1.89E-06	1.02E-06	4.48E-06	6.73E-13
3-Methylchloranthrene	1.80E-09	4.90E-08	3.44E-08	1.51E-07	1.71E-14	2.74E-07	4.93E-08	2.59E-08	1.14E-07	1.71E-14
2-Methylnaphthalene	2.40E-08	1.23E-06	4.59E-07	2.01E-06	2.28E-13	3.65E-06	1.24E-06	3.46E-07	1.52E-06	2.28E-13
Naphthalene	6.00E-07	3.42E-05	1.15E-05	5.02E-05	5.69E-12	9.12E-05	3.44E-05	8.65E-06	3.79E-05	5.69E-12
Phenanthrene	1.70E-08	6.97E-07	3.25E-07	1.42E-06	1.61E-13	2.58E-06	7.01E-07	2.45E-07	1.07E-06	1.61E-13
Phenol	4.00E-06	3.11E-04	7.65E-05	3.35E-04	3.79E-11	6.08E-04	3.12E-04	5.77E-05	2.53E-04	3.79E-11
Pyrene	4.90E-09	1.77E-07	9.37E-08	4.10E-07	4.65E-14	7.45E-07	1.78E-07	7.06E-08	3.09E-07	4.65E-14
Sum PAH (without naphthalene)	**4.26E-06**	**3.19E-04**	**8.14E-05**	**3.57E-04**	**4.04E-11**	**6.47E-04**	**3.21E-04**	**6.14E-05**	**2.69E-04**	**4.04E-11**
Total SV-NV Organic HAPs			9.29E-05	4.07E-04	4.61E-11	7.39E-04		7.00E-05	3.07E-04	4.61E-11
TOTAL ORGANIC HAPS			**3.74E-02**	**1.64E-01**				**2.82E-02**	**1.23E-01**	
Other Compounds of Interest		Conc. (ppmv)			Conc. (lb/ft3)	Conc. (mg/m3)	Conc. (ppmv)			Conc. (lb/ft3)
Barium	4.30E-06	9.15E-04	3.29E-04	1.44E-03	1.63E-10	2.61E-03	9.20E-04	2.48E-04	1.09E-03	1.63E-10
Butane	2.10E-03	1.06E+00	1.61E-01	7.03E-01	7.96E-08	1.28E+00	1.06E+00	1.21E-01	5.30E-01	7.96E-08
Copper	8.30E-07	3.82E-04	6.35E-05	2.78E-04	3.15E-11	5.05E-04	3.84E-04	4.78E-05	2.10E-04	3.15E-11
Ethane	3.00E-03	2.92E+00	2.29E-01	1.00E+00	1.14E-07	1.82E+00	2.93E+00	1.73E-01	7.58E-01	1.14E-07
Hydrogen sulfide	8.50E-05	7.29E-02	6.50E-03	2.85E-02	3.22E-09	5.17E-02	7.33E-02	4.90E-03	2.15E-02	3.22E-09
Molybdenum	1.10E-06	3.35E-04	8.41E-05	3.68E-04	4.17E-11	6.69E-04	3.37E-04	6.34E-05	2.78E-04	4.17E-11
Phosphorus (Inorganic HAP)	6.40E-07	6.04E-04	4.89E-05	2.14E-04	2.43E-11	3.89E-04	6.07E-04	3.69E-05	1.62E-04	2.43E-11
Vanadium	2.30E-06	1.32E-03	1.76E-04	7.70E-04	8.72E-11	1.40E-03	1.33E-03	1.33E-04	5.81E-04	8.72E-11
Zinc	2.80E-05	1.25E-02	2.14E-03	9.38E-03	1.06E-09	1.70E-02	1.26E-02	1.61E-03	7.07E-03	1.06E-09

*Calculated based on the TABLE 1.4-2. AP 42, Fifth Edition, Volume IChapter 1: External Comb

** All PM (total, Condensable, and filterable) is assumed to be less than 1.0 micrometer in di

Operating hours/year 8760

Emissions Estimation Protocol for Petroleum Refineries, Version 3, RTI International.

Table 4-3. Summary of Emission Factors for Boilers and Process Heaters Firing Various Fuels

		103-H-0302		Fluid Catalytic Cracking (FCC) Unit		Tag	112-H-1201			
		53,050.00		Raw Charge Heater		flue gas (lb/h)	25,145.00		Reactor Charge Heater	
		0.0349		Heat input (MMBtu/h)	28.35	density (lb/ft3)	0.0297		Heat input (MMBtu/h)	1.65
Emission Factors for Boilers and Process Heaters Firing. External Combustion, Natural Gas/Refinery Gas (lb/MMBtu)		1,520,057.31	25334.2884	Emission (lb/h)	Emission (us tpy)	flue gas (ft3/h)	846,633.00	14110.5499	Emission (lb/h)	Emission (us tpy)
		600.1				T (°F)	785			
		588.76				T(K)	691.48			
HAP		Conc. (mg/m3)	Conc. (ppmv)			Conc. (lb/ft3)	Conc. (mg/m3)	Conc. (ppmv)		
Antimony	5.20E-07	3.16E-04	1.25E-04	1.47E-05	6.46E-05	1.74E-11	2.79E-04	1.30E-04	8.58E-07	3.76E-06
Arsenic	2.00E-07	1.22E-04	7.84E-05	5.67E-06	2.48E-05	6.70E-12	1.07E-04	8.13E-05	3.30E-07	1.45E-06
Beryllium	1.30E-07	7.90E-05	4.24E-04	3.69E-06	1.61E-05	4.35E-12	6.98E-05	4.39E-04	2.15E-07	9.40E-07
Cadmium	1.10E-06	6.69E-04	2.87E-04	3.12E-05	1.37E-04	3.68E-11	5.91E-04	2.98E-04	1.82E-06	7.95E-06
Chromium (hexavalent)	2.80E-07	1.70E-04	1.58E-04	7.94E-06	3.48E-05	9.38E-12	1.50E-04	1.64E-04	4.62E-07	2.02E-06
Chromium (total)	1.40E-06	8.51E-04	7.91E-04	3.97E-05	1.74E-04	4.69E-11	7.52E-04	8.20E-04	2.31E-06	1.01E-05
Cobalt	8.20E-08	4.99E-05	4.09E-05	2.32E-06	1.02E-05	2.75E-12	4.40E-05	4.24E-05	1.35E-07	5.93E-07
Manganese	3.70E-07	2.25E-04	1.98E-04	1.05E-05	4.59E-05	1.24E-11	1.99E-04	2.05E-04	6.11E-07	2.67E-06
Mercury	2.50E-07	1.52E-04	3.66E-05	7.09E-06	3.10E-05	8.37E-12	1.34E-04	3.80E-05	4.13E-07	1.81E-06
Nickel	2.10E-06	1.28E-03	1.05E-03	5.95E-05	2.61E-04	7.03E-11	1.13E-03	1.09E-03	3.47E-06	1.52E-05
Selenium	8.80E-07	5.35E-04	3.27E-04	2.49E-05	1.09E-04	2.95E-11	4.72E-04	3.39E-04	1.45E-06	6.36E-06
Total Metal HAPs	**-**	**4.45E-03**		**2.07E-04**	**9.08E-04**	**9.23E-11**	**3.93E-03**		**1.21E-05**	**5.28E-05**
Volatile Organics HAPs		Conc. (mg/m3)	Conc. (ppmv)			Conc. (lb/ft3)	Conc. (mg/m3)	Conc. (ppmv)		
Acetaldehyde	1.20E-05	1.82E-03	2.00E-03	8.51E-05	3.73E-04	1.00E-10	1.61E-03	2.07E-03	4.95E-06	2.17E-05
Acrolein	1.70E-05	2.58E-03	2.23E-03	1.20E-04	5.28E-04	1.42E-10	2.28E-03	2.31E-03	7.01E-06	3.07E-05
Benzene	2.10E-06	3.19E-04	1.97E-04	1.49E-05	6.52E-05	1.76E-11	2.82E-04	2.05E-04	8.66E-07	3.79E-06
Benzo(a)anthracene	2.20E-08	3.34E-06	7.08E-07	1.56E-07	6.83E-07	1.84E-13	2.95E-06	7.34E-07	9.08E-09	3.97E-08
Dichlorobenzene	1.20E-06	1.82E-04	5.99E-05	8.51E-06	3.73E-05	1.00E-11	1.61E-04	6.22E-05	4.95E-07	2.17E-06
Ethylbenzene	1.60E-05	2.43E-03	1.11E-03	1.13E-04	4.97E-04	1.34E-10	2.15E-03	1.15E-03	6.60E-06	2.89E-05
Formaldehyde	7.40E-05	1.12E-02	1.81E-02	5.24E-04	2.30E-03	6.19E-10	9.93E-03	1.88E-02	3.05E-05	1.34E-04
Hexane	1.80E-03	2.74E-01	1.53E-01	1.28E-02	5.59E-02	1.51E-08	2.42E-01	1.59E-01	7.43E-04	3.25E-03
Toluene	3.30E-06	5.02E-04	2.63E-04	2.34E-05	1.02E-04	2.76E-11	4.43E-04	2.73E-04	1.36E-06	5.96E-06
Xylene (total)	2.50E-05	3.80E-03	1.73E-03	1.77E-04	7.76E-04	2.09E-10	3.36E-03	1.79E-03	1.03E-05	4.52E-05
Total VOC HAPs		2.97E-01		1.38E-02	6.06E-02	1.63E-08	2.62E-01		8.05E-04	3.52E-03
Semivolatile and Nonvolatile Organics (excluding dioxin/furans)		Conc. (mg/m3)	Conc. (ppmv)			Conc. (lb/ft3)	Conc. (mg/m3)	Conc. (ppmv)		
Acenaphthene	2.40E-09	3.65E-07	1.14E-07	1.70E-08	7.45E-08	2.01E-14	3.22E-07	1.19E-07	9.90E-10	4.34E-09
Acenaphthylene	6.50E-09	9.88E-07	3.14E-07	4.61E-08	2.02E-07	5.44E-14	8.72E-07	3.25E-07	2.68E-09	1.17E-08
Anthracene	4.70E-09	7.14E-07	1.94E-07	3.33E-08	1.46E-07	3.93E-14	6.31E-07	2.01E-07	1.94E-09	8.49E-09
Benzo(a)pyrene	5.70E-08	8.66E-06	1.66E-06	4.04E-07	1.77E-06	4.77E-13	7.65E-06	1.72E-06	2.35E-08	1.03E-07
Benzo(b)fluoranthene	2.70E-08	4.10E-06	7.86E-07	1.91E-07	8.38E-07	2.26E-13	3.62E-06	8.15E-07	1.11E-08	4.88E-08

Operating hours/year 8760

Emissions Estimation Protocol for Petroleum Refineries, Version 3, RTI International.

Table 4-3. Summary of Emission Factors for Boilers and Process Heaters Firing Various Fuels

		103-H-0302		Fluid Catalytic Cracking (FCC) Unit		Tag	112-H-1201			
		53,050.00		Raw Charge Heater		flue gas (lb/h)	25,145.00		Reactor Charge Heater	
		0.0349		Heat input (MMBtu/h)	28.35	density (lb/ft3)	0.0297		Heat input (MMBtu/h)	1.65
Emission Factors for Boilers and Process Heaters Firing. External Combustion, Natural Gas/Refinery Gas (lb/MMBtu)		1,520,057.31	25334.2884	Emission (lb/h)	Emission (us tpy)	flue gas (ft3/h)	846,633.00	14110.5499	Emission (lb/h)	Emission (us tpy)
		600.1				T (°F)	785			
		588.76				T(K)	691.48			
HAP		Conc. (mg/m3)	Conc. (ppmv)			Conc. (lb/ft3)	Conc. (mg/m3)	Conc. (ppmv)		
Benzo(g,h,i)perylene	1.30E-09	1.98E-07	3.46E-08	9.21E-09	4.04E-08	1.09E-14	1.74E-07	3.58E-08	5.36E-10	2.35E-09
Benzo(k)fluoranthene	1.70E-08	2.58E-06	4.95E-07	1.20E-07	5.28E-07	1.42E-13	2.28E-06	5.13E-07	7.01E-09	3.07E-08
Chrysene	1.60E-09	2.43E-07	5.15E-08	1.13E-08	4.97E-08	1.34E-14	2.15E-07	5.34E-08	6.60E-10	2.89E-09
Dibenz(a,h)anthracene	1.20E-09	1.82E-07	3.17E-08	8.51E-09	3.73E-08	1.00E-14	1.61E-07	3.28E-08	4.95E-10	2.17E-09
7,12-Dimethylbenz(a) anthracene	1.60E-08	2.43E-06	4.58E-07	1.13E-07	4.97E-07	1.34E-13	2.15E-06	4.75E-07	6.60E-09	2.89E-08
Fluoranthene	2.90E-09	4.41E-07	1.05E-07	2.06E-08	9.00E-08	2.43E-14	3.89E-07	1.09E-07	1.20E-09	5.24E-09
Fluorene	2.70E-09	4.10E-07	1.19E-07	1.91E-08	8.38E-08	2.26E-14	3.62E-07	1.24E-07	1.11E-09	4.88E-09
Indeno-(1,2,3cd)pyrene	7.10E-08	1.08E-05	1.89E-06	5.03E-07	2.20E-06	5.94E-13	9.53E-06	1.96E-06	2.93E-08	1.28E-07
3-Methylchloranthrene	1.80E-09	2.74E-07	4.93E-08	1.28E-08	5.59E-08	1.51E-14	2.42E-07	5.11E-08	7.43E-10	3.25E-09
2-Methylnaphthalene	2.40E-08	3.65E-06	1.24E-06	1.70E-07	7.45E-07	2.01E-13	3.22E-06	1.29E-06	9.90E-09	4.34E-08
Naphthalene	6.00E-07	9.12E-05	3.44E-05	4.25E-06	1.86E-05	5.02E-12	8.05E-05	3.56E-05	2.48E-07	1.08E-06
Phenanthrene	1.70E-08	2.58E-06	7.00E-07	1.20E-07	5.28E-07	1.42E-13	2.28E-06	7.26E-07	7.01E-09	3.07E-08
Phenol	4.00E-06	6.08E-04	3.12E-04	2.84E-05	1.24E-04	3.35E-11	5.37E-04	3.24E-04	1.65E-06	7.23E-06
Pyrene	4.90E-09	7.45E-07	1.78E-07	3.47E-08	1.52E-07	4.10E-14	6.58E-07	1.84E-07	2.02E-09	8.85E-09
Sum PAH (without naphthalene)	**4.26E-06**	**6.47E-04**	**3.21E-04**	**3.02E-05**	**1.32E-04**	**3.57E-11**	**5.72E-04**	**3.32E-04**	**1.76E-06**	**7.69E-06**
Total SV-NV Organic HAPs		7.39E-04	3.55E-04	3.44E-05	1.51E-04	4.07E-11	6.52E-04		2.00E-06	8.78E-06
TOTAL ORGANIC HAPS				**1.39E-02**	**6.07E-02**				**8.07E-04**	**3.53E-03**
Other Compounds of Interest		Conc. (mg/m3)	Conc. (ppmv)			Conc. (lb/ft3)	Conc. (mg/m3)	Conc. (ppmv)		
Barium	4.30E-06	2.61E-03	9.20E-04	1.22E-04	5.34E-04	1.44E-10	2.31E-03	9.54E-04	7.10E-06	3.11E-05
Butane	2.10E-03	1.28E+00	1.06E+00	5.95E-02	2.61E-01	7.03E-08	1.13E+00	1.10E+00	3.47E-03	1.52E-02
Copper	8.30E-07	5.05E-04	3.84E-04	2.35E-05	1.03E-04	2.78E-11	4.46E-04	3.98E-04	1.37E-06	6.00E-06
Ethane	3.00E-03	1.82E+00	2.93E+00	8.51E-02	3.73E-01	1.00E-07	1.61E+00	3.04E+00	4.95E-03	2.17E-02
Hydrogen sulfide	8.50E-05	5.17E-02	7.33E-02	2.41E-03	1.06E-02	2.85E-09	4.56E-02	7.60E-02	1.40E-04	6.14E-04
Molybdenum	1.10E-06	6.69E-04	3.37E-04	3.12E-05	1.37E-04	3.68E-11	5.91E-04	3.49E-04	1.82E-06	7.95E-06
Phosphorus (Inorganic HAP)	6.40E-07	3.89E-04	6.07E-04	1.81E-05	7.95E-05	2.14E-11	3.44E-04	6.29E-04	1.06E-06	4.63E-06
Vanadium	2.30E-06	1.40E-03	1.33E-03	6.52E-05	2.86E-04	7.70E-11	1.23E-03	1.38E-03	3.80E-06	1.66E-05
Zinc	2.80E-05	1.70E-02	1.26E-02	7.94E-04	3.48E-03	9.38E-10	1.50E-02	1.30E-02	4.62E-05	2.02E-04

*Calculated based on the TABLE 1.4-2. AP 42, Fifth Edition, Volume IChapter 1: External Comb

** All PM (total, Condensable, and filterable) is assumed to be less than 1.0 micrometer in di

Operating hours/year 8760

		Isomerization Unit								
Emissions Estimation Protocol for Petroleum Refineries, Version 3, RTI International.		flue gas (lb/h)	1463	Tag	Dryer Regeneration Heater		flue gas (lb/h)	3326	Tag	Charge H
Table 4-3. Summary of Emission Factors for Boilers and Process Heaters Firing Various Fuels		density (lb/ft3)	0.0286	117-H-1701	Heat input (MMBtu/h)	3.75	density (lb/ft3)	0.0296	117-H-1702	Heat input (MMBtu/h)
Emission Factors for Boilers and Process Heaters Firing. External Combustion, Natural Gas/Refinery Gas (lb/MMBtu)		flue gas (ft3/h)	51,153.85	852.56	Emission (lb/h)	Emission (us tpy)	flue gas (ft3/h)	112,364.86	1,872.75	Emission (lb/h)
		T (°F)	823.8				T (°F)	787.7		
		T(K)	713.04				T(K)	692.98		
HAP		Conc. (lb/ft3)	Conc. (mg/m3)	Conc. (ppmv)			Conc. (lb/ft3)	Conc. (mg/m3)	Conc. (ppmv)	
Antimony	5.20E-07	1.68E-11	2.69E-04	1.29E-04	1.95E-06	8.54E-06	1.74E-11	2.78E-04	1.30E-04	7.23E-06
Arsenic	2.00E-07	6.45E-12	1.03E-04	8.08E-05	7.50E-07	3.29E-06	6.67E-12	1.07E-04	8.12E-05	2.78E-06
Beryllium	1.30E-07	4.19E-12	6.72E-05	4.37E-04	4.88E-07	2.14E-06	4.34E-12	6.96E-05	4.39E-04	1.81E-06
Cadmium	1.10E-06	3.55E-11	5.69E-04	2.96E-04	4.13E-06	1.81E-05	3.67E-11	5.89E-04	2.98E-04	1.53E-05
Chromium (hexavalent)	2.80E-07	9.03E-12	1.45E-04	1.63E-04	1.05E-06	4.60E-06	9.34E-12	1.50E-04	1.64E-04	3.89E-06
Chromium (total)	1.40E-06	4.52E-11	7.24E-04	8.15E-04	5.25E-06	2.30E-05	4.67E-11	7.49E-04	8.19E-04	1.95E-05
Cobalt	8.20E-08	2.64E-12	4.24E-05	4.21E-05	3.08E-07	1.35E-06	2.74E-12	4.39E-05	4.23E-05	1.14E-06
Manganese	3.70E-07	1.19E-11	1.91E-04	2.04E-04	1.39E-06	6.08E-06	1.23E-11	1.98E-04	2.05E-04	5.14E-06
Mercury	2.50E-07	8.06E-12	1.29E-04	3.77E-05	9.38E-07	4.11E-06	8.34E-12	1.34E-04	3.79E-05	3.48E-06
Nickel	2.10E-06	6.77E-11	1.09E-03	1.08E-03	7.88E-06	3.45E-05	7.01E-11	1.12E-03	1.09E-03	2.92E-05
Selenium	8.80E-07	2.84E-11	4.55E-04	3.37E-04	3.30E-06	1.45E-05	2.94E-11	4.71E-04	3.39E-04	1.22E-05
Total Metal HAPs	**-**	**5.37E-12**	**3.78E-03**		**2.74E-05**	**1.20E-04**	**1.22E-11**	**3.91E-03**		**1.02E-04**
Volatile Organics HAPs		Conc. (lb/ft3)	Conc. (mg/m3)	Conc. (ppmv)			Conc. (lb/ft3)	Conc. (mg/m3)	Conc. (ppmv)	
Acetaldehyde	1.20E-05	9.68E-11	1.55E-03	2.06E-03	1.13E-05	4.93E-05	1.00E-10	1.61E-03	2.07E-03	4.17E-05
Acrolein	1.70E-05	1.37E-10	2.20E-03	2.29E-03	1.59E-05	6.98E-05	1.42E-10	2.27E-03	2.31E-03	5.91E-05
Benzene	2.10E-06	1.69E-11	2.72E-04	2.03E-04	1.97E-06	8.62E-06	1.75E-11	2.81E-04	2.04E-04	7.30E-06
Benzo(a)anthracene	2.20E-08	1.77E-13	2.84E-06	7.29E-07	2.06E-08	9.03E-08	1.84E-13	2.94E-06	7.33E-07	7.65E-08
Dichlorobenzene	1.20E-06	9.68E-12	1.55E-04	6.17E-05	1.13E-06	4.93E-06	1.00E-11	1.61E-04	6.21E-05	4.17E-06
Ethylbenzene	1.60E-05	1.29E-10	2.07E-03	1.14E-03	1.50E-05	6.57E-05	1.33E-10	2.14E-03	1.15E-03	5.56E-05
Formaldehyde	7.40E-05	5.97E-10	9.57E-03	1.86E-02	6.94E-05	3.04E-04	6.17E-10	9.90E-03	1.87E-02	2.57E-04
Hexane	1.80E-03	1.45E-08	2.33E-01	1.58E-01	1.69E-03	7.39E-03	1.50E-08	2.41E-01	1.59E-01	6.26E-03
Toluene	3.30E-06	2.66E-11	4.27E-04	2.71E-04	3.09E-06	1.36E-05	2.75E-11	4.41E-04	2.72E-04	1.15E-05
Xylene (total)	2.50E-05	2.02E-10	3.23E-03	1.78E-03	2.34E-05	1.03E-04	2.09E-10	3.34E-03	1.79E-03	8.69E-05
Total VOC HAPs		1.57E-08	2.52E-01		1.83E-03	8.01E-03	1.63E-08	2.61E-01		6.78E-03
Semivolatile and Nonvolatile Organics (excluding dioxin/furans)		Conc. (lb/ft3)	Conc. (mg/m3)	Conc. (ppmv)			Conc. (lb/ft3)	Conc. (mg/m3)	Conc. (ppmv)	
Acenaphthene	2.40E-09	1.94E-14	3.10E-07	1.18E-07	2.25E-09	9.86E-09	2.00E-14	3.21E-07	1.18E-07	8.34E-09
Acenaphthylene	6.50E-09	5.24E-14	8.40E-07	3.23E-07	6.09E-09	2.67E-08	5.42E-14	8.69E-07	3.25E-07	2.26E-08
Anthracene	4.70E-09	3.79E-14	6.08E-07	1.99E-07	4.41E-09	1.93E-08	3.92E-14	6.29E-07	2.01E-07	1.63E-08
Benzo(a)pyrene	5.70E-08	4.60E-13	7.37E-06	1.71E-06	5.34E-08	2.34E-07	4.76E-13	7.62E-06	1.72E-06	1.98E-07
Benzo(b)fluoranthene	2.70E-08	2.18E-13	3.49E-06	8.09E-07	2.53E-08	1.11E-07	2.25E-13	3.61E-06	8.14E-07	9.38E-08

Operating hours/year 8760

Emissions Estimation Protocol for Petroleum Refineries, Version 3, RTI International.		Isomerization Unit								
		flue gas (lb/h)	1463	Tag	Dryer Regeneration Heater		flue gas (lb/h)	3326	Tag	Charge H
Table 4-3. Summary of Emission Factors for Boilers and Process Heaters Firing Various Fuels		density (lb/ft3)	0.0286	117-H-1701	Heat input (MMBtu/h)	3.75	density (lb/ft3)	0.0296	117-H-1702	Heat input (MMBtu/h)
Emission Factors for Boilers and Process Heaters Firing. External Combustion, Natural Gas/Refinery Gas (lb/MMBtu)		flue gas (ft3/h)	51,153.85	852.56	Emission (lb/h)	Emission (us tpy)	flue gas (ft3/h)	112,364.86	1,872.75	Emission (lb/h)
		T (°F)	823.8				T (°F)	787.7		
		T(K)	713.04				T(K)	692.98		
HAP		Conc. (lb/ft3)	Conc. (mg/m3)	Conc. (ppmv)			Conc. (lb/ft3)	Conc. (mg/m3)	Conc. (ppmv)	
Benzo(g,h,i)perylene	1.30E-09	1.05E-14	1.68E-07	3.56E-08	1.22E-09	5.34E-09	1.08E-14	1.74E-07	3.58E-08	4.52E-09
Benzo(k)fluoranthene	1.70E-08	1.37E-13	2.20E-06	5.10E-07	1.59E-08	6.98E-08	1.42E-13	2.27E-06	5.12E-07	5.91E-08
Chrysene	1.60E-09	1.29E-14	2.07E-07	5.30E-08	1.50E-09	6.57E-09	1.33E-14	2.14E-07	5.33E-08	5.56E-09
Dibenz(a,h)anthracene	1.20E-09	9.68E-15	1.55E-07	3.26E-08	1.13E-09	4.93E-09	1.00E-14	1.61E-07	3.28E-08	4.17E-09
7,12-Dimethylbenz(a) anthracene	1.60E-08	1.29E-13	2.07E-06	4.72E-07	1.50E-08	6.57E-08	1.33E-13	2.14E-06	4.75E-07	5.56E-08
Fluoranthene	2.90E-09	2.34E-14	3.75E-07	1.08E-07	2.72E-09	1.19E-08	2.42E-14	3.88E-07	1.09E-07	1.01E-08
Fluorene	2.70E-09	2.18E-14	3.49E-07	1.23E-07	2.53E-09	1.11E-08	2.25E-14	3.61E-07	1.24E-07	9.38E-09
Indeno-(1,2,3cd)pyrene	7.10E-08	5.73E-13	9.18E-06	1.94E-06	6.66E-08	2.92E-07	5.92E-13	9.50E-06	1.95E-06	2.47E-07
3-Methylchloranthrene	1.80E-09	1.45E-14	2.33E-07	5.07E-08	1.69E-09	7.39E-09	1.50E-14	2.41E-07	5.10E-08	6.26E-09
2-Methylnaphthalene	2.40E-08	1.94E-13	3.10E-06	1.28E-06	2.25E-08	9.86E-08	2.00E-13	3.21E-06	1.28E-06	8.34E-08
Naphthalene	6.00E-07	4.84E-12	7.76E-05	3.54E-05	5.63E-07	2.46E-06	5.01E-12	8.03E-05	3.56E-05	2.09E-06
Phenanthrene	1.70E-08	1.37E-13	2.20E-06	7.21E-07	1.59E-08	6.98E-08	1.42E-13	2.27E-06	7.25E-07	5.91E-08
Phenol	4.00E-06	3.23E-11	5.17E-04	3.21E-04	3.75E-06	1.64E-05	3.34E-11	5.35E-04	3.23E-04	1.39E-05
Pyrene	4.90E-09	3.95E-14	6.34E-07	1.83E-07	4.59E-09	2.01E-08	4.09E-14	6.55E-07	1.84E-07	1.70E-08
Sum PAH (without naphthalene)	**4.26E-06**	**3.43E-11**	**5.51E-04**	**3.30E-04**	**3.99E-06**	**1.75E-05**	**3.55E-11**	**5.70E-04**	**3.32E-04**	**1.48E-05**
Total SV-NV Organic HAPs		3.92E-11	6.28E-04		4.56E-06	2.00E-05	4.05E-11	6.50E-04		1.69E-05
TOTAL ORGANIC HAPS					**1.83E-03**	**8.03E-03**				**6.80E-03**
Other Compounds of Interest		Conc. (lb/ft3)	Conc. (mg/m3)	Conc. (ppmv)			Conc. (lb/ft3)	Conc. (mg/m3)	Conc. (ppmv)	
Barium	4.30E-06	1.39E-10	2.22E-03	9.47E-04	1.61E-05	7.06E-05	1.44E-10	2.30E-03	9.53E-04	5.98E-05
Butane	2.10E-03	6.77E-08	1.09E+00	1.09E+00	7.88E-03	3.45E-02	7.01E-08	1.12E+00	1.10E+00	2.92E-02
Copper	8.30E-07	2.68E-11	4.29E-04	3.95E-04	3.11E-06	1.36E-05	2.77E-11	4.44E-04	3.97E-04	1.15E-05
Ethane	3.00E-03	9.68E-08	1.55E+00	3.02E+00	1.13E-02	4.93E-02	1.00E-07	1.61E+00	3.04E+00	4.17E-02
Hydrogen sulfide	8.50E-05	2.74E-09	4.40E-02	7.55E-02	3.19E-04	1.40E-03	2.84E-09	4.55E-02	7.59E-02	1.18E-03
Molybdenum	1.10E-06	3.55E-11	5.69E-04	3.47E-04	4.13E-06	1.81E-05	3.67E-11	5.89E-04	3.49E-04	1.53E-05
Phosphorus (Inorganic HAP)	6.40E-07	2.06E-11	3.31E-04	6.25E-04	2.40E-06	1.05E-05	2.14E-11	3.42E-04	6.29E-04	8.90E-06
Vanadium	2.30E-06	7.42E-11	1.19E-03	1.37E-03	8.63E-06	3.78E-05	7.68E-11	1.23E-03	1.37E-03	3.20E-05
Zinc	2.80E-05	9.03E-10	1.45E-02	1.30E-02	1.05E-04	4.60E-04	9.34E-10	1.50E-02	1.30E-02	3.89E-04

*Calculated based on the TABLE 1.4-2. AP 42, Fifth Edition, Volume IChapter 1: External Comb

** All PM (total, Condensable, and filterable) is assumed to be less than 1.0 micrometer in di

Operating hours/year 8760

		Light Naphtha Hydrotreater				Catalytic Reformer Unit #2				
Emissions Estimation Protocol for Petroleum Refineries, Version 3, RTI International.		eater	flue gas (lb/h)	12,328.00	Tag	Reformer Heater 1		flue gas (lb/h)	37,012.00	Tag
Table 4-3. Summary of Emission Factors for Boilers and Process Heaters Firing Various Fuels		13.9	density (lb/ft3)	0.03	111-H-1101	Heat input (MMBtu/h)	41.73	density (lb/ft3)	0.03	106-H-0601
Emission Factors for Boilers and Process Heaters Firing. External Combustion, Natural Gas/Refinery Gas (lb/MMBtu)		Emission (us tpy)	flue gas (ft3/h)	417,898.31	6,964.97	Emission (lb/h)	Emission (us tpy)	flue gas (ft3/h)	1,246,195.29	20,769.92
			T (°F)	793.1				T (°F)	786.2	
			T(K)	695.98				T(K)	692.15	
HAP			Conc. (lb/ft3)	Conc. (mg/m3)	Conc. (ppmv)			Conc. (lb/ft3)	Conc. (mg/m3)	Conc. (ppmv)
Antimony	5.20E-07	3.17E-05	1.73E-11	2.77E-04	1.30E-04	2.17E-05	9.50E-05	1.74E-11	2.79E-04	1.30E-04
Arsenic	2.00E-07	1.22E-05	6.65E-12	1.07E-04	8.13E-05	8.35E-06	3.66E-05	6.70E-12	1.07E-04	8.14E-05
Beryllium	1.30E-07	7.91E-06	4.32E-12	6.93E-05	4.39E-04	5.42E-06	2.38E-05	4.35E-12	6.98E-05	4.40E-04
Cadmium	1.10E-06	6.70E-05	3.66E-11	5.87E-04	2.98E-04	4.59E-05	2.01E-04	3.68E-11	5.91E-04	2.98E-04
Chromium (hexavalent)	2.80E-07	1.70E-05	9.31E-12	1.49E-04	1.64E-04	1.17E-05	5.12E-05	9.38E-12	1.50E-04	1.64E-04
Chromium (total)	1.40E-06	8.52E-05	4.66E-11	7.47E-04	8.20E-04	5.84E-05	2.56E-04	4.69E-11	7.52E-04	8.21E-04
Cobalt	8.20E-08	4.99E-06	2.73E-12	4.37E-05	4.24E-05	3.42E-06	1.50E-05	2.75E-12	4.40E-05	4.24E-05
Manganese	3.70E-07	2.25E-05	1.23E-11	1.97E-04	2.05E-04	1.54E-05	6.76E-05	1.24E-11	1.99E-04	2.05E-04
Mercury	2.50E-07	1.52E-05	8.32E-12	1.33E-04	3.80E-05	1.04E-05	4.57E-05	8.37E-12	1.34E-04	3.80E-05
Nickel	2.10E-06	1.28E-04	6.98E-11	1.12E-03	1.09E-03	8.76E-05	3.84E-04	7.03E-11	1.13E-03	1.09E-03
Selenium	8.80E-07	5.36E-05	2.93E-11	4.69E-04	3.39E-04	3.67E-05	1.61E-04	2.95E-11	4.72E-04	3.40E-04
Total Metal HAPs	**-**	**4.45E-04**	**4.53E-11**	**3.90E-03**		**3.05E-04**	**1.34E-03**	**1.36E-10**	**3.93E-03**	
Volatile Organics HAPs			Conc. (lb/ft3)	Conc. (mg/m3)	Conc. (ppmv)			Conc. (lb/ft3)	Conc. (mg/m3)	Conc. (ppmv)
Acetaldehyde	1.20E-05	1.83E-04	9.98E-11	1.60E-03	2.07E-03	1.25E-04	5.48E-04	1.00E-10	1.61E-03	2.08E-03
Acrolein	1.70E-05	2.59E-04	1.41E-10	2.27E-03	2.31E-03	1.77E-04	7.77E-04	1.42E-10	2.28E-03	2.31E-03
Benzene	2.10E-06	3.20E-05	1.75E-11	2.80E-04	2.05E-04	2.19E-05	9.60E-05	1.76E-11	2.82E-04	2.05E-04
Benzo(a)anthracene	2.20E-08	3.35E-07	1.83E-13	2.93E-06	7.34E-07	2.30E-07	1.01E-06	1.84E-13	2.95E-06	7.35E-07
Dichlorobenzene	1.20E-06	1.83E-05	9.98E-12	1.60E-04	6.21E-05	1.25E-05	5.48E-05	1.00E-11	1.61E-04	6.22E-05
Ethylbenzene	1.60E-05	2.44E-04	1.33E-10	2.13E-03	1.15E-03	1.67E-04	7.31E-04	1.34E-10	2.15E-03	1.15E-03
Formaldehyde	7.40E-05	1.13E-03	6.15E-10	9.87E-03	1.88E-02	7.72E-04	3.38E-03	6.19E-10	9.93E-03	1.88E-02
Hexane	1.80E-03	2.74E-02	1.50E-08	2.40E-01	1.59E-01	1.88E-02	8.22E-02	1.51E-08	2.42E-01	1.59E-01
Toluene	3.30E-06	5.02E-05	2.74E-11	4.40E-04	2.73E-04	3.44E-05	1.51E-04	2.76E-11	4.43E-04	2.73E-04
Xylene (total)	2.50E-05	3.81E-04	2.08E-10	3.33E-03	1.79E-03	2.61E-04	1.14E-03	2.09E-10	3.36E-03	1.80E-03
Total VOC HAPs		2.97E-02	1.62E-08	2.60E-01		2.03E-02	8.91E-02	1.63E-08	2.62E-01	
Semivolatile and Nonvolatile Organics (excluding dioxin/furans)			Conc. (lb/ft3)	Conc. (mg/m3)	Conc. (ppmv)			Conc. (lb/ft3)	Conc. (mg/m3)	Conc. (ppmv)
Acenaphthene	2.40E-09	3.65E-08	2.00E-14	3.20E-07	1.18E-07	2.50E-08	1.10E-07	2.01E-14	3.22E-07	1.19E-07
Acenaphthylene	6.50E-09	9.89E-08	5.41E-14	8.67E-07	3.25E-07	6.78E-08	2.97E-07	5.44E-14	8.72E-07	3.26E-07
Anthracene	4.70E-09	7.15E-08	3.91E-14	6.27E-07	2.01E-07	4.90E-08	2.15E-07	3.93E-14	6.31E-07	2.01E-07
Benzo(a)pyrene	5.70E-08	8.68E-07	4.74E-13	7.60E-06	1.72E-06	5.95E-07	2.60E-06	4.77E-13	7.65E-06	1.72E-06
Benzo(b)fluoranthene	2.70E-08	4.11E-07	2.25E-13	3.60E-06	8.15E-07	2.82E-07	1.23E-06	2.26E-13	3.62E-06	8.16E-07

Operating hours/year 8760

Emissions Estimation Protocol for Petroleum Refineries, Version 3, RTI International.

Table 4-3. Summary of Emission Factors for Boilers and Process Heaters Firing Various Fuels

		Light Naphtha Hydrotreater				Catalytic Reformer Unit #2				
		eater	flue gas (lb/h)	12,328.00	Tag	Reformer Heater 1		flue gas (lb/h)	37,012.00	Tag
		13.9	density (lb/ft3)	0.03	111-H-1101	Heat input (MMBtu/h)	41.73	density (lb/ft3)	0.03	106-H-0601
Emission Factors for Boilers and Process Heaters Firing. External Combustion, Natural Gas/Refinery Gas (lb/MMBtu)		Emission (us tpy)	flue gas (ft3/h)	417,898.31	6,964.97	Emission (lb/h)	Emission (us tpy)	flue gas (ft3/h)	1,246,195.29	20,769.92
			T (°F)	793.1				T (°F)	786.2	
			T(K)	695.98				T(K)	692.15	
HAP			Conc. (lb/ft3)	Conc. (mg/m3)	Conc. (ppmv)			Conc. (lb/ft3)	Conc. (mg/m3)	Conc. (ppmv)
Benzo(g,h,i)perylene	1.30E-09	1.98E-08	1.08E-14	1.73E-07	3.58E-08	1.36E-08	5.94E-08	1.09E-14	1.74E-07	3.59E-08
Benzo(k)fluoranthene	1.70E-08	2.59E-07	1.41E-13	2.27E-06	5.13E-07	1.77E-07	7.77E-07	1.42E-13	2.28E-06	5.14E-07
Chrysene	1.60E-09	2.44E-08	1.33E-14	2.13E-07	5.34E-08	1.67E-08	7.31E-08	1.34E-14	2.15E-07	5.34E-08
Dibenz(a,h)anthracene	1.20E-09	1.83E-08	9.98E-15	1.60E-07	3.28E-08	1.25E-08	5.48E-08	1.00E-14	1.61E-07	3.29E-08
7,12-Dimethylbenz(a) anthracene	1.60E-08	2.44E-07	1.33E-13	2.13E-06	4.75E-07	1.67E-07	7.31E-07	1.34E-13	2.15E-06	4.76E-07
Fluoranthene	2.90E-09	4.41E-08	2.41E-14	3.87E-07	1.09E-07	3.03E-08	1.33E-07	2.43E-14	3.89E-07	1.09E-07
Fluorene	2.70E-09	4.11E-08	2.25E-14	3.60E-07	1.24E-07	2.82E-08	1.23E-07	2.26E-14	3.62E-07	1.24E-07
Indeno-(1,2,3cd)pyrene	7.10E-08	1.08E-06	5.90E-13	9.47E-06	1.96E-06	7.41E-07	3.24E-06	5.94E-13	9.53E-06	1.96E-06
3-Methylchloranthrene	1.80E-09	2.74E-08	1.50E-14	2.40E-07	5.11E-08	1.88E-08	8.22E-08	1.51E-14	2.42E-07	5.11E-08
2-Methylnaphthalene	2.40E-08	3.65E-07	2.00E-13	3.20E-06	1.29E-06	2.50E-07	1.10E-06	2.01E-13	3.22E-06	1.29E-06
Naphthalene	6.00E-07	9.13E-06	4.99E-12	8.00E-05	3.56E-05	6.26E-06	2.74E-05	5.02E-12	8.05E-05	3.57E-05
Phenanthrene	1.70E-08	2.59E-07	1.41E-13	2.27E-06	7.26E-07	1.77E-07	7.77E-07	1.42E-13	2.28E-06	7.27E-07
Phenol	4.00E-06	6.09E-05	3.33E-11	5.33E-04	3.24E-04	4.17E-05	1.83E-04	3.35E-11	5.37E-04	3.24E-04
Pyrene	4.90E-09	7.46E-08	4.07E-14	6.53E-07	1.84E-07	5.11E-08	2.24E-07	4.10E-14	6.58E-07	1.85E-07
Sum PAH (without naphthalene)	**4.26E-06**	**6.48E-05**	**3.54E-11**	**5.68E-04**	**3.32E-04**	**4.44E-05**	**1.95E-04**	**3.57E-11**	**5.72E-04**	**3.33E-04**
Total SV-NV Organic HAPs		7.40E-05	4.04E-11	6.48E-04		5.07E-05	2.22E-04	4.07E-11	6.52E-04	
TOTAL ORGANIC HAPS		**2.98E-02**				**2.04E-02**	**8.94E-02**			
Other Compounds of Interest			Conc. (lb/ft3)	Conc. (mg/m3)	Conc. (ppmv)			Conc. (lb/ft3)	Conc. (mg/m3)	Conc. (ppmv)
Barium	4.30E-06	2.62E-04	1.43E-10	2.29E-03	9.54E-04	1.79E-04	7.86E-04	1.44E-10	2.31E-03	9.55E-04
Butane	2.10E-03	1.28E-01	6.98E-08	1.12E+00	1.10E+00	8.76E-02	3.84E-01	7.03E-08	1.13E+00	1.10E+00
Copper	8.30E-07	5.05E-05	2.76E-11	4.43E-04	3.98E-04	3.46E-05	1.52E-04	2.78E-11	4.46E-04	3.98E-04
Ethane	3.00E-03	1.83E-01	9.98E-08	1.60E+00	3.04E+00	1.25E-01	5.48E-01	1.00E-07	1.61E+00	3.04E+00
Hydrogen sulfide	8.50E-05	5.17E-03	2.83E-09	4.53E-02	7.60E-02	3.55E-03	1.55E-02	2.85E-09	4.56E-02	7.60E-02
Molybdenum	1.10E-06	6.70E-05	3.66E-11	5.87E-04	3.49E-04	4.59E-05	2.01E-04	3.68E-11	5.91E-04	3.50E-04
Phosphorus (Inorganic HAP)	6.40E-07	3.90E-05	2.13E-11	3.41E-04	6.29E-04	2.67E-05	1.17E-04	2.14E-11	3.44E-04	6.30E-04
Vanadium	2.30E-06	1.40E-04	7.65E-11	1.23E-03	1.37E-03	9.60E-05	4.20E-04	7.70E-11	1.23E-03	1.38E-03
Zinc	2.80E-05	1.70E-03	9.31E-10	1.49E-02	1.30E-02	1.17E-03	5.12E-03	9.38E-10	1.50E-02	1.31E-02

*Calculated based on the TABLE 1.4-2. AP 42, Fifth Edition, Volume IChapter 1: External Comb

** All PM (total, Condensable, and filterable) is assumed to be less than 1.0 micrometer in di

Operating hours/year 8760

Emissions Estimation Protocol for Petroleum Refineries, Version 3, RTI International.

Table 4-3. Summary of Emission Factors for Boilers and Process Heaters Firing Various Fuels

		Catalytic Reformer Unit #1					Diesel Hydrotreater			
		Reformer Heater 1		flue gas (lb/h)	82,042.00	Tag	Reactor Charge Heater		flue gas (lb/h)	15,342.00
		Heat input (MMBtu/h)	92.5	density (lb/ft3)	0.03	107-H-0701	Heat input (MMBtu/h)	16.25	density (lb/ft3)	0.03
Emission Factors for Boilers and Process Heaters Firing. External Combustion, Natural Gas/Refinery Gas (lb/MMBtu)		Emission (lb/h)	Emission (us tpy)	flue gas (ft3/h)	2,771,689.19	46,194.82	Emission (lb/h)	Emission (us tpy)	flue gas (ft3/h)	485,506.33
				T (°F)	787.7				T (°F)	764.3
				T(K)	692.98				T(K)	679.98
HAP				Conc. (lb/ft3)	Conc. (mg/m3)	Conc. (ppmv)			Conc. (lb/ft3)	Conc. (mg/m3)
Antimony	5.20E-07	4.81E-05	2.11E-04	1.74E-11	2.78E-04	1.30E-04	8.45E-06	3.70E-05	1.74E-11	2.79E-04
Arsenic	2.00E-07	1.85E-05	8.10E-05	6.67E-12	1.07E-04	8.12E-05	3.25E-06	1.42E-05	6.69E-12	1.07E-04
Beryllium	1.30E-07	1.20E-05	5.27E-05	4.34E-12	6.96E-05	4.39E-04	2.11E-06	9.25E-06	4.35E-12	6.98E-05
Cadmium	1.10E-06	1.02E-04	4.46E-04	3.67E-11	5.89E-04	2.98E-04	1.79E-05	7.83E-05	3.68E-11	5.90E-04
Chromium (hexavalent)	2.80E-07	2.59E-05	1.13E-04	9.34E-12	1.50E-04	1.64E-04	4.55E-06	1.99E-05	9.37E-12	1.50E-04
Chromium (total)	1.40E-06	1.30E-04	5.67E-04	4.67E-11	7.49E-04	8.19E-04	2.28E-05	9.96E-05	4.69E-11	7.51E-04
Cobalt	8.20E-08	7.59E-06	3.32E-05	2.74E-12	4.39E-05	4.23E-05	1.33E-06	5.84E-06	2.74E-12	4.40E-05
Manganese	3.70E-07	3.42E-05	1.50E-04	1.23E-11	1.98E-04	2.05E-04	6.01E-06	2.63E-05	1.24E-11	1.99E-04
Mercury	2.50E-07	2.31E-05	1.01E-04	8.34E-12	1.34E-04	3.79E-05	4.06E-06	1.78E-05	8.37E-12	1.34E-04
Nickel	2.10E-06	1.94E-04	8.51E-04	7.01E-11	1.12E-03	1.09E-03	3.41E-05	1.49E-04	7.03E-11	1.13E-03
Selenium	8.80E-07	8.14E-05	3.57E-04	2.94E-11	4.71E-04	3.39E-04	1.43E-05	6.26E-05	2.95E-11	4.72E-04
Total Metal HAPs	**-**	**6.76E-04**	**2.96E-03**	**3.01E-10**	**3.91E-03**		**1.19E-04**	**5.20E-04**	**5.29E-11**	**3.92E-03**
Volatile Organics HAPs				Conc. (lb/ft3)	Conc. (mg/m3)	Conc. (ppmv)			Conc. (lb/ft3)	Conc. (mg/m3)
Acetaldehyde	1.20E-05	2.78E-04	1.22E-03	1.00E-10	1.61E-03	2.07E-03	4.88E-05	2.14E-04	1.00E-10	1.61E-03
Acrolein	1.70E-05	3.93E-04	1.72E-03	1.42E-10	2.27E-03	2.31E-03	6.91E-05	3.02E-04	1.42E-10	2.28E-03
Benzene	2.10E-06	4.86E-05	2.13E-04	1.75E-11	2.81E-04	2.04E-04	8.53E-06	3.74E-05	1.76E-11	2.82E-04
Benzo(a)anthracene	2.20E-08	5.09E-07	2.23E-06	1.84E-13	2.94E-06	7.33E-07	8.94E-08	3.91E-07	1.84E-13	2.95E-06
Dichlorobenzene	1.20E-06	2.78E-05	1.22E-04	1.00E-11	1.61E-04	6.21E-05	4.88E-06	2.14E-05	1.00E-11	1.61E-04
Ethylbenzene	1.60E-05	3.70E-04	1.62E-03	1.33E-10	2.14E-03	1.15E-03	6.50E-05	2.85E-04	1.34E-10	2.15E-03
Formaldehyde	7.40E-05	1.71E-03	7.50E-03	6.17E-10	9.90E-03	1.87E-02	3.01E-04	1.32E-03	6.19E-10	9.93E-03
Hexane	1.80E-03	4.16E-02	1.82E-01	1.50E-08	2.41E-01	1.59E-01	7.31E-03	3.20E-02	1.51E-08	2.41E-01
Toluene	3.30E-06	7.63E-05	3.34E-04	2.75E-11	4.41E-04	2.72E-04	1.34E-05	5.87E-05	2.76E-11	4.43E-04
Xylene (total)	2.50E-05	5.78E-04	2.53E-03	2.09E-10	3.34E-03	1.79E-03	1.02E-04	4.45E-04	2.09E-10	3.35E-03
Total VOC HAPs		4.51E-02	1.98E-01	1.63E-08	2.61E-01		7.92E-03	3.47E-02	1.63E-08	2.62E-01
Semivolatile and Nonvolatile Organics (excluding dioxin/furans)				Conc. (lb/ft3)	Conc. (mg/m3)	Conc. (ppmv)			Conc. (lb/ft3)	Conc. (mg/m3)
Acenaphthene	2.40E-09	5.55E-08	2.43E-07	2.00E-14	3.21E-07	1.18E-07	9.75E-09	4.27E-08	2.01E-14	3.22E-07
Acenaphthylene	6.50E-09	1.50E-07	6.58E-07	5.42E-14	8.69E-07	3.25E-07	2.64E-08	1.16E-07	5.44E-14	8.72E-07
Anthracene	4.70E-09	1.09E-07	4.76E-07	3.92E-14	6.29E-07	2.01E-07	1.91E-08	8.36E-08	3.93E-14	6.31E-07
Benzo(a)pyrene	5.70E-08	1.32E-06	5.77E-06	4.76E-13	7.62E-06	1.72E-06	2.32E-07	1.01E-06	4.77E-13	7.65E-06
Benzo(b)fluoranthene	2.70E-08	6.24E-07	2.73E-06	2.25E-13	3.61E-06	8.14E-07	1.10E-07	4.80E-07	2.26E-13	3.62E-06

Operating hours/year 8760

Emissions Estimation Protocol for Petroleum Refineries, Version 3, RTI International.

Table 4-3. Summary of Emission Factors for Boilers and Process Heaters Firing Various Fuels

		Catalytic Reformer Unit #1					Diesel Hydrotreater			
		Reformer Heater 1		flue gas (lb/h)	82,042.00	Tag	Reactor Charge Heater		flue gas (lb/h)	15,342.00
		Heat input (MMBtu/h)	92.5	density (lb/ft3)	0.03	107-H-0701	Heat input (MMBtu/h)	16.25	density (lb/ft3)	0.03
Emission Factors for Boilers and Process Heaters Firing. External Combustion, Natural Gas/Refinery Gas (lb/MMBtu)		Emission (lb/h)	Emission (us tpy)	flue gas (ft3/h)	2,771,689.19	46,194.82	Emission (lb/h)	Emission (us tpy)	flue gas (ft3/h)	485,506.33
				T (°F)	787.7				T (°F)	764.3
				T(K)	692.98				T(K)	679.98
HAP				Conc. (lb/ft3)	Conc. (mg/m3)	Conc. (ppmv)			Conc. (lb/ft3)	Conc. (mg/m3)
Benzo(g,h,i)perylene	1.30E-09	3.01E-08	1.32E-07	1.08E-14	1.74E-07	3.58E-08	5.28E-09	2.31E-08	1.09E-14	1.74E-07
Benzo(k)fluoranthene	1.70E-08	3.93E-07	1.72E-06	1.42E-13	2.27E-06	5.12E-07	6.91E-08	3.02E-07	1.42E-13	2.28E-06
Chrysene	1.60E-09	3.70E-08	1.62E-07	1.33E-14	2.14E-07	5.33E-08	6.50E-09	2.85E-08	1.34E-14	2.15E-07
Dibenz(a,h)anthracene	1.20E-09	2.78E-08	1.22E-07	1.00E-14	1.61E-07	3.28E-08	4.88E-09	2.14E-08	1.00E-14	1.61E-07
7,12-Dimethylbenz(a) anthracene	1.60E-08	3.70E-07	1.62E-06	1.33E-13	2.14E-06	4.75E-07	6.50E-08	2.85E-07	1.34E-13	2.15E-06
Fluoranthene	2.90E-09	6.71E-08	2.94E-07	2.42E-14	3.88E-07	1.09E-07	1.18E-08	5.16E-08	2.43E-14	3.89E-07
Fluorene	2.70E-09	6.24E-08	2.73E-07	2.25E-14	3.61E-07	1.24E-07	1.10E-08	4.80E-08	2.26E-14	3.62E-07
Indeno-(1,2,3cd)pyrene	7.10E-08	1.64E-06	7.19E-06	5.92E-13	9.50E-06	1.95E-06	2.88E-07	1.26E-06	5.94E-13	9.53E-06
3-Methylchloranthrene	1.80E-09	4.16E-08	1.82E-07	1.50E-14	2.41E-07	5.10E-08	7.31E-09	3.20E-08	1.51E-14	2.41E-07
2-Methylnaphthalene	2.40E-08	5.55E-07	2.43E-06	2.00E-13	3.21E-06	1.28E-06	9.75E-08	4.27E-07	2.01E-13	3.22E-06
Naphthalene	6.00E-07	1.39E-05	6.08E-05	5.01E-12	8.03E-05	3.56E-05	2.44E-06	1.07E-05	5.02E-12	8.05E-05
Phenanthrene	1.70E-08	3.93E-07	1.72E-06	1.42E-13	2.27E-06	7.25E-07	6.91E-08	3.02E-07	1.42E-13	2.28E-06
Phenol	4.00E-06	9.25E-05	4.05E-04	3.34E-11	5.35E-04	3.23E-04	1.63E-05	7.12E-05	3.35E-11	5.37E-04
Pyrene	4.90E-09	1.13E-07	4.96E-07	4.09E-14	6.55E-07	1.84E-07	1.99E-08	8.72E-08	4.10E-14	6.57E-07
Sum PAH (without naphthalene)	**4.26E-06**	**9.85E-05**	**4.31E-04**	**3.55E-11**	**5.70E-04**	**3.32E-04**	**1.73E-05**	**7.58E-05**	**3.56E-11**	**5.71E-04**
Total SV-NV Organic HAPs		1.12E-04	4.92E-04	4.05E-11	6.50E-04		1.97E-05	8.65E-05	4.07E-11	6.52E-04
TOTAL ORGANIC HAPS		**4.52E-02**	**1.98E-01**				**7.94E-03**	**3.48E-02**		
Other Compounds of Interest				Conc. (lb/ft3)	Conc. (mg/m3)	Conc. (ppmv)			Conc. (lb/ft3)	Conc. (mg/m3)
Barium	4.30E-06	3.98E-04	1.74E-03	1.44E-10	2.30E-03	9.53E-04	6.99E-05	3.06E-04	1.44E-10	2.31E-03
Butane	2.10E-03	1.94E-01	8.51E-01	7.01E-08	1.12E+00	1.10E+00	3.41E-02	1.49E-01	7.03E-08	1.13E+00
Copper	8.30E-07	7.68E-05	3.36E-04	2.77E-11	4.44E-04	3.97E-04	1.35E-05	5.91E-05	2.78E-11	4.45E-04
Ethane	3.00E-03	2.78E-01	1.22E+00	1.00E-07	1.61E+00	3.04E+00	4.88E-02	2.14E-01	1.00E-07	1.61E+00
Hydrogen sulfide	8.50E-05	7.86E-03	3.44E-02	2.84E-09	4.55E-02	7.59E-02	1.38E-03	6.05E-03	2.84E-09	4.56E-02
Molybdenum	1.10E-06	1.02E-04	4.46E-04	3.67E-11	5.89E-04	3.49E-04	1.79E-05	7.83E-05	3.68E-11	5.90E-04
Phosphorus (Inorganic HAP)	6.40E-07	5.92E-05	2.59E-04	2.14E-11	3.42E-04	6.29E-04	1.04E-05	4.56E-05	2.14E-11	3.43E-04
Vanadium	2.30E-06	2.13E-04	9.32E-04	7.68E-11	1.23E-03	1.37E-03	3.74E-05	1.64E-04	7.70E-11	1.23E-03
Zinc	2.80E-05	2.59E-03	1.13E-02	9.34E-10	1.50E-02	1.30E-02	4.55E-04	1.99E-03	9.37E-10	1.50E-02

*Calculated based on the TABLE 1.4-2. AP 42, Fifth Edition, Volume IChapter 1: External Comb

** All PM (total, Condensable, and filterable) is assumed to be less than 1.0 micrometer in di

Operating hours/year 8760

Emissions Estimation Protocol for Petroleum Refineries, Version 3, RTI International.

Table 4-3. Summary of Emission Factors for Boilers and Process Heaters Firing Various Fuels

			Alkylation Unit							
		Tag	Iso-Stripper Reboiler		flue gas (lb/h)	30,004.10	Tag	Feed Heater		flue gas (lb/h)
		110-H-1001	Heat input (MMBtu/h)	84.19	density (lb/ft3)	0.03	118-H-1801	Heat input (MMBtu/h)	13.75	density (lb/ft3)
Emission Factors for Boilers and Process Heaters Firing. External Combustion, Natural Gas/Refinery Gas (lb/MMBtu)		8,091.77	Emission (lb/h)	Emission (us tpy)	flue gas (ft3/h)	1,013,652.03	16,894.20	Emission (lb/h)	Emission (us tpy)	flue gas (ft3/h)
					T (°F)	785.5				T (°F)
					T(K)	691.76				T(K)
HAP		Conc. (ppmv)			Conc. (lb/ft3)	Conc. (mg/m3)	Conc. (ppmv)			Conc. (lb/ft3)
Antimony	5.20E-07	1.28E-04	4.38E-05	1.92E-04	4.32E-11	6.92E-04	3.23E-04	7.15E-06	3.13E-05	1.74E-11
Arsenic	2.00E-07	7.99E-05	1.68E-05	7.38E-05	1.66E-11	2.66E-04	2.02E-04	2.75E-06	1.20E-05	6.67E-12
Beryllium	1.30E-07	4.32E-04	1.09E-05	4.79E-05	1.08E-11	1.73E-04	1.09E-03	1.79E-06	7.83E-06	4.34E-12
Cadmium	1.10E-06	2.93E-04	9.26E-05	4.06E-04	9.14E-11	1.46E-03	7.40E-04	1.51E-05	6.62E-05	3.67E-11
Chromium (hexavalent)	2.80E-07	1.61E-04	2.36E-05	1.03E-04	2.33E-11	3.73E-04	4.07E-04	3.85E-06	1.69E-05	9.34E-12
Chromium (total)	1.40E-06	8.06E-04	1.18E-04	5.16E-04	1.16E-10	1.86E-03	2.04E-03	1.93E-05	8.43E-05	4.67E-11
Cobalt	8.20E-08	4.17E-05	6.90E-06	3.02E-05	6.81E-12	1.09E-04	1.05E-04	1.13E-06	4.94E-06	2.74E-12
Manganese	3.70E-07	2.02E-04	3.12E-05	1.36E-04	3.07E-11	4.93E-04	5.09E-04	5.09E-06	2.23E-05	1.23E-11
Mercury	2.50E-07	3.73E-05	2.10E-05	9.22E-05	2.08E-11	3.33E-04	9.42E-05	3.44E-06	1.51E-05	8.34E-12
Nickel	2.10E-06	1.07E-03	1.77E-04	7.74E-04	1.74E-10	2.80E-03	2.70E-03	2.89E-05	1.26E-04	7.01E-11
Selenium	8.80E-07	3.34E-04	7.41E-05	3.25E-04	7.31E-11	1.17E-03	8.42E-04	1.21E-05	5.30E-05	2.94E-11
Total Metal HAPs	-		**6.16E-04**	**2.70E-03**	**2.74E-10**	**9.74E-03**	**9.05E-03**	**1.01E-04**	**4.40E-04**	**4.48E-11**
Volatile Organics HAPs		Conc. (ppmv)			Conc. (lb/ft3)	Conc. (mg/m3)	Conc. (ppmv)			Conc. (lb/ft3)
Acetaldehyde	1.20E-05	2.04E-03	2.53E-04	1.11E-03	2.49E-10	3.99E-03	5.15E-03	4.13E-05	1.81E-04	1.00E-10
Acrolein	1.70E-05	2.27E-03	3.58E-04	1.57E-03	3.53E-10	5.66E-03	5.73E-03	5.84E-05	2.56E-04	1.42E-10
Benzene	2.10E-06	2.01E-04	4.42E-05	1.94E-04	4.36E-11	6.99E-04	5.08E-04	7.22E-06	3.16E-05	1.75E-11
Benzo(a)anthracene	2.20E-08	7.21E-07	4.63E-07	2.03E-06	4.57E-13	7.32E-06	1.82E-06	7.56E-08	3.31E-07	1.84E-13
Dichlorobenzene	1.20E-06	6.11E-05	2.53E-05	1.11E-04	2.49E-11	3.99E-04	1.54E-04	4.13E-06	1.81E-05	1.00E-11
Ethylbenzene	1.60E-05	1.13E-03	3.37E-04	1.48E-03	3.32E-10	5.33E-03	2.85E-03	5.50E-05	2.41E-04	1.33E-10
Formaldehyde	7.40E-05	1.84E-02	1.56E-03	6.82E-03	1.54E-09	2.46E-02	4.66E-02	2.54E-04	1.11E-03	6.17E-10
Hexane	1.80E-03	1.56E-01	3.79E-02	1.66E-01	3.74E-08	5.99E-01	3.95E-01	6.19E-03	2.71E-02	1.50E-08
Toluene	3.30E-06	2.68E-04	6.95E-05	3.04E-04	6.85E-11	1.10E-03	6.77E-04	1.13E-05	4.97E-05	2.75E-11
Xylene (total)	2.50E-05	1.76E-03	5.26E-04	2.30E-03	5.19E-10	8.32E-03	4.45E-03	8.59E-05	3.76E-04	2.09E-10
Total VOC HAPs			4.11E-02	1.80E-01	4.05E-08	6.49E-01	4.61E-01	6.71E-03	2.94E-02	1.63E-08
Semivolatile and Nonvolatile Organics (excluding dioxin/furans)		Conc. (ppmv)			Conc. (lb/ft3)	Conc. (mg/m3)	Conc. (ppmv)			Conc. (lb/ft3)
Acenaphthene	2.40E-09	1.16E-07	5.05E-08	2.21E-07	4.98E-14	7.99E-07	2.94E-07	8.25E-09	3.61E-08	2.00E-14
Acenaphthylene	6.50E-09	3.20E-07	1.37E-07	5.99E-07	1.35E-13	2.16E-06	8.07E-07	2.23E-08	9.79E-08	5.42E-14
Anthracene	4.70E-09	1.97E-07	9.89E-08	4.33E-07	9.76E-14	1.56E-06	4.98E-07	1.62E-08	7.08E-08	3.92E-14
Benzo(a)pyrene	5.70E-08	1.69E-06	1.20E-06	5.25E-06	1.18E-12	1.90E-05	4.27E-06	1.96E-07	8.58E-07	4.76E-13
Benzo(b)fluoranthene	2.70E-08	8.01E-07	5.68E-07	2.49E-06	5.61E-13	8.99E-06	2.02E-06	9.28E-08	4.07E-07	2.25E-13

Operating hours/year 8760

Emissions Estimation Protocol for Petroleum Refineries, Version 3, RTI International.

Table 4-3. Summary of Emission Factors for Boilers and Process Heaters Firing Various Fuels

			Alkylation Unit							
		Tag	Iso-Stripper Reboiler		flue gas (lb/h)	30,004.10	Tag	Feed Heater		flue gas (lb/h)
		110-H-1001	Heat input (MMBtu/h)	84.19	density (lb/ft3)	0.03	118-H-1801	Heat input (MMBtu/h)	13.75	density (lb/ft3)
Emission Factors for Boilers and Process Heaters Firing. External Combustion, Natural Gas/Refinery Gas (lb/MMBtu)		8,091.77	Emission (lb/h)	Emission (us tpy)	flue gas (ft3/h)	1,013,652.03	16,894.20	Emission (lb/h)	Emission (us tpy)	flue gas (ft3/h)
					T (°F)	785.5				T (°F)
					T(K)	691.76				T(K)
HAP		Conc. (ppmv)			Conc. (lb/ft3)	Conc. (mg/m3)	Conc. (ppmv)			Conc. (lb/ft3)
Benzo(g,h,i)perylene	1.30E-09	3.52E-08	2.74E-08	1.20E-07	2.70E-14	4.33E-07	8.89E-08	4.47E-09	1.96E-08	1.08E-14
Benzo(k)fluoranthene	1.70E-08	5.04E-07	3.58E-07	1.57E-06	3.53E-13	5.66E-06	1.27E-06	5.84E-08	2.56E-07	1.42E-13
Chrysene	1.60E-09	5.25E-08	3.37E-08	1.48E-07	3.32E-14	5.33E-07	1.32E-07	5.50E-09	2.41E-08	1.33E-14
Dibenz(a,h)anthracene	1.20E-09	3.23E-08	2.53E-08	1.11E-07	2.49E-14	3.99E-07	8.15E-08	4.13E-09	1.81E-08	1.00E-14
7,12-Dimethylbenz(a) anthracene	1.60E-08	4.67E-07	3.37E-07	1.48E-06	3.32E-13	5.33E-06	1.18E-06	5.50E-08	2.41E-07	1.33E-13
Fluoranthene	2.90E-09	1.07E-07	6.10E-08	2.67E-07	6.02E-14	9.65E-07	2.71E-07	9.97E-09	4.37E-08	2.42E-14
Fluorene	2.70E-09	1.22E-07	5.68E-08	2.49E-07	5.61E-14	8.99E-07	3.07E-07	9.28E-09	4.07E-08	2.25E-14
Indeno-(1,2,3cd)pyrene	7.10E-08	1.92E-06	1.49E-06	6.55E-06	1.47E-12	2.36E-05	4.85E-06	2.44E-07	1.07E-06	5.92E-13
3-Methylchloranthrene	1.80E-09	5.02E-08	3.79E-08	1.66E-07	3.74E-14	5.99E-07	1.27E-07	6.19E-09	2.71E-08	1.50E-14
2-Methylnaphthalene	2.40E-08	1.26E-06	5.05E-07	2.21E-06	4.98E-13	7.99E-06	3.19E-06	8.25E-08	3.61E-07	2.00E-13
Naphthalene	6.00E-07	3.50E-05	1.26E-05	5.53E-05	1.25E-11	2.00E-04	8.85E-05	2.06E-06	9.03E-06	5.01E-12
Phenanthrene	1.70E-08	7.14E-07	3.58E-07	1.57E-06	3.53E-13	5.66E-06	1.80E-06	5.84E-08	2.56E-07	1.42E-13
Phenol	4.00E-06	3.18E-04	8.42E-05	3.69E-04	8.31E-11	1.33E-03	8.03E-04	1.38E-05	6.02E-05	3.34E-11
Pyrene	4.90E-09	1.81E-07	1.03E-07	4.52E-07	1.02E-13	1.63E-06	4.58E-07	1.68E-08	7.38E-08	4.09E-14
Sum PAH (without naphthalene)	**4.26E-06**	**3.27E-04**	**8.96E-05**	**3.93E-04**	**8.84E-11**	**1.42E-03**	**8.25E-04**	**1.46E-05**	**6.41E-05**	**3.55E-11**
Total SV-NV Organic HAPs			1.02E-04	4.48E-04	1.01E-10	1.62E-03	9.13E-04	1.67E-05	7.32E-05	4.05E-11
TOTAL ORGANIC HAPS			**4.12E-02**	**1.80E-01**				**6.72E-03**	**2.94E-02**	
Other Compounds of Interest		Conc. (ppmv)			Conc. (lb/ft3)	Conc. (mg/m3)	Conc. (ppmv)			Conc. (lb/ft3)
Barium	4.30E-06	9.37E-04	3.62E-04	1.59E-03	3.57E-10	5.73E-03	2.37E-03	5.91E-05	2.59E-04	1.44E-10
Butane	2.10E-03	1.08E+00	1.77E-01	7.74E-01	1.74E-07	2.80E+00	2.73E+00	2.89E-02	1.26E-01	7.01E-08
Copper	8.30E-07	3.91E-04	6.99E-05	3.06E-04	6.89E-11	1.11E-03	9.87E-04	1.14E-05	5.00E-05	2.77E-11
Ethane	3.00E-03	2.99E+00	2.53E-01	1.11E+00	2.49E-07	3.99E+00	7.54E+00	4.13E-02	1.81E-01	1.00E-07
Hydrogen sulfide	8.50E-05	7.47E-02	7.16E-03	3.13E-02	7.06E-09	1.13E-01	1.89E-01	1.17E-03	5.12E-03	2.84E-09
Molybdenum	1.10E-06	3.43E-04	9.26E-05	4.06E-04	9.14E-11	1.46E-03	8.67E-04	1.51E-05	6.62E-05	3.67E-11
Phosphorus (Inorganic HAP)	6.40E-07	6.19E-04	5.39E-05	2.36E-04	5.32E-11	8.52E-04	1.56E-03	8.80E-06	3.85E-05	2.14E-11
Vanadium	2.30E-06	1.35E-03	1.94E-04	8.48E-04	1.91E-10	3.06E-03	3.41E-03	3.16E-05	1.39E-04	7.68E-11
Zinc	2.80E-05	1.28E-02	2.36E-03	1.03E-02	2.33E-09	3.73E-02	3.24E-02	3.85E-04	1.69E-03	9.34E-10

*Calculated based on the TABLE 1.4-2. AP 42, Fifth Edition, Volume IChapter 1: External Comb

** All PM (total, Condensable, and filterable) is assumed to be less than 1.0 micrometer in di

Operating hours/year 8760

		Heavy Naphtha Hydrotreater							
Emissions Estimation Protocol for Petroleum Refineries, Version 3, RTI International.		12,195.00	Tag	Heater 2		flue gas (lb/h)	14,412.80	Tag	
Table 4-3. Summary of Emission Factors for Boilers and Process Heaters Firing Various Fuels		0.03	105-H-0501	Heat input (MMBtu/h)	16.25	density (lb/ft3)	0.03	105-H-0502	Heat input (MMBtu/h)
Emission Factors for Boilers and Process Heaters Firing. External Combustion, Natural Gas/Refinery Gas (lb/MMBtu)		411,993.24	6,866.55	Emission (lb/h)	Emission (us tpy)	flue gas (ft3/h)	486,918.92	8,115.32	Emission (lb/h)
		787.7				T (°F)	787.7		
		692.98				T(K)	692.98		
HAP		Conc. (mg/m3)	Conc. (ppmv)			Conc. (lb/ft3)	Conc. (mg/m3)	Conc. (ppmv)	
Antimony	5.20E-07	2.78E-04	1.30E-04	8.45E-06	3.70E-05	1.74E-11	2.78E-04	1.30E-04	6.50E-06
Arsenic	2.00E-07	1.07E-04	8.12E-05	3.25E-06	1.42E-05	6.67E-12	1.07E-04	8.12E-05	2.50E-06
Beryllium	1.30E-07	6.96E-05	4.39E-04	2.11E-06	9.25E-06	4.34E-12	6.96E-05	4.39E-04	1.63E-06
Cadmium	1.10E-06	5.89E-04	2.98E-04	1.79E-05	7.83E-05	3.67E-11	5.89E-04	2.98E-04	1.38E-05
Chromium (hexavalent)	2.80E-07	1.50E-04	1.64E-04	4.55E-06	1.99E-05	9.34E-12	1.50E-04	1.64E-04	3.50E-06
Chromium (total)	1.40E-06	7.49E-04	8.19E-04	2.28E-05	9.96E-05	4.67E-11	7.49E-04	8.19E-04	1.75E-05
Cobalt	8.20E-08	4.39E-05	4.23E-05	1.33E-06	5.84E-06	2.74E-12	4.39E-05	4.23E-05	1.03E-06
Manganese	3.70E-07	1.98E-04	2.05E-04	6.01E-06	2.63E-05	1.23E-11	1.98E-04	2.05E-04	4.63E-06
Mercury	2.50E-07	1.34E-04	3.79E-05	4.06E-06	1.78E-05	8.34E-12	1.34E-04	3.79E-05	3.13E-06
Nickel	2.10E-06	1.12E-03	1.09E-03	3.41E-05	1.49E-04	7.01E-11	1.12E-03	1.09E-03	2.63E-05
Selenium	8.80E-07	4.71E-04	3.39E-04	1.43E-05	6.26E-05	2.94E-11	4.71E-04	3.39E-04	1.10E-05
Total Metal HAPs	**-**	**3.91E-03**		**1.19E-04**	**5.20E-04**	**5.29E-11**	**3.91E-03**	**3.64E-03**	**9.14E-05**
Volatile Organics HAPs		Conc. (mg/m3)	Conc. (ppmv)			Conc. (lb/ft3)	Conc. (mg/m3)	Conc. (ppmv)	
Acetaldehyde	1.20E-05	1.61E-03	2.07E-03	4.88E-05	2.14E-04	1.00E-10	1.61E-03	2.07E-03	3.75E-05
Acrolein	1.70E-05	2.27E-03	2.31E-03	6.91E-05	3.02E-04	1.42E-10	2.27E-03	2.31E-03	5.31E-05
Benzene	2.10E-06	2.81E-04	2.04E-04	8.53E-06	3.74E-05	1.75E-11	2.81E-04	2.04E-04	6.56E-06
Benzo(a)anthracene	2.20E-08	2.94E-06	7.33E-07	8.94E-08	3.91E-07	1.84E-13	2.94E-06	7.33E-07	6.88E-08
Dichlorobenzene	1.20E-06	1.61E-04	6.21E-05	4.88E-06	2.14E-05	1.00E-11	1.61E-04	6.21E-05	3.75E-06
Ethylbenzene	1.60E-05	2.14E-03	1.15E-03	6.50E-05	2.85E-04	1.33E-10	2.14E-03	1.15E-03	5.00E-05
Formaldehyde	7.40E-05	9.90E-03	1.87E-02	3.01E-04	1.32E-03	6.17E-10	9.90E-03	1.87E-02	2.31E-04
Hexane	1.80E-03	2.41E-01	1.59E-01	7.31E-03	3.20E-02	1.50E-08	2.41E-01	1.59E-01	5.63E-03
Toluene	3.30E-06	4.41E-04	2.72E-04	1.34E-05	5.87E-05	2.75E-11	4.41E-04	2.72E-04	1.03E-05
Xylene (total)	2.50E-05	3.34E-03	1.79E-03	1.02E-04	4.45E-04	2.09E-10	3.34E-03	1.79E-03	7.81E-05
Total VOC HAPs		2.61E-01	1.85E-01	7.92E-03	3.47E-02	1.63E-08	2.61E-01	1.85E-01	6.10E-03
Semivolatile and Nonvolatile Organics (excluding dioxin/furans)		Conc. (mg/m3)	Conc. (ppmv)			Conc. (lb/ft3)	Conc. (mg/m3)	Conc. (ppmv)	
Acenaphthene	2.40E-09	3.21E-07	1.18E-07	9.75E-09	4.27E-08	2.00E-14	3.21E-07	1.18E-07	7.50E-09
Acenaphthylene	6.50E-09	8.70E-07	3.25E-07	2.64E-08	1.16E-07	5.42E-14	8.69E-07	3.25E-07	2.03E-08
Anthracene	4.70E-09	6.29E-07	2.01E-07	1.91E-08	8.36E-08	3.92E-14	6.29E-07	2.01E-07	1.47E-08
Benzo(a)pyrene	5.70E-08	7.62E-06	1.72E-06	2.32E-07	1.01E-06	4.76E-13	7.62E-06	1.72E-06	1.78E-07
Benzo(b)fluoranthene	2.70E-08	3.61E-06	8.14E-07	1.10E-07	4.80E-07	2.25E-13	3.61E-06	8.14E-07	8.44E-08

Operating hours/year 8760

		Heavy Naphtha Hydrotreater							
Emissions Estimation Protocol for Petroleum Refineries, Version 3, RTI International.		12,195.00	Tag	Heater 2		flue gas (lb/h)	14,412.80	Tag	
Table 4-3. Summary of Emission Factors for Boilers and Process Heaters Firing Various Fuels		0.03	105-H-0501	Heat input (MMBtu/h)	16.25	density (lb/ft3)	0.03	105-H-0502	Heat input (MMBtu/h)
Emission Factors for Boilers and Process Heaters Firing. External Combustion, Natural Gas/Refinery Gas (lb/MMBtu)		411,993.24	6,866.55	Emission (lb/h)	Emission (us tpy)	flue gas (ft3/h)	486,918.92	8,115.32	Emission (lb/h)
		787.7				T (°F)	787.7		
		692.98				T(K)	692.98		
HAP		Conc. (mg/m3)	Conc. (ppmv)			Conc. (lb/ft3)	Conc. (mg/m3)	Conc. (ppmv)	
Benzo(g,h,i)perylene	1.30E-09	1.74E-07	3.58E-08	5.28E-09	2.31E-08	1.08E-14	1.74E-07	3.58E-08	4.06E-09
Benzo(k)fluoranthene	1.70E-08	2.27E-06	5.13E-07	6.91E-08	3.02E-07	1.42E-13	2.27E-06	5.12E-07	5.31E-08
Chrysene	1.60E-09	2.14E-07	5.33E-08	6.50E-09	2.85E-08	1.33E-14	2.14E-07	5.33E-08	5.00E-09
Dibenz(a,h)anthracene	1.20E-09	1.61E-07	3.28E-08	4.88E-09	2.14E-08	1.00E-14	1.61E-07	3.28E-08	3.75E-09
7,12-Dimethylbenz(a) anthracene	1.60E-08	2.14E-06	4.75E-07	6.50E-08	2.85E-07	1.33E-13	2.14E-06	4.75E-07	5.00E-08
Fluoranthene	2.90E-09	3.88E-07	1.09E-07	1.18E-08	5.16E-08	2.42E-14	3.88E-07	1.09E-07	9.06E-09
Fluorene	2.70E-09	3.61E-07	1.24E-07	1.10E-08	4.80E-08	2.25E-14	3.61E-07	1.24E-07	8.44E-09
Indeno-(1,2,3cd)pyrene	7.10E-08	9.50E-06	1.95E-06	2.88E-07	1.26E-06	5.92E-13	9.50E-06	1.95E-06	2.22E-07
3-Methylchloranthrene	1.80E-09	2.41E-07	5.10E-08	7.31E-09	3.20E-08	1.50E-14	2.41E-07	5.10E-08	5.63E-09
2-Methylnaphthalene	2.40E-08	3.21E-06	1.28E-06	9.75E-08	4.27E-07	2.00E-13	3.21E-06	1.28E-06	7.50E-08
Naphthalene	6.00E-07	8.03E-05	3.56E-05	2.44E-06	1.07E-05	5.01E-12	8.03E-05	3.56E-05	1.88E-06
Phenanthrene	1.70E-08	2.27E-06	7.25E-07	6.91E-08	3.02E-07	1.42E-13	2.27E-06	7.25E-07	5.31E-08
Phenol	4.00E-06	5.35E-04	3.23E-04	1.63E-05	7.12E-05	3.34E-11	5.35E-04	3.23E-04	1.25E-05
Pyrene	4.90E-09	6.55E-07	1.84E-07	1.99E-08	8.72E-08	4.09E-14	6.55E-07	1.84E-07	1.53E-08
Sum PAH (without naphthalene)	**4.26E-06**	**5.70E-04**	**3.32E-04**	**1.73E-05**	**7.58E-05**	**3.55E-11**	**5.70E-04**	**3.32E-04**	**1.33E-05**
Total SV-NV Organic HAPs		6.50E-04	3.68E-04	1.97E-05	8.65E-05	4.05E-11	6.50E-04	3.68E-04	1.52E-05
TOTAL ORGANIC HAPS				**7.94E-03**	**3.48E-02**				**6.11E-03**
Other Compounds of Interest		Conc. (mg/m3)	Conc. (ppmv)			Conc. (lb/ft3)	Conc. (mg/m3)	Conc. (ppmv)	
Barium	4.30E-06	2.30E-03	9.53E-04	6.99E-05	3.06E-04	1.44E-10	2.30E-03	9.53E-04	5.38E-05
Butane	2.10E-03	1.12E+00	1.10E+00	3.41E-02	1.49E-01	7.01E-08	1.12E+00	1.10E+00	2.63E-02
Copper	8.30E-07	4.44E-04	3.97E-04	1.35E-05	5.91E-05	2.77E-11	4.44E-04	3.97E-04	1.04E-05
Ethane	3.00E-03	1.61E+00	3.04E+00	4.88E-02	2.14E-01	1.00E-07	1.61E+00	3.04E+00	3.75E-02
Hydrogen sulfide	8.50E-05	4.55E-02	7.59E-02	1.38E-03	6.05E-03	2.84E-09	4.55E-02	7.59E-02	1.06E-03
Molybdenum	1.10E-06	5.89E-04	3.49E-04	1.79E-05	7.83E-05	3.67E-11	5.89E-04	3.49E-04	1.38E-05
Phosphorus (Inorganic HAP)	6.40E-07	3.42E-04	6.29E-04	1.04E-05	4.56E-05	2.14E-11	3.42E-04	6.29E-04	8.00E-06
Vanadium	2.30E-06	1.23E-03	1.37E-03	3.74E-05	1.64E-04	7.68E-11	1.23E-03	1.37E-03	2.88E-05
Zinc	2.80E-05	1.50E-02	1.30E-02	4.55E-04	1.99E-03	9.34E-10	1.50E-02	1.30E-02	3.50E-04

*Calculated based on the TABLE 1.4-2. AP 42, Fifth Edition, Volume IChapter 1: External Comb

** All PM (total, Condensable, and filterable) is assumed to be less than 1.0 micrometer in di

Operating hours/year 8760

Emissions Estimation Protocol for Petroleum Refineries, Version 3, RTI International.

Table 4-3. Summary of Emission Factors for Boilers and Process Heaters Firing Various Fuels

		Kero HT							
			flue gas (lb/h)	11,802.00	Tag	Boiler 1		flue gas (lb/h)	58,549.50
		12.5	density (lb/ft3)	0.03	125-H-2501	Heat input (MMBtu/h)	60	density (lb/ft3)	0.05
Emission Factors for Boilers and Process Heaters Firing. External Combustion, Natural Gas/Refinery Gas (lb/MMBtu)		Emission (us tpy)	flue gas (ft3/h)	373,481.01	6,224.68	Emission (lb/h)	Emission (us tpy)	flue gas (ft3/h)	1,194,887.76
			T (°F)	764.3				T (°F)	294.2
			T(K)	679.98				T(K)	418.82
HAP			Conc. (lb/ft3)	Conc. (mg/m3)	Conc. (ppmv)			Conc. (lb/ft3)	Conc. (mg/m3)
Antimony	5.20E-07	2.85E-05	1.74E-11	2.79E-04	1.28E-04	3.12E-05	1.37E-04	2.61E-11	4.19E-04
Arsenic	2.00E-07	1.10E-05	6.69E-12	1.07E-04	7.99E-05	1.20E-05	5.26E-05	1.00E-11	1.61E-04
Beryllium	1.30E-07	7.12E-06	4.35E-12	6.98E-05	4.32E-04	7.80E-06	3.42E-05	6.53E-12	1.05E-04
Cadmium	1.10E-06	6.02E-05	3.68E-11	5.90E-04	2.93E-04	6.60E-05	2.89E-04	5.52E-11	8.86E-04
Chromium (hexavalent)	2.80E-07	1.53E-05	9.37E-12	1.50E-04	1.61E-04	1.68E-05	7.36E-05	1.41E-11	2.25E-04
Chromium (total)	1.40E-06	7.67E-05	4.69E-11	7.51E-04	8.06E-04	8.40E-05	3.68E-04	7.03E-11	1.13E-03
Cobalt	8.20E-08	4.49E-06	2.74E-12	4.40E-05	4.17E-05	4.92E-06	2.15E-05	4.12E-12	6.60E-05
Manganese	3.70E-07	2.03E-05	1.24E-11	1.99E-04	2.02E-04	2.22E-05	9.72E-05	1.86E-11	2.98E-04
Mercury	2.50E-07	1.37E-05	8.37E-12	1.34E-04	3.73E-05	1.50E-05	6.57E-05	1.26E-11	2.01E-04
Nickel	2.10E-06	1.15E-04	7.03E-11	1.13E-03	1.07E-03	1.26E-04	5.52E-04	1.05E-10	1.69E-03
Selenium	8.80E-07	4.82E-05	2.95E-11	4.72E-04	3.34E-04	5.28E-05	2.31E-04	4.42E-11	7.08E-04
Total Metal HAPs	**-**	**4.00E-04**	**4.07E-11**	**3.92E-03**	**3.59E-03**	**4.39E-04**	**1.92E-03**	**1.95E-10**	**5.89E-03**
Volatile Organics HAPs			Conc. (lb/ft3)	Conc. (mg/m3)	Conc. (ppmv)			Conc. (lb/ft3)	Conc. (mg/m3)
Acetaldehyde	1.20E-05	1.64E-04	1.00E-10	1.61E-03	2.04E-03	1.80E-04	7.88E-04	1.51E-10	2.42E-03
Acrolein	1.70E-05	2.33E-04	1.42E-10	2.28E-03	2.27E-03	2.55E-04	1.12E-03	2.13E-10	3.42E-03
Benzene	2.10E-06	2.87E-05	1.76E-11	2.82E-04	2.01E-04	3.15E-05	1.38E-04	2.64E-11	4.23E-04
Benzo(a)anthracene	2.20E-08	3.01E-07	1.84E-13	2.95E-06	7.21E-07	3.30E-07	1.45E-06	2.76E-13	4.43E-06
Dichlorobenzene	1.20E-06	1.64E-05	1.00E-11	1.61E-04	6.11E-05	1.80E-05	7.88E-05	1.51E-11	2.42E-04
Ethylbenzene	1.60E-05	2.19E-04	1.34E-10	2.15E-03	1.13E-03	2.40E-04	1.05E-03	2.01E-10	3.22E-03
Formaldehyde	7.40E-05	1.01E-03	6.19E-10	9.93E-03	1.84E-02	1.11E-03	4.86E-03	9.29E-10	1.49E-02
Hexane	1.80E-03	2.46E-02	1.51E-08	2.41E-01	1.56E-01	2.70E-02	1.18E-01	2.26E-08	3.62E-01
Toluene	3.30E-06	4.52E-05	2.76E-11	4.43E-04	2.68E-04	4.95E-05	2.17E-04	4.14E-11	6.64E-04
Xylene (total)	2.50E-05	3.42E-04	2.09E-10	3.35E-03	1.76E-03	3.75E-04	1.64E-03	3.14E-10	5.03E-03
Total VOC HAPs		2.67E-02	1.63E-08	2.62E-01	1.83E-01	2.93E-02	1.28E-01	2.45E-08	3.93E-01
Semivolatile and Nonvolatile Organics (excluding dioxin/furans)			Conc. (lb/ft3)	Conc. (mg/m3)	Conc. (ppmv)			Conc. (lb/ft3)	Conc. (mg/m3)
Acenaphthene	2.40E-09	3.29E-08	2.01E-14	3.22E-07	1.16E-07	3.60E-08	1.58E-07	3.01E-14	4.83E-07
Acenaphthylene	6.50E-09	8.90E-08	5.44E-14	8.72E-07	3.20E-07	9.75E-08	4.27E-07	8.16E-14	1.31E-06
Anthracene	4.70E-09	6.43E-08	3.93E-14	6.31E-07	1.97E-07	7.05E-08	3.09E-07	5.90E-14	9.46E-07
Benzo(a)pyrene	5.70E-08	7.80E-07	4.77E-13	7.65E-06	1.69E-06	8.55E-07	3.74E-06	7.16E-13	1.15E-05
Benzo(b)fluoranthene	2.70E-08	3.70E-07	2.26E-13	3.62E-06	8.01E-07	4.05E-07	1.77E-06	3.39E-13	5.43E-06

Operating hours/year 8760

Emissions Estimation Protocol for Petroleum Refineries, Version 3, RTI International.

Table 4-3. Summary of Emission Factors for Boilers and Process Heaters Firing Various Fuels

		Kero HT							
			flue gas (lb/h)	11,802.00	Tag	Boiler 1		flue gas (lb/h)	58,549.50
		12.5	density (lb/ft3)	0.03	125-H-2501	Heat input (MMBtu/h)	60	density (lb/ft3)	0.05
Emission Factors for Boilers and Process Heaters Firing. External Combustion, Natural Gas/Refinery Gas (lb/MMBtu)		Emission (us tpy)	flue gas (ft3/h)	373,481.01	6,224.68	Emission (lb/h)	Emission (us tpy)	flue gas (ft3/h)	1,194,887.76
			T (°F)	764.3				T (°F)	294.2
			T(K)	679.98				T(K)	418.82
HAP			Conc. (lb/ft3)	Conc. (mg/m3)	Conc. (ppmv)			Conc. (lb/ft3)	Conc. (mg/m3)
Benzo(g,h,i)perylene	1.30E-09	1.78E-08	1.09E-14	1.74E-07	3.52E-08	1.95E-08	8.54E-08	1.63E-14	2.62E-07
Benzo(k)fluoranthene	1.70E-08	2.33E-07	1.42E-13	2.28E-06	5.04E-07	2.55E-07	1.12E-06	2.13E-13	3.42E-06
Chrysene	1.60E-09	2.19E-08	1.34E-14	2.15E-07	5.25E-08	2.40E-08	1.05E-07	2.01E-14	3.22E-07
Dibenz(a,h)anthracene	1.20E-09	1.64E-08	1.00E-14	1.61E-07	3.23E-08	1.80E-08	7.88E-08	1.51E-14	2.42E-07
7,12-Dimethylbenz(a) anthracene	1.60E-08	2.19E-07	1.34E-13	2.15E-06	4.67E-07	2.40E-07	1.05E-06	2.01E-13	3.22E-06
Fluoranthene	2.90E-09	3.97E-08	2.43E-14	3.89E-07	1.07E-07	4.35E-08	1.91E-07	3.64E-14	5.84E-07
Fluorene	2.70E-09	3.70E-08	2.26E-14	3.62E-07	1.22E-07	4.05E-08	1.77E-07	3.39E-14	5.43E-07
Indeno-(1,2,3cd)pyrene	7.10E-08	9.72E-07	5.94E-13	9.52E-06	1.92E-06	1.07E-06	4.66E-06	8.91E-13	1.43E-05
3-Methylchloranthrene	1.80E-09	2.46E-08	1.51E-14	2.41E-07	5.02E-08	2.70E-08	1.18E-07	2.26E-14	3.62E-07
2-Methylnaphthalene	2.40E-08	3.29E-07	2.01E-13	3.22E-06	1.26E-06	3.60E-07	1.58E-06	3.01E-13	4.83E-06
Naphthalene	6.00E-07	8.21E-06	5.02E-12	8.05E-05	3.50E-05	9.00E-06	3.94E-05	7.53E-12	1.21E-04
Phenanthrene	1.70E-08	2.33E-07	1.42E-13	2.28E-06	7.14E-07	2.55E-07	1.12E-06	2.13E-13	3.42E-06
Phenol	4.00E-06	5.48E-05	3.35E-11	5.37E-04	3.18E-04	6.00E-05	2.63E-04	5.02E-11	8.05E-04
Pyrene	4.90E-09	6.71E-08	4.10E-14	6.57E-07	1.81E-07	7.35E-08	3.22E-07	6.15E-14	9.86E-07
Sum PAH (without naphthalene)	**4.26E-06**	**5.83E-05**	**3.56E-11**	**5.71E-04**	**3.27E-04**	**6.39E-05**	**2.80E-04**	**5.35E-11**	**8.57E-04**
Total SV-NV Organic HAPs		6.65E-05	4.07E-11	6.52E-04	3.62E-04	7.29E-05	3.19E-04	6.10E-11	9.78E-04
TOTAL ORGANIC HAPS		**2.68E-02**				**2.93E-02**	**1.28E-01**		
Other Compounds of Interest			Conc. (lb/ft3)	Conc. (mg/m3)	Conc. (ppmv)			Conc. (lb/ft3)	Conc. (mg/m3)
Barium	4.30E-06	2.35E-04	1.44E-10	2.31E-03	9.37E-04	2.58E-04	1.13E-03	2.16E-10	3.46E-03
Butane	2.10E-03	1.15E-01	7.03E-08	1.13E+00	1.08E+00	1.26E-01	5.52E-01	1.05E-07	1.69E+00
Copper	8.30E-07	4.54E-05	2.78E-11	4.45E-04	3.91E-04	4.98E-05	2.18E-04	4.17E-11	6.68E-04
Ethane	3.00E-03	1.64E-01	1.00E-07	1.61E+00	2.99E+00	1.80E-01	7.88E-01	1.51E-07	2.42E+00
Hydrogen sulfide	8.50E-05	4.65E-03	2.84E-09	4.56E-02	7.47E-02	5.10E-03	2.23E-02	4.27E-09	6.84E-02
Molybdenum	1.10E-06	6.02E-05	3.68E-11	5.90E-04	3.43E-04	6.60E-05	2.89E-04	5.52E-11	8.86E-04
Phosphorus (Inorganic HAP)	6.40E-07	3.50E-05	2.14E-11	3.43E-04	6.19E-04	3.84E-05	1.68E-04	3.21E-11	5.15E-04
Vanadium	2.30E-06	1.26E-04	7.70E-11	1.23E-03	1.35E-03	1.38E-04	6.04E-04	1.15E-10	1.85E-03
Zinc	2.80E-05	1.53E-03	9.37E-10	1.50E-02	1.28E-02	1.68E-03	7.36E-03	1.41E-09	2.25E-02

*Calculated based on the TABLE 1.4-2. AP 42, Fifth Edition, Volume IChapter 1: External Comb

** All PM (total, Condensable, and filterable) is assumed to be less than 1.0 micrometer in di

Operating hours/year 8760

		Utility Boiler						
Emissions Estimation Protocol for Petroleum Refineries, Version 3, RTI International.		Tag	Boiler 2		flue gas (lb/h)	58,549.50	Tag	Boil
Table 4-3. Summary of Emission Factors for Boilers and Process Heaters Firing Various Fuels		202-PK-0201A	Heat input (MMBtu/h)	60	density (lb/ft3)	0.05	202-PK-0201B	Heat input (MMBtu/h)
Emission Factors for Boilers and Process Heaters Firing. External Combustion, Natural Gas/Refinery Gas (lb/MMBtu)		19,914.80	Emission (lb/h)	Emission (us tpy)	flue gas (ft3/h)	1,194,887.76	19,914.80	Emission (lb/h)
					T (°F)	294.2		
					T(K)	418.82		
HAP		Conc. (ppmv)			Conc. (lb/ft3)	Conc. (mg/m3)	Conc. (ppmv)	
Antimony	5.20E-07	1.18E-04	3.12E-05	1.37E-04	2.61E-11	4.19E-04	1.18E-04	2.60E-06
Arsenic	2.00E-07	7.39E-05	1.20E-05	5.26E-05	1.00E-11	1.61E-04	7.39E-05	1.00E-06
Beryllium	1.30E-07	3.99E-04	7.80E-06	3.42E-05	6.53E-12	1.05E-04	3.99E-04	6.50E-07
Cadmium	1.10E-06	2.71E-04	6.60E-05	2.89E-04	5.52E-11	8.86E-04	2.71E-04	5.50E-06
Chromium (hexavalent)	2.80E-07	1.49E-04	1.68E-05	7.36E-05	1.41E-11	2.25E-04	1.49E-04	1.40E-06
Chromium (total)	1.40E-06	7.45E-04	8.40E-05	3.68E-04	7.03E-11	1.13E-03	7.45E-04	7.00E-06
Cobalt	8.20E-08	3.85E-05	4.92E-06	2.15E-05	4.12E-12	6.60E-05	3.85E-05	4.10E-07
Manganese	3.70E-07	1.86E-04	2.22E-05	9.72E-05	1.86E-11	2.98E-04	1.86E-04	1.85E-06
Mercury	2.50E-07	3.45E-05	1.50E-05	6.57E-05	1.26E-11	2.01E-04	3.45E-05	1.25E-06
Nickel	2.10E-06	9.90E-04	1.26E-04	5.52E-04	1.05E-10	1.69E-03	9.90E-04	1.05E-05
Selenium	8.80E-07	3.08E-04	5.28E-05	2.31E-04	4.42E-11	7.08E-04	3.08E-04	4.40E-06
Total Metal HAPs	**-**	**3.31E-03**	**4.39E-04**	**1.92E-03**	**1.95E-10**	**5.89E-03**	**3.31E-03**	**3.66E-05**
Volatile Organics HAPs		Conc. (ppmv)			Conc. (lb/ft3)	Conc. (mg/m3)	Conc. (ppmv)	
Acetaldehyde	1.20E-05	1.88E-03	1.80E-04	7.88E-04	1.51E-10	2.42E-03	1.88E-03	1.50E-05
Acrolein	1.70E-05	2.10E-03	2.55E-04	1.12E-03	2.13E-10	3.42E-03	2.10E-03	2.13E-05
Benzene	2.10E-06	1.86E-04	3.15E-05	1.38E-04	2.64E-11	4.23E-04	1.86E-04	2.63E-06
Benzo(a)anthracene	2.20E-08	6.66E-07	3.30E-07	1.45E-06	2.76E-13	4.43E-06	6.66E-07	2.75E-08
Dichlorobenzene	1.20E-06	5.65E-05	1.80E-05	7.88E-05	1.51E-11	2.42E-04	5.65E-05	1.50E-06
Ethylbenzene	1.60E-05	1.04E-03	2.40E-04	1.05E-03	2.01E-10	3.22E-03	1.04E-03	2.00E-05
Formaldehyde	7.40E-05	1.70E-02	1.11E-03	4.86E-03	9.29E-10	1.49E-02	1.70E-02	9.25E-05
Hexane	1.80E-03	1.44E-01	2.70E-02	1.18E-01	2.26E-08	3.62E-01	1.44E-01	2.25E-03
Toluene	3.30E-06	2.48E-04	4.95E-05	2.17E-04	4.14E-11	6.64E-04	2.48E-04	4.13E-06
Xylene (total)	2.50E-05	1.63E-03	3.75E-04	1.64E-03	3.14E-10	5.03E-03	1.63E-03	3.13E-05
Total VOC HAPs		1.69E-01	2.93E-02	1.28E-01	2.45E-08	3.93E-01	1.69E-01	2.44E-03
Semivolatile and Nonvolatile Organics (excluding dioxin/furans)		Conc. (ppmv)			Conc. (lb/ft3)	Conc. (mg/m3)	Conc. (ppmv)	
Acenaphthene	2.40E-09	1.08E-07	3.60E-08	1.58E-07	3.01E-14	4.83E-07	1.08E-07	3.00E-09
Acenaphthylene	6.50E-09	2.95E-07	9.75E-08	4.27E-07	8.16E-14	1.31E-06	2.95E-07	8.13E-09
Anthracene	4.70E-09	1.82E-07	7.05E-08	3.09E-07	5.90E-14	9.46E-07	1.82E-07	5.88E-09
Benzo(a)pyrene	5.70E-08	1.56E-06	8.55E-07	3.74E-06	7.16E-13	1.15E-05	1.56E-06	7.13E-08
Benzo(b)fluoranthene	2.70E-08	7.40E-07	4.05E-07	1.77E-06	3.39E-13	5.43E-06	7.40E-07	3.38E-08

Operating hours/year 8760

		Utility Boiler						
Emissions Estimation Protocol for Petroleum Refineries, Version 3, RTI International.		Tag	Boiler 2		flue gas (lb/h)	58,549.50	Tag	Boil
Table 4-3. Summary of Emission Factors for Boilers and Process Heaters Firing Various Fuels		202-PK-0201A	Heat input (MMBtu/h)	60	density (lb/ft3)	0.05	202-PK-0201B	Heat input (MMBtu/h)
Emission Factors for Boilers and Process Heaters Firing. External Combustion, Natural Gas/Refinery Gas (lb/MMBtu)		19,914.80	Emission (lb/h)	Emission (us tpy)	flue gas (ft3/h)	1,194,887.76	19,914.80	Emission (lb/h)
					T (°F)	294.2		
					T(K)	418.82		
HAP		Conc. (ppmv)			Conc. (lb/ft3)	Conc. (mg/m3)	Conc. (ppmv)	
Benzo(g,h,i)perylene	1.30E-09	3.25E-08	1.95E-08	8.54E-08	1.63E-14	2.62E-07	3.25E-08	1.63E-09
Benzo(k)fluoranthene	1.70E-08	4.66E-07	2.55E-07	1.12E-06	2.13E-13	3.42E-06	4.66E-07	2.13E-08
Chrysene	1.60E-09	4.85E-08	2.40E-08	1.05E-07	2.01E-14	3.22E-07	4.85E-08	2.00E-09
Dibenz(a,h)anthracene	1.20E-09	2.98E-08	1.80E-08	7.88E-08	1.51E-14	2.42E-07	2.98E-08	1.50E-09
7,12-Dimethylbenz(a) anthracene	1.60E-08	4.32E-07	2.40E-07	1.05E-06	2.01E-13	3.22E-06	4.32E-07	2.00E-08
Fluoranthene	2.90E-09	9.92E-08	4.35E-08	1.91E-07	3.64E-14	5.84E-07	9.92E-08	3.63E-09
Fluorene	2.70E-09	1.12E-07	4.05E-08	1.77E-07	3.39E-14	5.43E-07	1.12E-07	3.38E-09
Indeno-(1,2,3cd)pyrene	7.10E-08	1.78E-06	1.07E-06	4.66E-06	8.91E-13	1.43E-05	1.78E-06	8.88E-08
3-Methylchloranthrene	1.80E-09	4.64E-08	2.70E-08	1.18E-07	2.26E-14	3.62E-07	4.64E-08	2.25E-09
2-Methylnaphthalene	2.40E-08	1.17E-06	3.60E-07	1.58E-06	3.01E-13	4.83E-06	1.17E-06	3.00E-08
Naphthalene	6.00E-07	3.24E-05	9.00E-06	3.94E-05	7.53E-12	1.21E-04	3.24E-05	7.50E-07
Phenanthrene	1.70E-08	6.60E-07	2.55E-07	1.12E-06	2.13E-13	3.42E-06	6.60E-07	2.13E-08
Phenol	4.00E-06	2.94E-04	6.00E-05	2.63E-04	5.02E-11	8.05E-04	2.94E-04	5.00E-06
Pyrene	4.90E-09	1.68E-07	7.35E-08	3.22E-07	6.15E-14	9.86E-07	1.68E-07	6.13E-09
Sum PAH (without naphthalene)	**4.26E-06**	**3.02E-04**	**6.39E-05**	**2.80E-04**	**5.35E-11**	**8.57E-04**	**3.02E-04**	**5.32E-06**
Total SV-NV Organic HAPs		3.34E-04	7.29E-05	3.19E-04	6.10E-11	9.78E-04	3.34E-04	6.07E-06
TOTAL ORGANIC HAPS			**2.93E-02**	**1.28E-01**				**2.44E-03**
Other Compounds of Interest		Conc. (ppmv)			Conc. (lb/ft3)	Conc. (mg/m3)	Conc. (ppmv)	
Barium	4.30E-06	8.66E-04	2.58E-04	1.13E-03	2.16E-10	3.46E-03	8.66E-04	2.58E-04
Butane	2.10E-03	1.00E+00	1.26E-01	5.52E-01	1.05E-07	1.69E+00	1.00E+00	1.26E-01
Copper	8.30E-07	3.61E-04	4.98E-05	2.18E-04	4.17E-11	6.68E-04	3.61E-04	4.98E-05
Ethane	3.00E-03	2.76E+00	1.80E-01	7.88E-01	1.51E-07	2.42E+00	2.76E+00	1.80E-01
Hydrogen sulfide	8.50E-05	6.90E-02	5.10E-03	2.23E-02	4.27E-09	6.84E-02	6.90E-02	5.10E-03
Molybdenum	1.10E-06	3.17E-04	6.60E-05	2.89E-04	5.52E-11	8.86E-04	3.17E-04	6.60E-05
Phosphorus (Inorganic HAP)	6.40E-07	5.72E-04	3.84E-05	1.68E-04	3.21E-11	5.15E-04	5.72E-04	3.84E-05
Vanadium	2.30E-06	1.25E-03	1.38E-04	6.04E-04	1.15E-10	1.85E-03	1.25E-03	1.38E-04
Zinc	2.80E-05	1.18E-02	1.68E-03	7.36E-03	1.41E-09	2.25E-02	1.18E-02	1.68E-03

*Calculated based on the TABLE 1.4-2. AP 42, Fifth Edition, Volume IChapter 1: External Comb

** All PM (total, Condensable, and filterable) is assumed to be less than 1.0 micrometer in di

Operating hours/year 8760

						FCC Naphtha Hydrotreate		
Emissions Estimation Protocol for Petroleum Refineries, Version 3, RTI International.		er 3	flue gas (lb/h)	58,549.50	Tag			flue gas (lb/h)
Table 4-3. Summary of Emission Factors for Boilers and Process Heaters Firing Various Fuels		5	density (lb/ft3)	0.05	202-PK-0201C	Heat input (MMBtu/h)	17.48	density (lb/ft3)
Emission Factors for Boilers and Process Heaters Firing. External Combustion, Natural Gas/Refinery Gas (lb/MMBtu)		Emission (us tpy)	flue gas (ft3/h)	1,194,887.76	19,914.80	Emission (lb/h)	Emission (us tpy)	flue gas (ft3/h)
			T (°F)	294.2				T (°F)
			T(K)	418.82				T(K)
HAP			Conc. (lb/ft3)	Conc. (mg/m3)	Conc. (ppmv)			Conc. (lb/ft3)
Antimony	5.20E-07	1.14E-05	2.18E-12	3.49E-05	9.85E-06	9.09E-06	3.98E-05	1.74E-11
Arsenic	2.00E-07	4.38E-06	8.37E-13	1.34E-05	6.15E-06	3.50E-06	1.53E-05	6.70E-12
Beryllium	1.30E-07	2.85E-06	5.44E-13	8.72E-06	3.33E-05	2.27E-06	9.95E-06	4.35E-12
Cadmium	1.10E-06	2.41E-05	4.60E-12	7.38E-05	2.26E-05	1.92E-05	8.42E-05	3.68E-11
Chromium (hexavalent)	2.80E-07	6.13E-06	1.17E-12	1.88E-05	1.24E-05	4.89E-06	2.14E-05	9.38E-12
Chromium (total)	1.40E-06	3.07E-05	5.86E-12	9.39E-05	6.21E-05	2.45E-05	1.07E-04	4.69E-11
Cobalt	8.20E-08	1.80E-06	3.43E-13	5.50E-06	3.21E-06	1.43E-06	6.28E-06	2.75E-12
Manganese	3.70E-07	8.10E-06	1.55E-12	2.48E-05	1.55E-05	6.47E-06	2.83E-05	1.24E-11
Mercury	2.50E-07	5.48E-06	1.05E-12	1.68E-05	2.87E-06	4.37E-06	1.91E-05	8.37E-12
Nickel	2.10E-06	4.60E-05	8.79E-12	1.41E-04	8.25E-05	3.67E-05	1.61E-04	7.03E-11
Selenium	8.80E-07	1.93E-05	3.68E-12	5.90E-05	2.57E-05	1.54E-05	6.74E-05	2.95E-11
Total Metal HAPs	**-**	**1.60E-04**	**1.63E-11**	**4.91E-04**	**2.76E-04**	**1.28E-04**	**5.60E-04**	**5.69E-11**
Volatile Organics HAPs			Conc. (lb/ft3)	Conc. (mg/m3)	Conc. (ppmv)			Conc. (lb/ft3)
Acetaldehyde	1.20E-05	6.57E-05	1.26E-11	2.01E-04	1.57E-04	5.24E-05	2.30E-04	1.00E-10
Acrolein	1.70E-05	9.31E-05	1.78E-11	2.85E-04	1.75E-04	7.43E-05	3.25E-04	1.42E-10
Benzene	2.10E-06	1.15E-05	2.20E-12	3.52E-05	1.55E-05	9.18E-06	4.02E-05	1.76E-11
Benzo(a)anthracene	2.20E-08	1.20E-07	2.30E-14	3.69E-07	5.55E-08	9.61E-08	4.21E-07	1.84E-13
Dichlorobenzene	1.20E-06	6.57E-06	1.26E-12	2.01E-05	4.71E-06	5.24E-06	2.30E-05	1.00E-11
Ethylbenzene	1.60E-05	8.76E-05	1.67E-11	2.68E-04	8.69E-05	6.99E-05	3.06E-04	1.34E-10
Formaldehyde	7.40E-05	4.05E-04	7.74E-11	1.24E-03	1.42E-03	3.23E-04	1.42E-03	6.20E-10
Hexane	1.80E-03	9.86E-03	1.88E-09	3.02E-02	1.20E-02	7.87E-03	3.45E-02	1.51E-08
Toluene	3.30E-06	1.81E-05	3.45E-12	5.53E-05	2.06E-05	1.44E-05	6.32E-05	2.76E-11
Xylene (total)	2.50E-05	1.37E-04	2.62E-11	4.19E-04	1.36E-04	1.09E-04	4.79E-04	2.09E-10
Total VOC HAPs		1.07E-02	2.04E-09	3.27E-02	1.41E-02	8.52E-03	3.73E-02	1.63E-08
Semivolatile and Nonvolatile Organics (excluding dioxin/furans)			Conc. (lb/ft3)	Conc. (mg/m3)	Conc. (ppmv)			Conc. (lb/ft3)
Acenaphthene	2.40E-09	1.31E-08	2.51E-15	4.03E-08	8.97E-09	1.05E-08	4.59E-08	2.01E-14
Acenaphthylene	6.50E-09	3.56E-08	6.80E-15	1.09E-07	2.46E-08	2.84E-08	1.24E-07	5.44E-14
Anthracene	4.70E-09	2.57E-08	4.92E-15	7.88E-08	1.52E-08	2.05E-08	9.00E-08	3.93E-14
Benzo(a)pyrene	5.70E-08	3.12E-07	5.96E-14	9.56E-07	1.30E-07	2.49E-07	1.09E-06	4.77E-13
Benzo(b)fluoranthene	2.70E-08	1.48E-07	2.82E-14	4.53E-07	6.17E-08	1.18E-07	5.17E-07	2.26E-13

Operating hours/year 8760

						FCC Naphtha Hydrotreate		
Emissions Estimation Protocol for Petroleum Refineries, Version 3, RTI International.		er 3	flue gas (lb/h)	58,549.50	Tag			flue gas (lb/h)
Table 4-3. Summary of Emission Factors for Boilers and Process Heaters Firing Various Fuels		5	density (lb/ft3)	0.05	202-PK-0201C	Heat input (MMBtu/h)	17.48	density (lb/ft3)
Emission Factors for Boilers and Process Heaters Firing. External Combustion, Natural Gas/Refinery Gas (lb/MMBtu)		Emission (us tpy)	flue gas (ft3/h)	1,194,887.76	19,914.80	Emission (lb/h)	Emission (us tpy)	flue gas (ft3/h)
			T (°F)	294.2				T (°F)
			T(K)	418.82				T(K)
HAP			Conc. (lb/ft3)	Conc. (mg/m3)	Conc. (ppmv)			Conc. (lb/ft3)
Benzo(g,h,i)perylene	1.30E-09	7.12E-09	1.36E-15	2.18E-08	2.71E-09	5.68E-09	2.49E-08	1.09E-14
Benzo(k)fluoranthene	1.70E-08	9.31E-08	1.78E-14	2.85E-07	3.88E-08	7.43E-08	3.25E-07	1.42E-13
Chrysene	1.60E-09	8.76E-09	1.67E-15	2.68E-08	4.04E-09	6.99E-09	3.06E-08	1.34E-14
Dibenz(a,h)anthracene	1.20E-09	6.57E-09	1.26E-15	2.01E-08	2.48E-09	5.24E-09	2.30E-08	1.00E-14
7,12-Dimethylbenz(a) anthracene	1.60E-08	8.76E-08	1.67E-14	2.68E-07	3.60E-08	6.99E-08	3.06E-07	1.34E-13
Fluoranthene	2.90E-09	1.59E-08	3.03E-15	4.86E-08	8.26E-09	1.27E-08	5.55E-08	2.43E-14
Fluorene	2.70E-09	1.48E-08	2.82E-15	4.53E-08	9.36E-09	1.18E-08	5.17E-08	2.26E-14
Indeno-(1,2,3cd)pyrene	7.10E-08	3.89E-07	7.43E-14	1.19E-06	1.48E-07	3.10E-07	1.36E-06	5.94E-13
3-Methylchloranthrene	1.80E-09	9.86E-09	1.88E-15	3.02E-08	3.87E-09	7.87E-09	3.45E-08	1.51E-14
2-Methylnaphthalene	2.40E-08	1.31E-07	2.51E-14	4.03E-07	9.73E-08	1.05E-07	4.59E-07	2.01E-13
Naphthalene	6.00E-07	3.29E-06	6.28E-13	1.01E-05	2.70E-06	2.62E-06	1.15E-05	5.02E-12
Phenanthrene	1.70E-08	9.31E-08	1.78E-14	2.85E-07	5.50E-08	7.43E-08	3.25E-07	1.42E-13
Phenol	4.00E-06	2.19E-05	4.18E-12	6.71E-05	2.45E-05	1.75E-05	7.66E-05	3.35E-11
Pyrene	4.90E-09	2.68E-08	5.13E-15	8.22E-08	1.40E-08	2.14E-08	9.38E-08	4.10E-14
Sum PAH (without naphthalene)	**4.26E-06**	**2.33E-05**	**4.46E-12**	**7.14E-05**	**2.52E-05**	**1.86E-05**	**8.15E-05**	**3.57E-11**
Total SV-NV Organic HAPs		2.66E-05	5.08E-12	8.15E-05	2.79E-05	2.12E-05	9.30E-05	4.07E-11
TOTAL ORGANIC HAPS		**1.07E-02**				**8.55E-03**	**3.74E-02**	
Other Compounds of Interest			Conc. (lb/ft3)	Conc. (mg/m3)	Conc. (ppmv)			Conc. (lb/ft3)
Barium	4.30E-06	1.13E-03	2.16E-10	3.46E-03	8.66E-04	7.52E-05	3.29E-04	1.44E-10
Butane	2.10E-03	5.52E-01	1.05E-07	1.69E+00	1.00E+00	3.67E-02	1.61E-01	7.03E-08
Copper	8.30E-07	2.18E-04	4.17E-11	6.68E-04	3.61E-04	1.45E-05	6.35E-05	2.78E-11
Ethane	3.00E-03	7.88E-01	1.51E-07	2.42E+00	2.76E+00	5.24E-02	2.30E-01	1.00E-07
Hydrogen sulfide	8.50E-05	2.23E-02	4.27E-09	6.84E-02	6.90E-02	1.49E-03	6.51E-03	2.85E-09
Molybdenum	1.10E-06	2.89E-04	5.52E-11	8.86E-04	3.17E-04	1.92E-05	8.42E-05	3.68E-11
Phosphorus (Inorganic HAP)	6.40E-07	1.68E-04	3.21E-11	5.15E-04	5.72E-04	1.12E-05	4.90E-05	2.14E-11
Vanadium	2.30E-06	6.04E-04	1.15E-10	1.85E-03	1.25E-03	4.02E-05	1.76E-04	7.70E-11
Zinc	2.80E-05	7.36E-03	1.41E-09	2.25E-02	1.18E-02	4.89E-04	2.14E-03	9.38E-10

*Calculated based on the TABLE 1.4-2. AP 42, Fifth Edition, Volume IChapter 1: External Comb

** All PM (total, Condensable, and filterable) is assumed to be less than 1.0 micrometer in di

Operating hours/year 8760

				TOTALS		
Emissions Estimation Protocol for Petroleum Refineries, Version 3, RTI International.		15,503.00	Tag			
Table 4-3. Summary of Emission Factors for Boilers and Process Heaters Firing Various Fuels		0.03	114-H-1401			
Emission Factors for Boilers and Process Heaters Firing. External Combustion, Natural Gas/Refinery Gas (lb/MMBtu)		521,986.53	8,699.78			
		784.3				
		691.09				
HAP		Conc. (mg/m3)	Conc. (ppmv)	Boilers (US tpy)	Heaters (US tpy)	Total US tpy
Antimony	5.20E-07	2.79E-04	1.30E-04	**2.8E-04**	**1.4E-03**	**1.7E-03**
Arsenic	2.00E-07	1.07E-04	8.13E-05	**1.1E-04**	**5.4E-04**	**6.5E-04**
Beryllium	1.30E-07	6.98E-05	4.39E-04	**7.1E-05**	**3.5E-04**	**4.2E-04**
Cadmium	1.10E-06	5.91E-04	2.98E-04	**6.0E-04**	**3.0E-03**	**3.6E-03**
Chromium (hexavalent)	2.80E-07	1.50E-04	1.64E-04	**1.5E-04**	**7.6E-04**	**9.1E-04**
Chromium (total)	1.40E-06	7.52E-04	8.20E-04	**7.7E-04**	**3.8E-03**	**4.6E-03**
Cobalt	8.20E-08	4.40E-05	4.24E-05	**4.5E-05**	**2.2E-04**	**2.7E-04**
Manganese	3.70E-07	1.99E-04	2.05E-04	**2.0E-04**	**1.0E-03**	**1.2E-03**
Mercury	2.50E-07	1.34E-04	3.79E-05	**1.4E-04**	**6.8E-04**	**8.2E-04**
Nickel	2.10E-06	1.13E-03	1.09E-03	**1.1E-03**	**5.7E-03**	**6.9E-03**
Selenium	8.80E-07	4.72E-04	3.39E-04	**4.8E-04**	**2.4E-03**	**2.9E-03**
Total Metal HAPs	**-**	**3.93E-03**	**3.65E-03**	**4.0E-03**	**2.0E-02**	**2.39E-02**
Volatile Organics HAPs		Conc. (mg/m3)	Conc. (ppmv)	Boilers (US tpy)	Heaters (US tpy)	Total US tpy
Acetaldehyde	1.20E-05	1.61E-03	2.07E-03	**1.6E-03**	**8.2E-03**	**9.8E-03**
Acrolein	1.70E-05	2.28E-03	2.31E-03	**2.3E-03**	**1.2E-02**	**1.4E-02**
Benzene	2.10E-06	2.82E-04	2.05E-04	**2.9E-04**	**1.4E-03**	**1.7E-03**
Benzo(a)anthracene	2.20E-08	2.95E-06	7.33E-07	**3.0E-06**	**1.5E-05**	**1.8E-05**
Dichlorobenzene	1.20E-06	1.61E-04	6.21E-05	**1.6E-04**	**8.2E-04**	**9.8E-04**
Ethylbenzene	1.60E-05	2.15E-03	1.15E-03	**2.2E-03**	**1.1E-02**	**1.3E-02**
Formaldehyde	7.40E-05	9.93E-03	1.88E-02	**1.0E-02**	**5.0E-02**	**6.0E-02**
Hexane	1.80E-03	2.42E-01	1.59E-01	**2.5E-01**	**1.2E+00**	**1.5E+00**
Toluene	3.30E-06	4.43E-04	2.73E-04	**4.5E-04**	**2.2E-03**	**2.7E-03**
Xylene (total)	2.50E-05	3.36E-03	1.79E-03	**3.4E-03**	**1.7E-02**	**2.0E-02**
Total VOC HAPs		2.62E-01	1.86E-01	**2.7E-01**	**1.3E+00**	**1.59E+00**
Semivolatile and Nonvolatile Organics (excluding dioxin/furans)		Conc. (mg/m3)	Conc. (ppmv)	Boilers (US tpy)	Heaters (US tpy)	Total US tpy
Acenaphthene	2.40E-09	3.22E-07	1.18E-07	**3.3E-07**	**1.6E-06**	**2.0E-06**
Acenaphthylene	6.50E-09	8.72E-07	3.25E-07	**8.9E-07**	**4.4E-06**	**5.3E-06**
Anthracene	4.70E-09	6.31E-07	2.01E-07	**6.4E-07**	**3.2E-06**	**3.8E-06**
Benzo(a)pyrene	5.70E-08	7.65E-06	1.72E-06	**7.8E-06**	**3.9E-05**	**4.7E-05**
Benzo(b)fluoranthene	2.70E-08	3.62E-06	8.15E-07	**3.7E-06**	**1.8E-05**	**2.2E-05**

Operating hours/year 8760

				TOTALS		
Emissions Estimation Protocol for Petroleum Refineries, Version 3, RTI International.		15,503.00	Tag			
Table 4-3. Summary of Emission Factors for Boilers and Process Heaters Firing Various Fuels		0.03	114-H-1401			
Emission Factors for Boilers and Process Heaters Firing. External Combustion, Natural Gas/Refinery Gas (lb/MMBtu)		521,986.53	8,699.78			
		784.3				
		691.09				
HAP		Conc. (mg/m3)	Conc. (ppmv)	Boilers (US tpy)	Heaters (US tpy)	Total US tpy
Benzo(g,h,i)perylene	1.30E-09	1.74E-07	3.58E-08	**1.8E-07**	**8.8E-07**	**1.1E-06**
Benzo(k)fluoranthene	1.70E-08	2.28E-06	5.13E-07	**2.3E-06**	**1.2E-05**	**1.4E-05**
Chrysene	1.60E-09	2.15E-07	5.33E-08	**2.2E-07**	**1.1E-06**	**1.3E-06**
Dibenz(a,h)anthracene	1.20E-09	1.61E-07	3.28E-08	**1.6E-07**	**8.2E-07**	**9.8E-07**
7,12-Dimethylbenz(a) anthracene	1.60E-08	2.15E-06	4.75E-07	**2.2E-06**	**1.1E-05**	**1.3E-05**
Fluoranthene	2.90E-09	3.89E-07	1.09E-07	**4.0E-07**	**2.0E-06**	**2.4E-06**
Fluorene	2.70E-09	3.62E-07	1.24E-07	**3.7E-07**	**1.8E-06**	**2.2E-06**
Indeno-(1,2,3cd)pyrene	7.10E-08	9.53E-06	1.96E-06	**9.7E-06**	**4.8E-05**	**5.8E-05**
3-Methylchloranthrene	1.80E-09	2.42E-07	5.11E-08	**2.5E-07**	**1.2E-06**	**1.5E-06**
2-Methylnaphthalene	2.40E-08	3.22E-06	1.28E-06	**3.3E-06**	**1.6E-05**	**2.0E-05**
Naphthalene	6.00E-07	8.05E-05	3.56E-05	**8.2E-05**	**4.1E-04**	**4.9E-04**
Phenanthrene	1.70E-08	2.28E-06	7.26E-07	**2.3E-06**	**1.2E-05**	**1.4E-05**
Phenol	4.00E-06	5.37E-04	3.23E-04	**5.5E-04**	**2.7E-03**	**3.3E-03**
Pyrene	4.90E-09	6.58E-07	1.84E-07	**6.7E-07**	**3.3E-06**	**4.0E-06**
Sum PAH (without naphthalene)	**4.26E-06**	**5.72E-04**	**3.32E-04**	**Boilers (US tpy)**	**Heaters (US tpy)**	**Total US tpy**
Total SV-NV Organic HAPs		6.52E-04	3.68E-04	**6.7E-04**	**3.3E-03**	**4.0E-03**
TOTAL ORGANIC HAPS				**2.68E-01**	**1.33E+00**	**1.596E+00**
Other Compounds of Interest		Conc. (mg/m3)	Conc. (ppmv)	Boilers (US tpy)	Heaters (US tpy)	Total US tpy
Barium	4.30E-06	2.31E-03	9.53E-04	**3.4E-03**	**1.2E-02**	**1.5E-02**
Butane	2.10E-03	1.13E+00	1.10E+00	**1.7E+00**	**5.7E+00**	**7.4E+00**
Copper	8.30E-07	4.46E-04	3.98E-04	**6.5E-04**	**2.3E-03**	**2.9E-03**
Ethane	3.00E-03	1.61E+00	3.04E+00	**2.4E+00**	**8.2E+00**	**1.1E+01**
Hydrogen sulfide	8.50E-05	4.56E-02	7.59E-02	**6.7E-02**	**2.3E-01**	**3.0E-01**
Molybdenum	1.10E-06	5.91E-04	3.49E-04	**8.7E-04**	**3.0E-03**	**3.9E-03**
Phosphorus (Inorganic HAP)	6.40E-07	3.44E-04	6.29E-04	**5.0E-04**	**1.7E-03**	**2.2E-03**
Vanadium	2.30E-06	1.23E-03	1.37E-03	**1.8E-03**	**6.3E-03**	**8.1E-03**
Zinc	2.80E-05	1.50E-02	1.30E-02	**2.2E-02**	**7.6E-02**	**9.8E-02**

*Calculated based on the TABLE 1.4-2. AP 42, Fifth Edition, Volume IChapter 1: External Comb

** All PM (total, Condensable, and filterable) is assumed to be less than 1.0 micrometer in di

Operating hours/year	8,760		
Maximum Operating Coke Burn-off	8,614	lb/h	Based on FCCU Licensor Data
Unit Fresh Feed rate (bbl/d)	14376	bbl/d	
	14.376	Mbbl/d	
Nickel E-cat (mg/kg)	1,200	PPM (mg/kg)	
C_{Nickel} (in the fines) (kg/kg)	96	PPM (mg/kg)	

	Uncontrolled			Controlled			
Criteria Pollutants	Emission Factors (lb/Mbbl Fresh Feed)	Emissions (lb/h) Uncontrolled	Emission (STPY) Uncontrolled	Contol Device	Control %	Emissions (lb/h) Controlled	Emission (STPY) Controlled
CO*	0	0	0	BCP	100%	0	0
Lead (Ratio to Nickel Concentration)	0.08	4.63E-04	2.03E-03	BCP	99%	4.63E-06	2.03E-05
PM10 Primary	-	11.448	50.1	Wet Scrubber or Tri-Mer	98.0%	0.229	1.003
PM condensable	-	3.876	17.0	Wet Scrubber or Tri-Mer	98.0%	0.078	0.340
PM2.5 filterable	-	6.55	28.7	Wet Scrubber or Tri-Mer	98.0%	0.131	0.573
PM2.5 Primary	-	10.42	45.7	Wet Scrubber or Tri-Mer	98.0%	0.208	0.913
PM10 filterable	-	7.572	33.2	Wet Scrubber or Tri-Mer	98.0%	0.151	0.663
NOx	71	42.53	186.3	COP-NP or Tri-Mer	98%	0.851	3.73
SO_2	***	151.80	664.9	Wet Scrubber or Dry Sorbent	99%	1.52	6.65
VOC**	220	131.78	577.2	Flue Gas Recirculation	99%	1.32	5.77
Total HAP	-	4.85	5.39	BCP		2.70E-01	0.87

* Based on FCCU regenerator design for complete carbon burn operation
** Based on FCCU flue gas capture and recirculation design for complete combustion
*** Based on FCCU Licensor Data

BCP - Best Combustion Practices
COP-NP - Non-Platinum CO combustion promoter

CALCULATIONS

METAL HAP

E_{Nickel} 0.025 $\frac{\text{ton Enickel}}{\text{year}}$

Example: $E_{Antimony}$ $\frac{0.025 \text{ Ton Enickel}}{\text{year}} \times \frac{0.065 \text{ EAntimony}}{\text{Enickel}} = 0.002 \frac{\text{ton Eantimony}}{\text{year}}$

		Uncontrolled		Controlled			
HAP	Emission Ratio	Emission (lb/h)	STPY	Control Device Yes/No?	Control %	Emission (STPY),	lb/h
E_{nickel}	1	5.79E-03	2.54E-02	Yes	99%	2.54E-04	5.79E-05
$E_{antimony}$	0.065	3.76E-04	1.65E-03	Yes	99%	1.65E-05	3.76E-06
$E_{arsenic}$	0.01	5.79E-05	2.54E-04	Yes	99%	2.54E-06	5.79E-07
$E_{beryllium}$	0.003	1.74E-05	7.61E-05	Yes	99%	7.61E-07	1.74E-07
$E_{cadmium}$	0.013	7.53E-05	3.30E-04	Yes	99%	3.30E-06	7.53E-07
$E_{chromium}$	0.25	1.45E-03	6.34E-03	Yes	99%	6.34E-05	1.45E-05
E_{cobalt}	0.052	3.01E-04	1.32E-03	Yes	99%	1.32E-05	3.01E-06
$E_{manganese}$	0.13	7.53E-04	3.30E-03	Yes	99%	3.30E-05	7.53E-06
$E_{selenium}$	0.025	1.45E-04	6.34E-04	Yes	99%	6.34E-06	1.45E-06
$E_{vanadium}$ ***	1.32	7.64E-03	3.35E-02	Yes	99%	3.35E-04	7.64E-05
E_{zinc} ***	0.74	4.28E-03	1.88E-02	Yes	99%	1.88E-04	4.28E-05
		2.09E-02	9.15E-02		**Total Metal HAP**	9.15E-04	2.09E-04

Assumptions

Rate of circulation of catalyst is equal to the coke burnoff rate

Calculations

Maximum Operating Coke Burn-off	8,614	lb/h
Nickel E-cat (mg/kg)	1,200	PPM (mg/kg)

PM Calculation

PM Filterable 0.90 $\frac{\text{lb}}{\text{1000 lb Coke}}$

$\frac{0.9 \text{ lb}}{\text{1000 lb-Coke BO}} \times \frac{8614 \text{ lb Coke}}{\text{h}} \times \frac{8760 \text{ h}}{\text{year}} = 33.96 \frac{\text{STPY } PM_{FIL}}{\text{Year}}$

PM Condensable 0.45 $\frac{\text{lb}}{\text{1000 lb Coke}}$

$\frac{0.45 \text{ lb}}{\text{1000 lb-Coke BO}} \times \frac{\text{lb Coke}}{\text{h}} \times \frac{8760 \text{ h}}{\text{year}} = 16.98 \frac{\text{ton } PM_{FIL}}{\text{Year}}$

PM Primary = PM Filterable + PM Condensable = 50.93 $\frac{\text{ton PM Primary}}{\text{year}}$

PM Sulfate = PM_{FIL} - $PM_{NONSULF}$

$PM_{NONSULF}$ 0.70 $\frac{\text{lb}}{\text{1000 lb Coke}}$

$\frac{0.7 \text{ lb}}{\text{1000 lb-Coke BO}} \times \frac{8614 \text{ lb Coke}}{\text{h}} \times \frac{8760 \text{ h}}{\text{year}} = 26.41 \frac{\text{ton } PM_{NONSULF}}{\text{Year}}$

PM Sulfate = PM Filterable - PM Non Sulfate

PM Sulfate					=	7.5	ton PM Sulfate / year

PM10-Filterable

PM10-Fil Fraction	0.97						
	0.97	26.41 ST PM nonsulf / year	+	7.5 ST PM SUL / year	=	33.16	ton PM10 Fil / year

PM2.5-Filterable

PM10-Fil Fraction	0.80						
	0.80	26.41 ST PM nonsulf / year	+	7.5 ST PM SUL / year	=	28.67	ton PM10 Fil / year

PM2.5PRI

PM2.5-Pri = P<2.5FIL + PM Condensable					=	45.65	ton PM2.5 PRI / year

Calculation of C_{Ni}

C_{Ni}	1,200	mg / kg					
Fraction PM FIL <2.5	0.80						
	26.41	ton PMNONSULF / Year					
			0.8	1200 mg / kg	=	960	mg / kg
		26.41 ton nonsulfate	960 mg / kg	kg / 1 E06 mg	=	0.025	ton Enickel / year

Organic HAP Emissions

Maximum Operating Coke Burn-off	8,614	**lb Coke/h**				
	8.614	1000 lb Coke / h				

Example

Acetaldehyde	8614 lb Coke / h	0.0013 lb / 1000 lb Coke	=	0.0112	lb / h

PAH

	Uncontrolled			Controlled			
	EF (lb/1000 lb-Coke)	**Emission (lb/h)**	**STPY**	**Control**	**Control Efficiency**	**STPY**	**lb/h**
Acetaldehyde	0.0013	1.12E-02	4.90E-02			4.90E-02	1.12E-02
Acetone	1.60E-04	1.38E-03	6.04E-03			6.04E-03	1.38E-03
Acrolein	6.60E-05	5.69E-04	2.49E-03			2.49E-03	5.69E-04
Benzene	1.10E-03	9.48E-03	4.15E-02			4.15E-02	9.48E-03
Bromomethane	1.40E-04	1.21E-03	5.28E-03			5.28E-03	1.21E-03
1,3-Butadiene	2.00E-06	1.72E-05	7.55E-05			7.55E-05	1.72E-05
Ethylbenzene	1.60E-05	1.38E-04	6.04E-04			6.04E-04	1.38E-04
Formaldehyde	0.016	1.38E-01	6.04E-01			6.04E-01	1.38E-01
Methylene chloride	4.40E-04	3.79E-03	1.66E-02			1.66E-02	3.79E-03
Phenol	5.70E-04	4.91E-03	2.15E-02			2.15E-02	4.91E-03
Toluene	2.10E-04	1.81E-03	7.92E-03			7.92E-03	1.81E-03
Trichlorofluoromethane	1.60E-04	1.38E-03	6.04E-03			6.04E-03	1.38E-03
Xylene	2.10E-04	1.81E-03	7.92E-03			7.92E-03	1.81E-03
Acenaphthene	2.20E-07	1.90E-06	8.30E-06			8.30E-06	1.90E-06
Acenaphthylene	7.80E-06	6.72E-05	2.94E-04			2.94E-04	6.72E-05
Anthracene	6.70E-06	5.77E-05	2.53E-04			2.53E-04	5.77E-05
Benzo(a)anthracene	3.80E-08	3.27E-07	1.43E-06			1.43E-06	3.27E-07
Benzo(a)pyrene	7.10E-07	6.12E-06	2.68E-05			2.68E-05	6.12E-06
Benzo(b)fluoranthene	2.40E-07	2.07E-06	9.06E-06			9.06E-06	2.07E-06
Benzo(e)pyrene	3.30E-08	2.84E-07	1.25E-06			1.25E-06	2.84E-07
Benzo(g,h,i)perylene	3.10E-07	2.67E-06	1.17E-05			1.17E-05	2.67E-06
Benzo(k)fluoranthene	1.80E-07	1.55E-06	6.79E-06			6.79E-06	1.55E-06
Chrysene	2.30E-07	1.98E-06	8.68E-06			8.68E-06	1.98E-06
Dibenz(a,h)anthracene	2.80E-07	2.41E-06	1.06E-05			1.06E-05	2.41E-06
Fluoranthene	6.10E-06	5.25E-05	2.30E-04			2.30E-04	5.25E-05
Fluorene	2.40E-06	2.07E-05	9.06E-05			9.06E-05	2.07E-05

Indeno(1,2,3-cd)pyrene	3.00E-07	2.58E-06	1.13E-05			1.13E-05	2.58E-06
2-Methylnaphthalene	1.80E-06	1.55E-05	6.79E-05			6.79E-05	1.55E-05
Naphthalene	7.00E-05	6.03E-04	2.64E-03			2.64E-03	6.03E-04
Phenanthrene	1.60E-05	1.38E-04	6.04E-04			6.04E-04	1.38E-04
Pyrene	2.20E-07	1.90E-06	8.30E-06			8.30E-06	1.90E-06
PAH (without Naphtalene)		3.06E-04	1.34E-03			1.34E-03	3.06E-04
Pentachlorodibenzofurans	3.20E-11	2.76E-10	1.21E-09			1.21E-09	2.76E-10
Hexachlorodibenzofuran	6.30E-11	5.43E-10	2.38E-09			2.38E-09	5.43E-10
Heptachlorodibenzo-p-dioxin	5.60E-11	4.82E-10	2.11E-09			2.11E-09	4.82E-10
Carbon disulfide	3.70E-05	3.19E-04	1.40E-03			1.40E-03	3.19E-04
Hydrogen chloride	0.11	9.48E-01	4.15E+00	Dry Sorbent	98%	8.30E-02	1.90E-02
Hydrogen cyanide****	0.43	3.70E+00	3.70E-01	BCP	98%	7.41E-03	7.41E-02
Mercury	6.00E-06	5.17E-05	2.26E-04		98%	4.53E-06	1.03E-06
		4.83	5.30		**Total Organic HAP**	**8.65E-01**	**2.70E-01**
Ammonia	0.57	4.91E+00	2.15E+01			2.15E+01	4.91E+00

REFERENCES

All calculations were based on the Table 5-4 of the Emissions Estimation Protocol for Petroleum Refineries, Version 3, RTI International (unless noted otherwise)
Metal HAPs were calculated using the Equation 5-1 and Table 5-3 of the RTI Emissions Estimation Protocol.
* Calculated based on the TABLE 5,1-1. AP 42, Fifth Edition, Volume IChapter 1: External Combustion Sources.
** Overall, less than 1% weight of total hydrocarbon emissions is methane.
Neg: negligible.
*** Vanadium and zinc are not HAPs, but are included here as other pollutants of interest.
****: HCN emissions considered to be emitted only in startup and shutdownoperations, which means a factor of 200 hours/year

Reformer 2 Capacity (Mbbl/d)	3.96	
Reformer 1 Capacity (Mbbl/d)	8.76	
Operating hours/year*	672	Four weeks of catalyst regeneration per reactor per year

		Reformer 2		Reformer 1		Notes
	Emissions Factor (lb/Mbbl fresh feed)	Emission (lb/h)	Emission (STPY)	Emission (lb/h)	Emission (STPY)	
Dioxins/PCBs						
Dioxin toxic equivalents (TEQ)b	5.70E-09	9.41E-10	3.16E-10	2.08E-09	6.99E-10	
Total polychlorinated biphenyls (PCB)	2.60E-06	4.29E-07	1.44E-07	9.49E-07	3.19E-07	
Semi-volatile and Non-volatile Organic HAP						Except dioxins, furans, and PCB
Naphthalene	3.50E-05	5.78E-06	1.94E-06	1.28E-05	4.29E-06	Not in the Section 112 list of HAP
2-Methylnaphthalene	1.30E-06	2.15E-07	7.21E-08	4.75E-07	1.59E-07	Not in the Section 112 list of HAP
Acenaphthylene	3.00E-08	4.95E-09	1.66E-09	1.10E-08	3.68E-09	Not in the Section 112 list of HAP
Acenaphthene	4.30E-08	7.10E-09	2.38E-09	1.57E-08	5.27E-09	Not in the Section 112 list of HAP
Fluorene	2.00E-07	3.30E-08	1.11E-08	7.30E-08	2.45E-08	Not in the Section 112 list of HAP
Phenanthrene	6.10E-07	1.01E-07	3.38E-08	2.23E-07	7.48E-08	Not in the Section 112 list of HAP
Anthracene	9.10E-08	1.50E-08	5.05E-09	3.32E-08	1.12E-08	Not in the Section 112 list of HAP
Fluoranthene	1.00E-07	1.65E-08	5.54E-09	3.65E-08	1.23E-08	Not in the Section 112 list of HAP
Pyrene	1.50E-08	2.48E-09	8.32E-10	5.48E-09	1.84E-09	Not in the Section 112 list of HAP
Benzo(a)anthracene	9.00E-10	1.49E-10	4.99E-11	3.29E-10	1.10E-10	Not in the Section 112 list of HAP
Benzo(b)fluoranthene	1.50E-09	2.48E-10	8.32E-11	5.48E-10	1.84E-10	Not in the Section 112 list of HAP
Benzo(k)fluoranthene	7.50E-10	1.24E-10	4.16E-11	2.74E-10	9.20E-11	Not in the Section 112 list of HAP
Benzo(e)pyrene	2.90E-09	4.79E-10	1.61E-10	1.06E-09	3.56E-10	Not in the Section 112 list of HAP
Benzo(g,h,i)perylene	4.00E-09	6.60E-10	2.22E-10	1.46E-09	4.91E-10	Not in the Section 112 list of HAP
Chrysene	2.90E-09	4.79E-10	1.61E-10	1.06E-09	3.56E-10	Not in the Section 112 list of HAP
Dibenzo(a,h)anthracene	7.80E-10	1.29E-10	4.32E-11	2.85E-10	9.57E-11	Not in the Section 112 list of HAP
Indeno(1,2,3-c,d)pyrene	1.70E-09	2.81E-10	9.42E-11	6.21E-10	2.08E-10	Not in the Section 112 list of HAP
Total SV-NV Organic HAPs			**2.07E-06**		**4.59E-06**	
PAH without naphtalene		3.97E-07		8.78E-07		
HAP						
Benzene	0.004	6.60E-04	2.22E-04	1.46E-03	4.91E-04	
Toluene	0.0096	1.58E-03	5.32E-04	3.50E-03	1.18E-03	
Xylene	0.007	1.16E-03	3.88E-04	2.56E-03	8.58E-04	
Total SV-NV Organic HAPs			**1.14E-03**		**2.53E-03**	
THC (Total Hydrocarbons)*	0.24	3.96E-02	**1.33E-02**	8.76E-02	**2.94E-02**	
Other Inorganic HAPs						
Hydrogen Chloride	4.2	0.69	2.33E-01	1.53	0.52	Controlled by Best Operation Practices
Chlorine	0.23	0.04	1.28E-02	0.08	0.03	Controlled by Best Operation Practices
			0.25		**0.54**	
Reference 1:		**Total HAPs**	**2.47E-01**		**5.46E-01**	

Calculations based on the Table 5-6 of the Emissions Estimation Protocol for Petroleum Refineries, Version 3, RTI International.

Reference 2:

*Total hydrocarbons may be used as a surrogate for VOC. Total hydrocarbons are presented on an as propane basis.

SRU UNIT: LO-CAT ® (licensed by MERICHEM)			**LTPD**	**10.14**
Capacity (MMSCFD)	9.4			
Operating hours/year	8,760			
Number of Vents:	2			
to be directed to a Thermal Oxidizer				
Molar Flow combined	597.6	lbmol/h		
STD Vapor Volumetric Flow				
Combined	5.442	MMSCFD	para ppmv es este	
Component	Combined Mole%	Molar Flow (lbmol/h)		
H2	0.1722	1.0292		
C1	0.4742	2.8335		
Ethylene	0.3566	2.1310		
C2	0.4245	2.5370		
C3	0.1750	1.0456		
iC4	0.0295	0.1765		
nC4	0.0843	0.5040		
H2S	1.17E-06	0.0007	1.13 ppmv	
CO2	0.0000	0.0000		
H2O	14.3990	86.0485		
O2	15.9311	95.2045		
N2	67.1550	401.3185		
Ar	0.7985	4.7717		
	100.0000	597.6007		

Specifications Thermal Oxidizer				
Duty (MMBTU/h)	1.583			
VOC Destruction (%)	99.9		V1 (ft3/h)	389370.46
Exit Temperatur (°F)	414.5	485.65	T1 (°F)	414,5
Flue gas (lb/h)	16,081		T2 (°F)	68
Density (lb/ft3)	0.0413			
Volume flow (ft3/h)	389,370.46			
SCFM (68°F, 14 psi)	3,917.22	0.978		

Flue Gas Component	**Molar Flow (lbmol/h)**	**MW**	**lb/hr**	**STPY**	**Conc. (lb/ft3)**	**Conc. (mg/m3)**	**Conc. (ppmv)**
C1	0.001	16.04	0.02	0.07	4.24E-08	6.80E-01	1.69E+00
Ethylene	0.003	28.05	0.08	0.35	2.04E-07	3.27E+00	4.65E+00
C2	0.002	30.07	0.06	0.28	1.65E-07	2.64E+00	3.50E+00
C3	0.003	44.1	0.11	0.49	2.87E-07	4.61E+00	4.16E+00
iC4	0.001	58.12	0.06	0.27	1.56E-07	2.50E+00	1.72E+00
nC4	0.000	58.12	0.01	0.04	2.63E-08	4.22E-01	2.90E-01
Sum VOC	0.010	35.17	**0.34**	**1.50**	8.81E-07	1.41E+01	16.0
SO2	0.0007	64.1	0.04	**0.20**	1.16E-07	1.85E+00	1.15

	Emission Factor *** (lb/MMBtu, LHV basis)	Emission (lb/h)	Emission (US tpy)	Conc. (lb/ft3)	Conc. (mg/m3)	Conc. (ppmv)
Carbon monoxide	0.31	4.91E-01	**2.15E+00**	1.26032E-06	2.02E+01	**28.7**
Nitrogen oxides	0.068	1.08E-01	**4.71E-01**	2.76457E-07	4.43E+00	**3.84**

Operating hours/year (purge and B.S.) - Flare pilot Emissions 168

Refinery capacity

55,000	bbl/d
55	Mbbl/d
0.055	MMbbl/d

Blowdown Operations (1)

Blowdown hours 168

		Blowdown	
Criteria Pollutant	lb/Mbbl Refinery Capacity	Emission (lb/h)	Emission (STPY)
Carbon monoxide (CAS No. 630-08-0)	4.3	9.9	0.828
Nitrogen oxides	19	43.5	3.658
SOX	27	61.9	5.198
VOC	0.8	1.8	0.154
SOOT ($PM_{2.5}$-FIL) from Lightly smoking flares (2)	0.027	0.1	0.005

Reference 1: "Emissions Estimation Protocol for Petroleum Refineries, Table 5-12 *"Default Emission Factors for Blowdown Systems"*

Assumption: Controlled emissions of a blowdown system with vapor recovery and flaring

Reference 2: "Emissions Estimation Protocol for Petroleum Refineries, Table 6-3 *"Emission Factors for Soot from Flares"*

Calculated using the LHV energy consumption-based emission factor

		BAT*
Vacuum feed bbl/day	26,000.00	0
Operating hours/year	8,760	

	Emissions Factor(lb/Mbbl of vacuum feed)*	Vacuum feed Mbbl/day	Emission (lb/d)	Emission (TPY)
Total hydrocarbons	0	0	0	0.00

Total hydrocarbon may be estimated as a surrogate for VOC. (Overall, less than 1 weight % of total hydrocarbon emissions is methane.)
Emission factors based on Table 5.1-1, AP-42, Chapter 5.1: Petroleum Refining.
*The purge is recovered and sent to fuel gas system (that's within the design), and those emissions are 0.
Any equipment leaks leading to the vacuum system are accounted in the LDAR program.

Refinery capacity

	55,000	bbl/d
	55	Mbbl/d
	0.055	MMbbl/d

Number of flares	4		Number of pilots	20
Fuel Gas to Pilots (SCF/h) (each pilot)	100	scf/h		
Flare hours	168	h		
		year		

Case: Normal operation	
Heating Value (MMBTU / SCF) (Natural Gas)=	0.00052
Fuel Gas to Pilots (SCF/h) (each flare)	100
LHV (MMBTU/h)	1.04

	HC Emergency Flare 1	HC Emergency Flare 2	Acid Flare	Enclosed HC Operating Flare
Number of Pilots	3	3	2	12
LHV (MMBTU/h)	0.156	0.156	0.104	0.624

Flare HAP

FOR 168 Hours of flaring

HAP	Emission Factor (tons/yr/bbl/d)	Emission (TPY)	lb/h-flaring
Benzene	9.00E-06	9.49E-06	1.13E-04
Toluene	7.00E-06	7.38E-06	8.79E-05
Xylene	6.00E-06	6.33E-06	7.53E-05
Methyl tertiary-butyl ether	3.00E-06	3.16E-06	3.77E-05
Hexane	1.00E-05	1.05E-05	1.26E-04
Formaldehyde	1.00E-06	1.05E-06	1.26E-05
Ethylbenzene	2.00E-07	2.11E-07	2.51E-06
1,3-Butadiene	7.00E-06	7.38E-06	8.79E-05
Total HAP (TPY)		4.56E-05	5.42E-04

MBBL	9.0 E-06 Ton-	2000 lb	y
d	yr-Mbbl	ton	8760 h-flaring

0.000113 lb	h-flaring	ton
h-flaring	yr	2000 lb

Reference: "Emissions Estimation Protocol for Petroleum Refineries, Table 6-4 *"Flare General Emission Factors"*

Flare Pilot Operations

	8760	h
		y
Conversion	1020	BTU / SCF

Pilot Emissions (lb/h)

								Emissions (lb/h)
				EF (lb/MMBTU)*	CO	Pb	PM total	PM COND
Flare	# Pilots	NG Flow/Pilot	NG SCF/h	MMBTU/h	0.0280000	0.0000005	0.0040000	0.0030000
HC Emergency Flare 1	3	100	300	0.306	8.57E-03	1.50E-07	1.22E-03	9.18E-04
HC Emergency Flare 2	3	100	300	0.306	8.57E-03	1.50E-07	1.22E-03	9.18E-04
Acid Flare	2	100	200	0.204	5.71E-03	1.00E-07	8.16E-04	6.12E-04
Enclosed HC Operating Flare	12	100	1200	1.224	3.43E-02	6.00E-07	4.90E-03	3.67E-03
				Total (lb/h)	**5.71E-02**	**1.00E-06**	**8.16E-03**	**6.12E-03**
				Total (STPY)	**0.25**	**4.38E-06**	**0.04**	**0.03**

					Emissions (lb/h)			
				EF (lb/MMBTU)*	PM FILT	NOX	SO2	VOC
Flare	# Pilots	NG Flow/Pilot	NG SCF/h	MMBTU/h	0.0010000	0.0300000	0.0005882	0.0053922
HC Emergency Flare 1	3	100	300	0.306	3.06E-04	9.18E-03	1.80E-04	1.65E-03
HC Emergency Flare 2	3	100	300	0.306	3.06E-04	9.18E-03	1.80E-04	1.65E-03
Acid Flare	2	100	200	0.204	2.04E-04	6.12E-03	1.20E-04	1.10E-03
Enclosed HC Operating Flare	12	100	1200	1.224	1.22E-03	3.67E-02	7.20E-04	6.60E-03
				Total (lb/h)	**2.04E-03**	**6.12E-02**	**1.20E-03**	**1.10E-02**
				Total (STPY)	**0.01**	**0.27**	**0.01**	**0.05**

*Calculated based on the TABLE 1.4-2. AP 42, Fifth Edition, Volume IChapter 1: External Combustion Sources.

DATA

Operating Hours	8760	yr
Charge	55,000.00	bbl/day
Water Density	8.34	lb/gal

Process Unit	Average Throughput of the Unit (bbl/d)	Average Waste Water Flow Factor (gal/bbl) (a)	Waste Water Flow (gal/d)**	Average Benzene Concentration (ppmw) (a)	Benzene Mass Flow (lb/d) Uncontrolled	Benzene Mass Flow (lb/d) Controlled
Desalter Charge*	55,000	0.05	115,644	21	20.254	1.013
Alkylation unit	5,388	6	-	3	-	-
Catalytic reforming	12,720	1.5	-	106	-	-
Hydrotreating/hydrorefining	47,418	2.6	-	6.3	-	-
Catalytic cracking	14,376	2.4	-	13	-	-
Product blending	32,221	2.9	-	24	-	-
Sulfur plant*	11.37	9.7	110.3	0.8	0.001	0.000
Isomerization	3,362	1.5	-	33	-	-
Tank drawdown	110,586	0.02	2,212	188	3.468	0.173
				Total	**23.72**	1.186

* Estimated from process data for the desalter.
*This flow factor is given in gal/ton of sulfur
** WWTP engineering data
*** Assumes VSEP pretreatment or similar pretreatment of inflow into API (or in lieu of API)

95% Assumed Efficiency

YES	Pretreatment Control *** Yes/No?

CALCULATIONS

Mass Flow Benzene 1.19 $\frac{\text{lb}}{\text{day}}$

Example

	Benzene Mass Ratio			Mass Flow lb/d	
Toluene	3.3	$\frac{1.19 \text{ lb}}{\text{day}}$	=	3.91	$\frac{\text{Toluene lb}}{\text{day}}$

	Benzene Mass Ratio (b)	Mass Flow (lb/d)	Mass Fraction Table 7-10 BWON (C)	Emissions (STPY)	Emissions (STPY) Controlled	Emissions (lb/h) Controlled
Total VOC	81	96.08	0.6	10.52	**10.52**	**2.40**
2,2,4- Trimethylpentane	1.97	2.34	0.55	0.23	**1.06E-01**	**2.41E-02**
Benzene	1	1.19	0.25	0.05	**2.44E-02**	**5.56E-03**
Biphenyl	0.034	0.04	0.031	2.28E-04	**1.03E-04**	**2.34E-05**
Cresols	0.25	0.30	0	0.00E+00	**0.00E+00**	**0.00E+00**
Cumene	0.37	0.44	0.24	0.02	**8.65E-03**	**1.97E-03**
Ethylbenzene	0.88	1.04	0.22	0.04	**1.89E-02**	**4.31E-03**
Hexane	3.5	4.15	0.55	0.42	**1.88E-01**	**4.28E-02**
Methyl tertiary-butyl ether	0.58	0.69	0.091	0.01	**5.14E-03**	**1.17E-03**
Naphthalene	0.29	0.34	0.098	0.01	**2.77E-03**	**6.32E-04**
Phenol	0.18	0.21	0	0.00	**0.00E+00**	**0.00E+00**
Styrene	0.58	0.69	0.64	0.08	**3.62E-02**	**8.26E-03**
Toluene	3.3	3.91	0.19	0.14	**6.11E-02**	**1.39E-02**
Xylene	3.6	4.27	0.21	0.16	**7.36E-02**	**1.68E-02**
1,3-Butadiene	0.0006	0.00	0.75	0.00	**4.38E-05**	**1.00E-05**
			Total HAP (Uncontrolled)	1.16	5.24E-01	1.20E-01
			Total HAP (Controlled)	0.524		

55% Efficiency by use of activated carbon filters in API Separator

PROPOSED CONTROL OF HAP TO THE WWTS

The HAP contribution exceeds the 10 TPY limit for this pollutant. Existing technology can remove the benzene directly from the streams that are contributing the highest load.

The technology can remove at a minimum 90% of the benzene. The Catalytic Reformer and the Product Blending process sewers would have to be segregated and lifted to the pretreatment unit prior to discharge to the WWTS

The efficiency must be at least 82% to achieve the reduction in emissions necessary

(a) Table 7-8. Model Process Unit Characteristics for Petroleum Refinery Wastewater

(b) Table 7-9. Refinery Wastewater Contaminant Concentrations as a Ratio to Benzene

(c) Table 7-10. Default Mass Emission Factors for Refinery Wastewater Collection and Treatment Systems

Tables adpted from the Emissions Estimation Protocol for Petroleum Refineries, Version 3, RTI International.

Design Cooling Water Circulation
Rate (Mgpm): 3 Three cells, 1,500 gpm each, two operating one on standby
Operating hours/year 8760
Water density 8.34 lb/gal

Emission	Emission Factor* (lb/Mgal)	TDS Concentration (ppm)	Emission (lb/h)	Emission (STPY)
VOC	0.006	-	8.10E-02	3.55E-01
PM10	0.0315	14,279	4.25E-01	1.86E+00

*Emission Factos shown here correspond only to induced draft, counter flow.

PM Emission Calculation

Water Drift Factor (lb/Mgal) 625.5
0.005% of drift factor for a water loss of 0.075 GPM

$$\frac{625.5 \text{ lb H2O Drift}}{\text{Mgal}} \cdot \frac{3 \text{ Mgal H2O}}{\text{minute}} = 1876.5 \frac{\text{lb H2O Drift}}{\text{minute}}$$

$$\frac{1876.5 \text{ lb H2O}}{\text{minute}} \cdot \frac{60 \text{ minute}}{\text{hour}} \cdot \frac{\text{gal}}{8.3378 \text{ lb}} = 13503.56 \frac{\text{gal Drift}}{\text{hour}}$$

$$\frac{13503.56 \text{ gal Drift}}{\text{hour}} \cdot \frac{0.0315 \text{ lb PM}}{\text{Mgal}} \cdot \frac{\text{Mgal}}{1000 \text{ gal}} = 4.25\text{E-}01 \frac{\text{lb PM}}{\text{hour}}$$

$$\frac{0.0315 \text{ lb}}{\text{Mgal}} \cdot \frac{\text{kg}}{2.206 \text{ lb}} \cdot \frac{1 \text{ E06 mg}}{\text{kg}} \cdot \frac{\text{ppm}}{\text{mg}} = 14279 \text{ ppm}$$

VOC Calculation

$$\frac{625.5 \text{ lb H2O Drift}}{\text{Mgal}} \cdot \frac{\text{Mgal H2O}}{\text{minute}} = 1876.5 \frac{\text{lb H2O Drift}}{\text{minute}}$$

$$\frac{1876.5 \text{ lb H2O}}{\text{minute}} \cdot \frac{60 \text{ minute}}{\text{hour}} \cdot \frac{\text{gal}}{8.3378 \text{ lb}} = 13503.56 \frac{\text{gal Drift}}{\text{hour}}$$

$$\frac{13503.56 \text{ gal Drift}}{\text{hour}} \cdot \frac{0.006 \text{ lb PM}}{\text{Mgal}} \cdot \frac{\text{Mgal}}{1000 \text{ gal}} = 8.10\text{E-}02 \frac{\text{lb PM}}{\text{hour}}$$

Operating hours/year: 5840 (2 - 8 hr shifts per day)

Refinery production	bbl/d	gal/d	Notes	gal/year
Crude oil	55,000	2,310,000		20,075,000
Gasoline	22,666	951,962	Including offspec gasoline/naphtha and light slop	8,272,999
Jet Kerosene	6,349	266,648		2,317,294
Diesel	8,327	349,745	Including offspec diesel/fuel oil	3,039,446
Fuel Oil	3,797	159,474	Including heavy slop	1,385,905

Description	EF (lb/Mgal)1	Uncontrolled Emissions (lb/h)	Uncontrolled Emissions (TPY)	Control Device	% Efficiency	Actual Emissions (TPY)	Actual Emissions (lb/h)
Crude oil	2	193	562	NG Assisted Flare or VRU	99.85%	0.83	0.19
Gasoline+butane	5	198	579	NG Assisted Flare or VRU	99.85%	0.86	0.20
Jet Kerosene	0.016	0.2	0.5	None	0.00%	0.52	0.12
Diesel No. 2	0.014	0.2	0.6	None	0.00%	0.60	0.14
Fuel Oil No. 6	0.0001	0.001	0.002	None	0%	0.002	0.0004
	Totals	391	1,142			2.81	0.64

Reference 1

AP-42 Table 5.2-5 TOTAL UNCONTROLLED ORGANIC EMISSION FACTORS FOR PETROLEUM LIQUID RAIL TANK CARS AND TANK TRUCKS, AP 42, Fifth Edition, Volume I Chapter 5: Transportation And Marketing Of Petroleum Liquids.

Operating hours/year: 5840 (2 - 8 hr shifts per day)

Refinery production	bbl/d	gal/d	Notes	gal/year
Crude oil	-	-		-
Gasoline+butane	9,555	401,321	Including offspec gasoline/naphtha and light slop	3,487,666
Jet Kerosene	2,116	88,883		772,431
Diesel	2,776	116,582	Including offspec diesel/fuel oil	1,013,149
Fuel Oil	-	-	Including heavy slop	-

Description	EF (lb/Mgal)1	Uncontrolled Emissions (lb/h)	Uncontrolled Emissions (TPY)	Control Device	% Efficiency	Actual Emissions (TPY)	Actual Emissions (lb/h)
Crude oil	2	-	-	None	0%	0.0	0.0
Gasoline+butane	5	84	244	NG Assisted Flare or VRU	99.85%	0.36	0.1
Jet Kerosene	0.016	0.1	0.2	None	0%	0.17	0.0
Diesel No. 2	0.014	0.1	0.2	None	0%	0.20	0.0
Fuel Oil No. 6	0.0001	-	-	None	0%	0.00	0.0
	Totals	84	245			0.73	0.17

Reference 1

AP-42 Table 5.2-5 TOTAL UNCONTROLLED ORGANIC EMISSION FACTORS FOR PETROLEUM LIQUID RAIL TANK CARS AND TANK TRUCKS, AP 42, Fifth Edition, Volume I Chapter 5: Transportation And Marketing Of Petroleum Liquids.

BASIS

It is assumed that crude oil inlet is via rails, not trucking. Also, it is assumed that 25% of liquid products (excep fuel oil) are loaded and transported via trucking; actual emissions might be lower, since in the future more volume may be transported via railroad.

Refinery production	bbl/d	gal/d	Notes	Truck Capacity (gallon)	trips/day
Gasoline+butane	9,555	401,321	Including offspec gasoline/naphtha and light slop	10000	40
Jet Kerosene	2,116	88,883		8000	11
Diesel	2,776	116,582	Including offspec diesel/fuel oil	6000	19
LPG	1,500	63,000	Including heavy slop	6000	11
				Total	81

Truck Round Trip Distance/trip 0.0379 mile

5280 feet / mile

200 feet traveled

TRUCK LOADING VMT

$$\frac{81\ \text{Trip}}{\text{day}} \cdot \frac{0.04\ \text{mile}}{\text{Round Trip}} \cdot \frac{365\ \text{day}}{\text{year}} = 1{,}120\ \frac{\text{VMT}}{\text{year}}$$

$$= 3.07\ \frac{\text{VMT}}{\text{d}}$$

Maximum Gross Weight for USDOT tractor trailer

80000 lb

40 ton

Average Speed

5 mile / hr

Wet days (Mean) 90 day

P (Value) 2160 hour

N (Value) 8760 hour

TRUCK VMT IN LIMITED ACCESS ROAD

Pollutant	k (lb/VMT)	Silt L (grain/sq ft) [2]	W (ST)	N (hour)	P (hour)	Emission Factor (lb/VMT)
PM 2.5	0.00054	2.15E-02	40	8760	2160	0.001
PM 10	0.0022	2.15E-02	40	8760	2160	0.003

PM 2.5 Emissions

$$\frac{0.001\ \text{lb}}{\text{VMT}} \cdot \frac{3.07\ \text{VMT}}{\text{d}} \cdot \frac{\text{d}}{24\ \text{h}} = 8.47\text{E-}05\ \frac{\text{lb PM 2.5}}{\text{h}}$$

$$\frac{0.001\ \text{lb}}{\text{VMT}} \cdot \frac{3.07\ \text{VMT}}{\text{d}} \cdot \frac{365\ \text{day}}{\text{year}} \cdot \frac{\text{ton}}{2000\ \text{lb}} = 3.71\text{E-}04\ \frac{\text{Ton PM 2.5}}{\text{Year}}$$

$$\frac{0.001\ \text{lb}}{\text{VMT}} \cdot \frac{3.07\ \text{VMT}}{\text{d}} \cdot \frac{\text{d}}{24\ \text{h}} \cdot \frac{\text{h}}{3600\ \text{s}} \cdot \frac{\text{kg}}{2.206\ \text{lb}} \cdot \frac{1000\ \text{g}}{\text{s}} = 1.07\text{E-}05\ \frac{\text{g PM 2.5}}{\text{s}}$$

PM 10 Emissions

$$\frac{0.003\ \text{lb}}{\text{VMT}} \cdot \frac{3.07\ \text{VMT}}{\text{d}} \cdot \frac{\text{d}}{24\ \text{h}} = 3.45\text{E-}04\ \frac{\text{lb PM TOT}}{\text{h}}$$

$$\frac{0\ \text{lb}}{\text{VMT}} \cdot \frac{3.07\ \text{VMT}}{\text{d}} \cdot \frac{365\ \text{day}}{\text{year}} \cdot \frac{\text{ton}}{2000\ \text{lb}} = 1.51\text{E-}03\ \frac{\text{Ton PM TOT}}{\text{Year}}$$

$$\frac{0.003\text{lb}}{\text{VMT}} \cdot \frac{3.07\ \text{VMT}}{\text{d}} \cdot \frac{\text{d}}{24\ \text{h}} \cdot \frac{\text{h}}{3600\ \text{s}} \cdot \frac{\text{kg}}{2.206\ \text{lb}} \cdot \frac{1000\ \text{g}}{\text{s}} = 5.37\text{E-}04\ \frac{\text{g PM TOT}}{\text{s}}$$

Assumption Silt loading at the lower range of values since the vehicles will not exceed 5 MPH, and will not be involved in heavy braking

EMPLOYEE PARKING VMT

Employees/shift	Shifts	Trips
100	2	200

Employee Round Trip Distance/trip

0.1894 mile

5280 feet / mile

1000 feet traveled

Vehicle Miles Traveled

200 Trip / day	0.19 mile / Round Trip	365 day / year	=	13,826 VMT / year

= 37.88 VMT / d

Average Gross Weight Vehicle [1]

3600 lb

1.8 ton

Average Speed

5 mile / hr

Wet days (Mean) 90 day

P (Value) 2160 hour

N (Value) 8760 hour

EMPLOYEE VMT IN LIMITED ACCESS PARKING LOT

Pollutant	k (lb/VMT)	Silt L (grain/sq ft) [2]	W (ST)	N (hour)	P (hour)	Emission Factor (lb/VMT)
PM 2.5	0.00054	2.15E-02	1.8	8760	2160	2.80E-05
PM 10	0.0022	2.15E-02	1.8	8760	2160	1.14E-04

PM 2.5 Emissions

0.000028 lb / VMT	37.88 VMT / d	d / 24 h	=	4.42E-05 lb PM 2.5 / h

0.00003 lb / VMT	37.88 VMT / d	365 day / year	ton / 2000 lb	=	1.94E-04 Ton PM 2.5 / Year

0.00003 lb / VMT	37.88 VMT / d	d / 24 h	h / 3600 s	kg / 2.206 lb	1000 g / s	=	5.57E-06 g PM 2.5 / s

PM 10 Emissions

0.0001142 lb / VMT	37.88 VMT / d	d / 24 h	=	1.80E-04 lb PM TOT / h

0.00011 lb / VMT	37.88 VMT / d	365 day / year	ton / 2000 lb	=	7.89E-04 Ton PM TOT / Year

0.00011 lb / VMT	37.88 VMT / d	d / 24 h	h / 3600 s	kg / 2.206 lb	1000 g / s	=	2.27E-05 g PM TOT / s

Assumption Silt loading at the lower range of values since the vehicles will not exceed 5 MPH, and will not be involved in heavy braking

[1] Passenger Car and Light Truck Fleets Characteristics, Corporate Average Fuel Economy (CAFE) standards
http://www.nhtsa.gov/cars/rules/CAFE/NewPassengerCarFleet.htm

[2] AP 42 Emission Factors, Fifth Edition, Volume I, Section 13.2.1. Paved Roads, Silt loading factor for limited access roads, page 13.2.1-9

Spent Catalyst Handling

Data

8.614	ton catalyst/14 day
14	day maintenance schedule
70000	bbl/day

Calculations

Spent Catalyst Production

$$\frac{8.614\ \text{ton}}{} \cdot \frac{2000\ \text{lb}}{\text{ton}} \cdot \frac{}{14\ \text{day}} = 1231\ \frac{\text{lb PM}}{\text{day}}$$

Percentage of catalyst suspended in the air during transfer into the bi 15%

$$\frac{1230.6\ \text{lb}}{\text{day}} \cdot \frac{15\%}{} = 184.59\ \frac{\text{lb PM}}{\text{day}}$$

Controlled Emissions 95% efficiency

$$\frac{184.6\ \text{lb}}{\text{day}} \cdot \frac{\text{day}}{70000\ \text{bbl}} \cdot \frac{(1-0.95)}{} = 1.32\text{E-}04\ \frac{\text{lb PM}}{\text{bbl}}$$

Emissions for 365 day operation, 55 000 barrel/day

$$\frac{0.0001\ \text{lb}}{\text{bbl}} \cdot \frac{55000\ \text{bbl}}{\text{day}} \cdot \frac{365\ \text{day}}{\text{year}} = 2646.83\ \frac{\text{lb PM}}{\text{year}}$$

$$\frac{2646.8\text{lb}}{\text{year}} \cdot \frac{\text{yr}}{2000\ \text{lb}} = 1.32\ \frac{\text{ton PM}}{\text{year}}$$

Operating hours/yr:																					
100			EMERGENCY GENERATOR SET						FIREWATER DIESEL PUMP												
			Power (MW)	3.5	HP	4693.5			HP	600	GPH = (specific fuel consumption x HP)/Fuel Specific Weight										
sulfur content in diesel	0.05%		Fuel consumption (gph)	423	Diesel Energy Content (MMBTU/gal)	0.137	MMBTUh	57.96	Fuel consumption (gph)	33.33	Diesel Energy Content (MMBTU/gal)	0.137	MMBTUh	4.57							
			216-EG-1601A		216-EG-1601B		216-EG-1601C		212-P-1201 A		212-P-1201 B		212-P-1201 C								
Criteria Pollutants	Emission Factor		Emission (lb/h)	Emission (STPY)	Emission (lb/h)	Emission (STPY)	Emission (lb/h)	Emission (STPY)	Emission (lb/h)	Emission (STPY)	Emission (lb/h)	Emission (STPY)	Emission (lb/h)	Emission (STPY)	Total Emissions Gen Set (lb/h)	Total Emissions Gen Set (STPY)	Total Emissions FWP (lb/h)	Total Emissions FWP (STPY)	Total Emissions (lb/h)	Total Emissions (STPY)	
	lb/HP-hr	lb/MMBTU																			
Carbon Monoxide	0.0055		25.8	1.29	25.8	1.3	25.8	1.3	3.3	0.17	3.3	0.2	3.3	0.2	77.44	3.87	9.90	0.50	87.34	4.37	
PM	0.0007		3.29	0.16	3.29	0.16	3.29	0.16	0.42	0.02	0.42	0.02	0.42	0.02	9.86	0.49	1.26	0.06	11.12	0.56	
PM 10 (Total)		0.0573	3.32	0.17	3.3	0.2	3.3	0.2	0.26	0.01	0.26	0.01	0.26	0.01	9.96	4.98E-01	7.85E-01	3.93E-02	10.75	5.37E-01	
PM 10 (Filterable)		0.0496	2.87	0.14	2.9	0.1	2.9	0.1	0.23	0.01	0.23	0.01	0.23	0.01	8.62	4.31E-01	6.80E-01	3.40E-02	9.30	4.65E-01	
PM 2.5 (Total)		0.0479	2.78	0.14	2.8	0.1	2.8	0.1	0.22	0.01	0.22	0.01	0.22	0.01	8.33	4.16E-01	6.56E-01	3.28E-02	8.99	4.49E-01	
PM 2.5(Filterable)		0.0479	2.78	0.14	2.8	0.1	2.8	0.1	0.22	0.01	0.22	0.01	0.22	0.01	8.33	4.16E-01	6.56E-01	3.28E-02	8.99	4.49E-01	
PM (Condensable)		0.0077	0.45	0.02	0.4	0.0	0.4	0.0	0.04	0.00	0.04	0.00	0.04	0.00	1.34	6.69E-02	1.06E-01	5.28E-03	1.44	7.22E-02	
NOx*	0.013		61.0	3.05	61.0	3.1	61.0	3.1	7.8	0.39	7.80	0.39	7.80	0.39	183.05	9.15	23.40	1.17	206.45	10.32	
SOx	4.05E-06		1.90E-02	9.49E-04	1.90E-02	9.49E-04	1.90E-02	9.49E-04	2.43E-03	1.21E-04	2.43E-03	1.21E-04	2.43E-03	1.21E-04	5.70E-02	2.85E-03	7.28E-03	3.64E-04	6.42E-02	3.21E-03	
TOC (as VOC)	7.05E-04		3.31	0.17	3.31	0.17	3.31	0.17	0.42	0.02	0.42	0.02	0.42	0.02	9.93	4.96E-01	1.27	6.35E-02	11.20	5.60E-01	
Org HAP (Total)			2.53E-01	1.26E-02	2.53E-01	1.26E-02	2.53E-01	1.26E-02	1.99E-02	9.97E-04	1.99E-02	9.97E-04	1.99E-02	9.97E-04	7.59E-01	3.79E-02	5.98E-02	2.99E-03	8.19E-01	4.09E-02	

*Controlled by ignition timing retard

From AP-42 Chapter 3 Section 3.4. Large Stationary Diesel And All Stationary Dual-fuel Engines. Table 3.4-1. GASEOUS EMISSION FACTORS FOR LARGE STATIONARY DIESEL AND ALL STATIONARY DUAL-FUEL ENGINES and Table 3.4-2. PARTICULATE AND PARTICLE-SIZING EMISSION FACTORS FOR LARGE UNCONTROLLED STATIONARY DIESEL ENGINES

EMERGENCY GENERATOR SET x 3 Engines

Volatile HAPS	lb/MMBTU	lb/hr	Emission (STPY)	lb/hr	Emission (STPY)
Benzene	7.76E-04	4.50E-02	2.25E-03	1.35E-01	6.75E-03
Toluene	2.81E-04	1.63E-02	8.14E-04	4.89E-02	2.44E-03
Xylene	1.93E-04	1.12E-02	5.59E-04	3.36E-02	1.68E-03
Propylene	2.79E-03	1.62E-01	8.09E-03	4.85E-01	2.43E-02
Formaldehyde	7.89E-05	4.57E-03	2.29E-04	1.37E-02	6.86E-04
Acetaldehyde	2.52E-05	1.46E-03	7.30E-05	4.38E-03	2.19E-04
Acrolein	7.88E-06	4.57E-04	2.28E-05	1.37E-03	6.85E-05
TOTAL VOLATILE HAPS		**2.41E-01**	**1.20E-02**	**7.22E-01**	**3.61E-02**
PAHs					
Naphthalene	1.30E-04	7.54E-03	3.77E-04	2.26E-02	1.13E-03
Acenaphthylene	9.23E-06	5.35E-04	2.68E-05	1.61E-03	8.03E-05
Acenaphthene	4.68E-06	2.71E-04	1.36E-05	8.14E-04	4.07E-05
Fluorene	1.28E-05	7.42E-04	3.71E-05	2.23E-03	1.11E-04
Phenanthrene	4.08E-05	2.36E-03	1.18E-04	7.09E-03	3.55E-04
Anthracene	1.23E-06	7.13E-05	3.56E-06	2.14E-04	1.07E-05
Fluoranthene	4.03E-06	2.34E-04	1.17E-05	7.01E-04	3.50E-05
Pyrene	3.71E-06	2.15E-04	1.08E-05	6.45E-04	3.23E-05
Benz(a)anthracene	6.22E-07	3.61E-05	1.80E-06	1.08E-04	5.41E-06
Chrysene	1.53E-06	8.87E-05	4.43E-06	2.66E-04	1.33E-05
Benzo(b)fluoranthene	1.11E-06	6.43E-05	3.22E-06	1.93E-04	9.65E-06
Benzo(k)fluoranthene	2.18E-07	1.26E-05	6.32E-07	3.79E-05	1.90E-06
Benzo(a)pyrene	2.57E-07	1.49E-05	7.45E-07	4.47E-05	2.23E-06
Indeno(1,2,3-cd)pyrene	4.14E-07	2.40E-05	1.20E-06	7.20E-05	3.60E-06
Dibenz(a,h)anthracene	3.46E-07	2.01E-05	1.00E-06	6.02E-05	3.01E-06
Benzo(g,h,I)perylene	5.56E-07	3.22E-05	1.61E-06	9.67E-05	4.83E-06
TOTAL PAH	**2.12E-04**	**1.23E-02**	**6.14E-04**	**3.69E-02**	**1.84E-03**

FIREWATER PUMPS x 3 Engines

Volatile HAPS	lb/MMBTU	lb/hr	Emission (STPY)	lb/hr	Emission (STPY)
Benzene	7.76E-04	3.54E-03	1.77E-04	1.06E-02	5.32E-04
Toluene	2.81E-04	1.28E-03	6.42E-05	3.85E-03	1.93E-04
Xylene	1.93E-04	8.82E-04	4.41E-05	2.64E-03	1.32E-04
Propylene	2.79E-03	1.27E-02	6.37E-04	3.82E-02	1.91E-03
Formaldehyd	7.89E-05	3.60E-04	1.80E-05	1.08E-03	5.41E-05
Acetaldehyde	2.52E-05	1.15E-04	5.76E-06	3.45E-04	1.73E-05
Acrolein	7.88E-06	3.60E-05	1.80E-06	1.08E-04	5.40E-06
TOTAL VOLATILE HAPS		**1.90E-02**	**9.48E-04**	**5.69E-02**	**2.84E-03**
PAHs					
Naphthalene	1.30E-04	5.94E-04	2.97E-05	1.78E-03	8.91E-05
Acenaphthyle	9.23E-06	4.22E-05	2.11E-06	1.26E-04	6.32E-06
Acenaphthen	4.68E-06	2.14E-05	1.07E-06	6.41E-05	3.21E-06
Fluorene	1.28E-05	5.85E-05	2.92E-06	1.75E-04	8.77E-06
Phenanthren	4.08E-05	1.86E-04	9.32E-06	5.59E-04	2.80E-05
Anthracene	1.23E-06	5.62E-06	2.81E-07	1.69E-05	8.43E-07
Fluoranthene	4.03E-06	1.84E-05	9.20E-07	5.52E-05	2.76E-06
Pyrene	3.71E-06	1.69E-05	8.47E-07	5.08E-05	2.54E-06
Benz(a)anthr	6.22E-07	2.84E-06	1.42E-07	8.52E-06	4.26E-07
Chrysene	1.53E-06	6.99E-06	3.49E-07	2.10E-05	1.05E-06
Benzo(b)fluo	1.11E-06	5.07E-06	2.54E-07	1.52E-05	7.61E-07
Benzo(k)fluo	2.18E-07	9.96E-07	4.98E-08	2.99E-06	1.49E-07
Benzo(a)pyre	2.57E-07	1.17E-06	5.87E-08	3.52E-06	1.76E-07
Indeno(1,2,3-	4.14E-07	1.89E-06	9.46E-08	5.67E-06	2.84E-07
Dibenz(a,h)a	3.46E-07	1.58E-06	7.90E-08	4.74E-06	2.37E-07
Benzo(g,h,I)p	5.56E-07	2.54E-06	1.27E-07	7.62E-06	3.81E-07
TOTAL PAH	**2.12E-04**	**9.68E-04**	**4.84E-05**	**2.91E-03**	**1.45E-04**

From AP-42 Chapter 3 Section 3.4. Large Stationary Diesel And All Stationary Dual-fuel Engines. Table 3.4-3. SPECIATED ORGANIC COMPOUND EMISSION FACTORS FOR LARGE UNCONTROLLED STATIONARY DIESEL ENGINES and Table 3.4-4. PAH EMISSION FACTORS FOR LARGE UNCONTROLLED STATIONARY DIESEL ENGINES

TANKS 4.09d SOFTWARE RUNS

TANKS 4.0.9d
Emissions Report - Detail Format
Tank Indentification and Physical Characteristics

Identification

User Identification:	203-T-0001
City:	Belfield
State:	North Dakota
Company:	Meridian
Type of Tank:	Internal Floating Roof Tank
Description:	Crude Oil

Tank Dimensions

Diameter (ft):	115.00
Volume (gallons):	4,661,968.00
Turnovers:	60.25
Self Supp. Roof? (y/n):	Y
No. of Columns:	0.00
Eff. Col. Diam. (ft):	0.00

Paint Characteristics

Internal Shell Condition:	Light Rust
Shell Color/Shade:	Gray/Light
Shell Condition	Good
Roof Color/Shade:	Gray/Light
Roof Condition:	Good

Rim-Seal System

Primary Seal:	Mechanical Shoe
Secondary Seal	Rim-mounted

Deck Characteristics

Deck Fitting Category:	Detail
Deck Type:	Welded

Deck Fitting/Status	Quantity
Access Hatch (24-in. Diam.)/Bolted Cover, Gasketed	1
Automatic Gauge Float Well/Bolted Cover, Gasketed	1
Roof Leg or Hanger Well/Fixed	39
Sample Pipe or Well (24-in. Diam.)/Slotted Pipe-Sliding Cover, Gask.	1
Vacuum Breaker (10-in. Diam.)/Weighted Mech. Actuation, Gask.	1

Meterological Data used in Emissions Calculations: Bismarck, North Dakota (Avg Atmospheric Pressure = 13.86 psia)

TANKS 4.0.9d
Emissions Report - Detail Format
Liquid Contents of Storage Tank

203-T-0001 - Internal Floating Roof Tank
Belfield, North Dakota

Mixture/Component	Month	Daily Liquid Surf. Temperature (deg F) Avg.	Min.	Max.	Liquid Bulk Temp (deg F)	Vapor Pressure (psia) Avg.	Min.	Max.	Vapor Mol. Weight.	Liquid Mass Fract.	Vapor Mass Fract.	Mol. Weight	Basis for Vapor Pressure Calculations
Crude oil (RVP 5)	Jan	30.90	24.94	36.87	43.84	1.5709	N/A	N/A	50.0000			207.00	Option 4: RVP=5
Crude oil (RVP 5)	Feb	34.98	28.04	41.91	43.84	1.7173	N/A	N/A	50.0000			207.00	Option 4: RVP=5
Crude oil (RVP 5)	Mar	42.09	33.80	50.39	43.84	1.9992	N/A	N/A	50.0000			207.00	Option 4: RVP=5
Crude oil (RVP 5)	Apr	50.10	39.90	60.29	43.84	2.3601	N/A	N/A	50.0000			207.00	Option 4: RVP=5
Crude oil (RVP 5)	May	56.81	45.06	68.55	43.84	2.7017	N/A	N/A	50.0000			207.00	Option 4: RVP=5
Crude oil (RVP 5)	Jun	61.81	49.29	74.32	43.84	2.9814	N/A	N/A	50.0000			207.00	Option 4: RVP=5
Crude oil (RVP 5)	Jul	64.71	51.53	77.88	43.84	3.1539	N/A	N/A	50.0000			207.00	Option 4: RVP=5
Crude oil (RVP 5)	Aug	62.42	50.31	74.54	43.84	3.0174	N/A	N/A	50.0000			207.00	Option 4: RVP=5
Crude oil (RVP 5)	Sep	55.34	45.27	65.40	43.84	2.6237	N/A	N/A	50.0000			207.00	Option 4: RVP=5
Crude oil (RVP 5)	Oct	48.45	40.33	56.58	43.84	2.2821	N/A	N/A	50.0000			207.00	Option 4: RVP=5
Crude oil (RVP 5)	Nov	39.43	33.50	45.36	43.84	1.8896	N/A	N/A	50.0000			207.00	Option 4: RVP=5
Crude oil (RVP 5)	Dec	32.50	27.06	37.95	43.84	1.6272	N/A	N/A	50.0000			207.00	Option 4: RVP=5

TANKS 4.0.9d
Emissions Report - Detail Format
Detail Calculations (AP-42)

203-T-0001 - Internal Floating Roof Tank
Belfield, North Dakota

Month:	January	February	March	April	May	June	July	August	September	October	November	December
Rim Seal Losses (lb):	3.4568	3.8010	4.4754	5.3621	6.2266	6.9539	7.4116	7.0488	6.0270	5.1682	4.2114	3.5887
Seal Factor A (lb-mole/ft-yr):	0.6000	0.6000	0.6000	0.6000	0.6000	0.6000	0.6000	0.6000	0.6000	0.6000	0.6000	0.6000
Seal Factor B (lb-mole/ft-yr (mph)^n):	0.4000	0.4000	0.4000	0.4000	0.4000	0.4000	0.4000	0.4000	0.4000	0.4000	0.4000	0.4000
Value of Vapor Pressure Function:	0.0301	0.0331	0.0389	0.0466	0.0541	0.0605	0.0644	0.0613	0.0524	0.0449	0.0366	0.0312
Vapor Pressure at Daily Average Liquid Surface Temperature (psia):	1.5709	1.7173	1.9992	2.3601	2.7017	2.9814	3.1539	3.0174	2.6237	2.2821	1.8896	1.6272
Tank Diameter (ft):	115.0000	115.0000	115.0000	115.0000	115.0000	115.0000	115.0000	115.0000	115.0000	115.0000	115.0000	115.0000
Vapor Molecular Weight (lb/lb-mole):	50.0000	50.0000	50.0000	50.0000	50.0000	50.0000	50.0000	50.0000	50.0000	50.0000	50.0000	50.0000
Product Factor:	0.4000	0.4000	0.4000	0.4000	0.4000	0.4000	0.4000	0.4000	0.4000	0.4000	0.4000	0.4000
Withdrawal Losses (lb):	194.6791	194.6791	194.6791	194.6791	194.6791	194.6791	194.6791	194.6791	194.6791	194.6791	194.6791	194.6791
Number of Columns:	0.0000	0.0000	0.0000	0.0000	0.0000	0.0000	0.0000	0.0000	0.0000	0.0000	0.0000	0.0000
Effective Column Diameter (ft):	0.0000	0.0000	0.0000	0.0000	0.0000	0.0000	0.0000	0.0000	0.0000	0.0000	0.0000	0.0000
Net Throughput (gal/mo.):	23,406,964.333	323,406,964.333	323,406,964.333	323,406,964.333	323,406,964.333	323,406,964.333	323,406,964.333	323,406,964.333	323,406,964.333	323,406,964.333	323,406,964.333	323,406,964.3333
Shell Clingage Factor (bbl/1000 sqft):	0.0060	0.0060	0.0060	0.0060	0.0060	0.0060	0.0060	0.0060	0.0060	0.0060	0.0060	0.0060
Average Organic Liquid Density (lb/gal):	7.1000	7.1000	7.1000	7.1000	7.1000	7.1000	7.1000	7.1000	7.1000	7.1000	7.1000	7.1000
Tank Diameter (ft):	115.0000	115.0000	115.0000	115.0000	115.0000	115.0000	115.0000	115.0000	115.0000	115.0000	115.0000	115.0000
Deck Fitting Losses (lb):	2.6853	2.9526	3.4766	4.1653	4.8369	5.4019	5.7574	5.4756	4.6819	4.0147	3.2715	2.7878
Value of Vapor Pressure Function:	0.0301	0.0331	0.0389	0.0466	0.0541	0.0605	0.0644	0.0613	0.0524	0.0449	0.0366	0.0312
Vapor Molecular Weight (lb/lb-mole):	50.0000	50.0000	50.0000	50.0000	50.0000	50.0000	50.0000	50.0000	50.0000	50.0000	50.0000	50.0000
Product Factor:	0.4000	0.4000	0.4000	0.4000	0.4000	0.4000	0.4000	0.4000	0.4000	0.4000	0.4000	0.4000
Tot. Roof Fitting Loss Fact.(lb-mole/yr):	53.6000	53.6000	53.6000	53.6000	53.6000	53.6000	53.6000	53.6000	53.6000	53.6000	53.6000	53.6000
Deck Seam Losses (lb):	0.0000	0.0000	0.0000	0.0000	0.0000	0.0000	0.0000	0.0000	0.0000	0.0000	0.0000	0.0000
Deck Seam Length (ft):	0.0000	0.0000	0.0000	0.0000	0.0000	0.0000	0.0000	0.0000	0.0000	0.0000	0.0000	0.0000
Deck Seam Loss per Unit Length Factor (lb-mole/ft-yr):	0.0000	0.0000	0.0000	0.0000	0.0000	0.0000	0.0000	0.0000	0.0000	0.0000	0.0000	0.0000
Deck Seam Length Factor(ft/sqft):	0.0000	0.0000	0.0000	0.0000	0.0000	0.0000	0.0000	0.0000	0.0000	0.0000	0.0000	0.0000
Tank Diameter (ft):	115.0000	115.0000	115.0000	115.0000	115.0000	115.0000	115.0000	115.0000	115.0000	115.0000	115.0000	115.0000
Vapor Molecular Weight (lb/lb-mole):	50.0000	50.0000	50.0000	50.0000	50.0000	50.0000	50.0000	50.0000	50.0000	50.0000	50.0000	50.0000
Product Factor:	0.4000	0.4000	0.4000	0.4000	0.4000	0.4000	0.4000	0.4000	0.4000	0.4000	0.4000	0.4000
Total Losses (lb):	200.8212	201.4327	202.6311	204.2065	205.7426	207.0348	207.8481	207.2034	205.3880	203.8620	202.1619	201.0555

Roof Fitting/Status	Quantity	Roof Fitting Loss Factors KFa(lb-mole/yr)	KFb(lb-mole/(yr mph^n))	m	Losses(lb)
Access Hatch (24-in. Diam.)/Bolted Cover, Gasketed	1	1.60	0.00	0.00	1.4803
Automatic Gauge Float Well/Bolted Cover, Gasketed	1	2.80	0.00	0.00	2.5905
Roof Leg or Hanger Well/Fixed	39	0.00	0.00	0.00	0.0000
Sample Pipe or Well (24-in. Diam.)/Slotted Pipe-Sliding Cover, Gask.	1	43.00	0.00	0.00	39.7827
Vacuum Breaker (10-in. Diam.)/Weighted Mech. Actuation, Gask.	1	6.20	1.20	0.94	5.7361

TANKS 4.0.9d
Emissions Report - Detail Format
Individual Tank Emission Totals

Emissions Report for: January, February, March, April, May, June, July, August, September, October, November, December

203-T-0001 - Internal Floating Roof Tank
Belfield, North Dakota

	Losses(lbs)				
Components	Rim Seal Loss	Withdrawl Loss	Deck Fitting Loss	Deck Seam Loss	Total Emissions
Crude oil (RVP 5)	63.73	2,336.15	49.51	0.00	2,449.39

TANKS 4.0.9d
Emissions Report - Detail Format
Tank Indentification and Physical Characteristics

Identification

User Identification:	203-T-0005
City:	Belfield
State:	North Dakota
Company:	Meridian
Type of Tank:	Internal Floating Roof Tank
Description:	Desulfurized Heavy Naphtha

Tank Dimensions

Diameter (ft):	63.00
Volume (gallons):	1,399,104.00
Turnovers:	26.78
Self Supp. Roof? (y/n):	Y
No. of Columns:	0.00
Eff. Col. Diam. (ft):	0.00

Paint Characteristics

Internal Shell Condition:	Light Rust
Shell Color/Shade:	Gray/Light
Shell Condition	Good
Roof Color/Shade:	Gray/Light
Roof Condition:	Good

Rim-Seal System

Primary Seal:	Liquid-mounted
Secondary Seal	Rim-mounted

Deck Characteristics

Deck Fitting Category:	Detail
Deck Type:	Welded

Deck Fitting/Status	Quantity
Access Hatch (24-in. Diam.)/Bolted Cover, Gasketed	1
Automatic Gauge Float Well/Bolted Cover, Gasketed	1
Roof Leg or Hanger Well/Fixed	39
Sample Pipe or Well (24-in. Diam.)/Slotted Pipe-Sliding Cover, Gask.	1
Vacuum Breaker (10-in. Diam.)/Weighted Mech. Actuation, Gask.	1

Meterological Data used in Emissions Calculations: Bismarck, North Dakota (Avg Atmospheric Pressure = 13.86 psia)

TANKS 4.0.9d
Emissions Report - Detail Format
Liquid Contents of Storage Tank

203-T-0005 - Internal Floating Roof Tank
Belfield, North Dakota

Mixture/Component	Month	Daily Liquid Surf. Temperature (deg F) Avg.	Min.	Max.	Liquid Bulk Temp (deg F)	Vapor Pressure (psia) Avg.	Min.	Max.	Vapor Mol. Weight.	Liquid Mass Fract.	Vapor Mass Fract.	Mol. Weight	Basis for Vapor Pressure Calculations
Gasoline (RVP 6)	Jan	30.90	24.94	36.87	43.84	1.5461	N/A	N/A	69.0000			92.00	Option 4: RVP=6, ASTM Slope=3
Gasoline (RVP 6)	Feb	34.98	28.04	41.91	43.84	1.6990	N/A	N/A	69.0000			92.00	Option 4: RVP=6, ASTM Slope=3
Gasoline (RVP 6)	Mar	42.09	33.80	50.39	43.84	1.9957	N/A	N/A	69.0000			92.00	Option 4: RVP=6, ASTM Slope=3
Gasoline (RVP 6)	Apr	50.10	39.90	60.29	43.84	2.3789	N/A	N/A	69.0000			92.00	Option 4: RVP=6, ASTM Slope=3
Gasoline (RVP 6)	May	56.81	45.06	68.55	43.84	2.7449	N/A	N/A	69.0000			92.00	Option 4: RVP=6, ASTM Slope=3
Gasoline (RVP 6)	Jun	61.81	49.29	74.32	43.84	3.0465	N/A	N/A	69.0000			92.00	Option 4: RVP=6, ASTM Slope=3
Gasoline (RVP 6)	Jul	64.71	51.53	77.88	43.84	3.2334	N/A	N/A	69.0000			92.00	Option 4: RVP=6, ASTM Slope=3
Gasoline (RVP 6)	Aug	62.42	50.31	74.54	43.84	3.0855	N/A	N/A	69.0000			92.00	Option 4: RVP=6, ASTM Slope=3
Gasoline (RVP 6)	Sep	55.34	45.27	65.40	43.84	2.6611	N/A	N/A	69.0000			92.00	Option 4: RVP=6, ASTM Slope=3
Gasoline (RVP 6)	Oct	48.45	40.33	56.58	43.84	2.2958	N/A	N/A	69.0000			92.00	Option 4: RVP=6, ASTM Slope=3
Gasoline (RVP 6)	Nov	39.43	33.50	45.36	43.84	1.8800	N/A	N/A	69.0000			92.00	Option 4: RVP=6, ASTM Slope=3
Gasoline (RVP 6)	Dec	32.50	27.06	37.95	43.84	1.6048	N/A	N/A	69.0000			92.00	Option 4: RVP=6, ASTM Slope=3

TANKS 4.0.9d
Emissions Report - Detail Format
Detail Calculations (AP-42)

203-T-0005 - Internal Floating Roof Tank
Belfield, North Dakota

Month:	January	February	March	April	May	June	July	August	September	October	November	December
Rim Seal Losses (lb):	3.2120	3.5512	4.2211	5.1115	5.9891	6.7339	7.2056	6.8316	5.7857	4.9159	3.9581	3.3418
Seal Factor A (lb-mole/ft-yr):	0.3000	0.3000	0.3000	0.3000	0.3000	0.3000	0.3000	0.3000	0.3000	0.3000	0.3000	0.3000
Seal Factor B (lb-mole/ft-yr (mph)^n):	0.6000	0.6000	0.6000	0.6000	0.6000	0.6000	0.6000	0.6000	0.6000	0.6000	0.6000	0.6000
Value of Vapor Pressure Function:	0.0296	0.0327	0.0388	0.0470	0.0551	0.0620	0.0663	0.0629	0.0532	0.0452	0.0364	0.0308
Vapor Pressure at Daily Average Liquid Surface Temperature (psia):	1.5461	1.6990	1.9957	2.3789	2.7449	3.0465	3.2334	3.0855	2.6611	2.2958	1.8800	1.6048
Tank Diameter (ft):	63.0000	63.0000	63.0000	63.0000	63.0000	63.0000	63.0000	63.0000	63.0000	63.0000	63.0000	63.0000
Vapor Molecular Weight (lb/lb-mole):	69.0000	69.0000	69.0000	69.0000	69.0000	69.0000	69.0000	69.0000	69.0000	69.0000	69.0000	69.0000
Product Factor:	1.0000	1.0000	1.0000	1.0000	1.0000	1.0000	1.0000	1.0000	1.0000	1.0000	1.0000	1.0000
Withdrawal Losses (lb):	9.3472	9.3472	9.3472	9.3472	9.3472	9.3472	9.3472	9.3472	9.3472	9.3472	9.3472	9.3472
Number of Columns:	0.0000	0.0000	0.0000	0.0000	0.0000	0.0000	0.0000	0.0000	0.0000	0.0000	0.0000	0.0000
Effective Column Diameter (ft):	0.0000	0.0000	0.0000	0.0000	0.0000	0.0000	0.0000	0.0000	0.0000	0.0000	0.0000	0.0000
Net Throughput (gal/mo.):	3,122,333.7500	3,122,333.7500	3,122,333.7500	3,122,333.7500	3,122,333.7500	3,122,333.7500	3,122,333.7500	3,122,333.7500	3,122,333.7500	3,122,333.7500	3,122,333.7500	3,122,333.7500
Shell Clingage Factor (bbl/1000 sqft):	0.0015	0.0015	0.0015	0.0015	0.0015	0.0015	0.0015	0.0015	0.0015	0.0015	0.0015	0.0015
Average Organic Liquid Density (lb/gal):	5.6000	5.6000	5.6000	5.6000	5.6000	5.6000	5.6000	5.6000	5.6000	5.6000	5.6000	5.6000
Tank Diameter (ft):	63.0000	63.0000	63.0000	63.0000	63.0000	63.0000	63.0000	63.0000	63.0000	63.0000	63.0000	63.0000
Deck Fitting Losses (lb):	9.1092	10.0710	11.9711	14.4961	16.9850	19.0973	20.4350	19.3741	16.4082	13.9415	11.2250	9.4772
Value of Vapor Pressure Function:	0.0296	0.0327	0.0388	0.0470	0.0551	0.0620	0.0663	0.0629	0.0532	0.0452	0.0364	0.0308
Vapor Molecular Weight (lb/lb-mole):	69.0000	69.0000	69.0000	69.0000	69.0000	69.0000	69.0000	69.0000	69.0000	69.0000	69.0000	69.0000
Product Factor:	1.0000	1.0000	1.0000	1.0000	1.0000	1.0000	1.0000	1.0000	1.0000	1.0000	1.0000	1.0000
Tot. Roof Fitting Loss Fact.(lb-mole/yr):	53.6000	53.6000	53.6000	53.6000	53.6000	53.6000	53.6000	53.6000	53.6000	53.6000	53.6000	53.6000
Deck Seam Losses (lb):	0.0000	0.0000	0.0000	0.0000	0.0000	0.0000	0.0000	0.0000	0.0000	0.0000	0.0000	0.0000
Deck Seam Length (ft):	0.0000	0.0000	0.0000	0.0000	0.0000	0.0000	0.0000	0.0000	0.0000	0.0000	0.0000	0.0000
Deck Seam Loss per Unit Length Factor (lb-mole/ft-yr):	0.0000	0.0000	0.0000	0.0000	0.0000	0.0000	0.0000	0.0000	0.0000	0.0000	0.0000	0.0000
Deck Seam Length Factor(ft/sqft):	0.0000	0.0000	0.0000	0.0000	0.0000	0.0000	0.0000	0.0000	0.0000	0.0000	0.0000	0.0000
Tank Diameter (ft):	63.0000	63.0000	63.0000	63.0000	63.0000	63.0000	63.0000	63.0000	63.0000	63.0000	63.0000	63.0000
Vapor Molecular Weight (lb/lb-mole):	69.0000	69.0000	69.0000	69.0000	69.0000	69.0000	69.0000	69.0000	69.0000	69.0000	69.0000	69.0000
Product Factor:	1.0000	1.0000	1.0000	1.0000	1.0000	1.0000	1.0000	1.0000	1.0000	1.0000	1.0000	1.0000
Total Losses (lb):	21.6684	22.9694	25.5394	28.9548	32.3212	35.1784	36.9878	35.5529	31.5410	28.2046	24.5302	22.1662

Roof Fitting/Status	Quantity	Roof Fitting Loss Factors KFa(lb-mole/yr)	KFb(lb-mole/(yr mph^n))	m	Losses(lb)
Access Hatch (24-in. Diam.)/Bolted Cover, Gasketed	1	1.60	0.00	0.00	5.1610
Automatic Gauge Float Well/Bolted Cover, Gasketed	1	2.80	0.00	0.00	9.0318
Roof Leg or Hanger Well/Fixed	39	0.00	0.00	0.00	0.0000
Sample Pipe or Well (24-in. Diam.)/Slotted Pipe-Sliding Cover, Gask.	1	43.00	0.00	0.00	138.7026
Vacuum Breaker (10-in. Diam.)/Weighted Mech. Actuation, Gask.	1	6.20	1.20	0.94	19.9990

TANKS 4.0.9d
Emissions Report - Detail Format
Individual Tank Emission Totals

Emissions Report for: January, February, March, April, May, June, July, August, September, October, November, December

203-T-0005 - Internal Floating Roof Tank
Belfield, North Dakota

	Losses(lbs)				
Components	Rim Seal Loss	Withdrawl Loss	Deck Fitting Loss	Deck Seam Loss	Total Emissions
Gasoline (RVP 6)	60.86	112.17	172.59	0.00	345.61

TANKS 4.0.9d
Emissions Report - Detail Format
Tank Indentification and Physical Characteristics

Identification

User Identification:	203-T-0006
City:	Belfield
State:	North Dakota
Company:	Meridian
Type of Tank:	Internal Floating Roof Tank
Description:	Reformate

Tank Dimensions

Diameter (ft):	63.00
Volume (gallons):	1,399,104.00
Turnovers:	46.90
Self Supp. Roof? (y/n):	Y
No. of Columns:	0.00
Eff. Col. Diam. (ft):	0.00

Paint Characteristics

Internal Shell Condition:	Light Rust
Shell Color/Shade:	Gray/Light
Shell Condition	Good
Roof Color/Shade:	Gray/Light
Roof Condition:	Good

Rim-Seal System

Primary Seal:	Liquid-mounted
Secondary Seal	Rim-mounted

Deck Characteristics

Deck Fitting Category:	Detail
Deck Type:	Welded

Deck Fitting/Status	Quantity
Access Hatch (24-in. Diam.)/Bolted Cover, Gasketed	1
Automatic Gauge Float Well/Bolted Cover, Gasketed	1
Roof Leg or Hanger Well/Fixed	18
Sample Pipe or Well (24-in. Diam.)/Slotted Pipe-Sliding Cover, Gask.	1
Vacuum Breaker (10-in. Diam.)/Weighted Mech. Actuation, Gask.	1

Meterological Data used in Emissions Calculations: Bismarck, North Dakota (Avg Atmospheric Pressure = 13.86 psia)

TANKS 4.0.9d
Emissions Report - Detail Format
Liquid Contents of Storage Tank

203-T-0006 - Internal Floating Roof Tank
Belfield, North Dakota

Mixture/Component	Month	Daily Liquid Surf. Temperature (deg F) Avg.	Min.	Max.	Liquid Bulk Temp (deg F)	Vapor Pressure (psia) Avg.	Min.	Max.	Vapor Mol. Weight.	Liquid Mass Fract.	Vapor Mass Fract.	Mol. Weight	Basis for Vapor Pressure Calculations
Gasoline (RVP 7.8)	Jan	30.90	24.94	36.87	43.84	2.1175	N/A	N/A	68.0000			92.00	Option 4: RVP=7.8, ASTM Slope=3
Gasoline (RVP 7.8)	Feb	34.98	28.04	41.91	43.84	2.3194	N/A	N/A	68.0000			92.00	Option 4: RVP=7.8, ASTM Slope=3
Gasoline (RVP 7.8)	Mar	42.09	33.80	50.39	43.84	2.7093	N/A	N/A	68.0000			92.00	Option 4: RVP=7.8, ASTM Slope=3
Gasoline (RVP 7.8)	Apr	50.10	39.90	60.29	43.84	3.2102	N/A	N/A	68.0000			92.00	Option 4: RVP=7.8, ASTM Slope=3
Gasoline (RVP 7.8)	May	56.81	45.06	68.55	43.84	3.6857	N/A	N/A	68.0000			92.00	Option 4: RVP=7.8, ASTM Slope=3
Gasoline (RVP 7.8)	Jun	61.81	49.29	74.32	43.84	4.0761	N/A	N/A	68.0000			92.00	Option 4: RVP=7.8, ASTM Slope=3
Gasoline (RVP 7.8)	Jul	64.71	51.53	77.88	43.84	4.3173	N/A	N/A	68.0000			92.00	Option 4: RVP=7.8, ASTM Slope=3
Gasoline (RVP 7.8)	Aug	62.42	50.31	74.54	43.84	4.1264	N/A	N/A	68.0000			92.00	Option 4: RVP=7.8, ASTM Slope=3
Gasoline (RVP 7.8)	Sep	55.34	45.27	65.40	43.84	3.5770	N/A	N/A	68.0000			92.00	Option 4: RVP=7.8, ASTM Slope=3
Gasoline (RVP 7.8)	Oct	48.45	40.33	56.58	43.84	3.1018	N/A	N/A	68.0000			92.00	Option 4: RVP=7.8, ASTM Slope=3
Gasoline (RVP 7.8)	Nov	39.43	33.50	45.36	43.84	2.5576	N/A	N/A	68.0000			92.00	Option 4: RVP=7.8, ASTM Slope=3
Gasoline (RVP 7.8)	Dec	32.50	27.06	37.95	43.84	2.1952	N/A	N/A	68.0000			92.00	Option 4: RVP=7.8, ASTM Slope=3

TANKS 4.0.9d
Emissions Report - Detail Format
Detail Calculations (AP-42)

203-T-0006 - Internal Floating Roof Tank
Belfield, North Dakota

Month:	January	February	March	April	May	June	July	August	September	October	November	December
Rim Seal Losses (lb):	4.4360	4.8994	5.8171	7.0428	8.2595	9.2997	9.9625	9.4366	7.9767	6.7729	5.4563	4.6132
Seal Factor A (lb-mole/ft-yr):	0.3000	0.3000	0.3000	0.3000	0.3000	0.3000	0.3000	0.3000	0.3000	0.3000	0.3000	0.3000
Seal Factor B (lb-mole/ft-yr (mph)^n):	0.6000	0.6000	0.6000	0.6000	0.6000	0.6000	0.6000	0.6000	0.6000	0.6000	0.6000	0.6000
Value of Vapor Pressure Function:	0.0414	0.0457	0.0543	0.0658	0.0771	0.0868	0.0930	0.0881	0.0745	0.0632	0.0509	0.0431
Vapor Pressure at Daily Average Liquid Surface Temperature (psia):	2.1175	2.3194	2.7093	3.2102	3.6857	4.0761	4.3173	4.1264	3.5770	3.1018	2.5576	2.1952
Tank Diameter (ft):	63.0000	63.0000	63.0000	63.0000	63.0000	63.0000	63.0000	63.0000	63.0000	63.0000	63.0000	63.0000
Vapor Molecular Weight (lb/lb-mole):	68.0000	68.0000	68.0000	68.0000	68.0000	68.0000	68.0000	68.0000	68.0000	68.0000	68.0000	68.0000
Product Factor:	1.0000	1.0000	1.0000	1.0000	1.0000	1.0000	1.0000	1.0000	1.0000	1.0000	1.0000	1.0000
Withdrawal Losses (lb):	16.3698	16.3698	16.3698	16.3698	16.3698	16.3698	16.3698	16.3698	16.3698	16.3698	16.3698	16.3698
Number of Columns:	0.0000	0.0000	0.0000	0.0000	0.0000	0.0000	0.0000	0.0000	0.0000	0.0000	0.0000	0.0000
Effective Column Diameter (ft):	0.0000	0.0000	0.0000	0.0000	0.0000	0.0000	0.0000	0.0000	0.0000	0.0000	0.0000	0.0000
Net Throughput (gal/mo.):	5,468,164.8000	5,468,164.8000	5,468,164.8000	5,468,164.8000	5,468,164.8000	5,468,164.8000	5,468,164.8000	5,468,164.8000	5,468,164.8000	5,468,164.8000	5,468,164.8000	5,468,164.8000
Shell Clingage Factor (bbl/1000 sqft):	0.0015	0.0015	0.0015	0.0015	0.0015	0.0015	0.0015	0.0015	0.0015	0.0015	0.0015	0.0015
Average Organic Liquid Density (lb/gal):	5.6000	5.6000	5.6000	5.6000	5.6000	5.6000	5.6000	5.6000	5.6000	5.6000	5.6000	5.6000
Tank Diameter (ft):	63.0000	63.0000	63.0000	63.0000	63.0000	63.0000	63.0000	63.0000	63.0000	63.0000	63.0000	63.0000
Deck Fitting Losses (lb):	12.5803	13.8945	16.4971	19.9733	23.4237	26.3738	28.2536	26.7621	22.6217	19.2078	15.4740	13.0829
Value of Vapor Pressure Function:	0.0414	0.0457	0.0543	0.0658	0.0771	0.0868	0.0930	0.0881	0.0745	0.0632	0.0509	0.0431
Vapor Molecular Weight (lb/lb-mole):	68.0000	68.0000	68.0000	68.0000	68.0000	68.0000	68.0000	68.0000	68.0000	68.0000	68.0000	68.0000
Product Factor:	1.0000	1.0000	1.0000	1.0000	1.0000	1.0000	1.0000	1.0000	1.0000	1.0000	1.0000	1.0000
Tot. Roof Fitting Loss Fact.(lb-mole/yr):	53.6000	53.6000	53.6000	53.6000	53.6000	53.6000	53.6000	53.6000	53.6000	53.6000	53.6000	53.6000
Deck Seam Losses (lb):	0.0000	0.0000	0.0000	0.0000	0.0000	0.0000	0.0000	0.0000	0.0000	0.0000	0.0000	0.0000
Deck Seam Length (ft):	0.0000	0.0000	0.0000	0.0000	0.0000	0.0000	0.0000	0.0000	0.0000	0.0000	0.0000	0.0000
Deck Seam Loss per Unit Length Factor (lb-mole/ft-yr):	0.0000	0.0000	0.0000	0.0000	0.0000	0.0000	0.0000	0.0000	0.0000	0.0000	0.0000	0.0000
Deck Seam Length Factor(ft/sqft):	0.0000	0.0000	0.0000	0.0000	0.0000	0.0000	0.0000	0.0000	0.0000	0.0000	0.0000	0.0000
Tank Diameter (ft):	63.0000	63.0000	63.0000	63.0000	63.0000	63.0000	63.0000	63.0000	63.0000	63.0000	63.0000	63.0000
Vapor Molecular Weight (lb/lb-mole):	68.0000	68.0000	68.0000	68.0000	68.0000	68.0000	68.0000	68.0000	68.0000	68.0000	68.0000	68.0000
Product Factor:	1.0000	1.0000	1.0000	1.0000	1.0000	1.0000	1.0000	1.0000	1.0000	1.0000	1.0000	1.0000
Total Losses (lb):	33.3860	35.1636	38.6840	43.3859	48.0529	52.0433	54.5859	52.5685	46.9681	42.3505	37.3001	34.0658

Roof Fitting/Status	Quantity	Roof Fitting Loss Factors KFa(lb-mole/yr)	KFb(lb-mole/(yr mph^n))	m	Losses(lb)
Access Hatch (24-in. Diam.)/Bolted Cover, Gasketed	1	1.60	0.00	0.00	7.1214
Automatic Gauge Float Well/Bolted Cover, Gasketed	1	2.80	0.00	0.00	12.4624
Roof Leg or Hanger Well/Fixed	18	0.00	0.00	0.00	0.0000
Sample Pipe or Well (24-in. Diam.)/Slotted Pipe-Sliding Cover, Gask.	1	43.00	0.00	0.00	191.3864
Vacuum Breaker (10-in. Diam.)/Weighted Mech. Actuation, Gask.	1	6.20	1.20	0.94	27.5952

TANKS 4.0.9d
Emissions Report - Detail Format
Individual Tank Emission Totals

Emissions Report for: January, February, March, April, May, June, July, August, September, October, November, December

203-T-0006 - Internal Floating Roof Tank
Belfield, North Dakota

	Losses(lbs)				
Components	Rim Seal Loss	Withdrawl Loss	Deck Fitting Loss	Deck Seam Loss	Total Emissions
Gasoline (RVP 7.8)	83.97	196.44	238.14	0.00	518.55

TANKS 4.0.9d
Emissions Report - Detail Format
Tank Indentification and Physical Characteristics

Identification

User Identification:	203-T-0008
City:	Belfield
State:	North Dakota
Company:	Meridian
Type of Tank:	Internal Floating Roof Tank
Description:	Gasoline (RVP 13-15)

Tank Dimensions

Diameter (ft):	88.00
Volume (gallons):	2,729,832.00
Turnovers:	55.73
Self Supp. Roof? (y/n):	Y
No. of Columns:	0.00
Eff. Col. Diam. (ft):	0.00

Paint Characteristics

Internal Shell Condition:	Light Rust
Shell Color/Shade:	Gray/Light
Shell Condition	Good
Roof Color/Shade:	Gray/Light
Roof Condition:	Good

Rim-Seal System

Primary Seal:	Liquid-mounted
Secondary Seal	Rim-mounted

Deck Characteristics

Deck Fitting Category:	Detail
Deck Type:	Welded

Deck Fitting/Status	Quantity
Access Hatch (24-in. Diam.)/Bolted Cover, Gasketed	1
Automatic Gauge Float Well/Bolted Cover, Gasketed	1
Roof Leg or Hanger Well/Fixed	27
Sample Pipe or Well (24-in. Diam.)/Slotted Pipe-Sliding Cover, Gask.	1
Vacuum Breaker (10-in. Diam.)/Weighted Mech. Actuation, Gask.	1

Meterological Data used in Emissions Calculations: Bismarck, North Dakota (Avg Atmospheric Pressure = 13.86 psia)

TANKS 4.0.9d
Emissions Report - Detail Format
Liquid Contents of Storage Tank

203-T-0008 - Internal Floating Roof Tank
Belfield, North Dakota

Mixture/Component	Month	Daily Liquid Surf. Temperature (deg F) Avg.	Min.	Max.	Liquid Bulk Temp (deg F)	Vapor Pressure (psia) Avg.	Min.	Max.	Vapor Mol. Weight.	Liquid Mass Fract.	Vapor Mass Fract.	Mol. Weight	Basis for Vapor Pressure Calculations
Gasoline (RVP 15.0)	Jan	30.90	24.94	36.87	43.84	4.6376	N/A	N/A	60.0000			92.00	Option 4: RVP=15, ASTM Slope=3
Gasoline (RVP 15.0)	Feb	34.98	28.04	41.91	43.84	5.0388	N/A	N/A	60.0000			92.00	Option 4: RVP=15, ASTM Slope=3
Gasoline (RVP 15.0)	Mar	42.09	33.80	50.39	43.84	5.8049	N/A	N/A	60.0000			92.00	Option 4: RVP=15, ASTM Slope=3
Gasoline (RVP 15.0)	Apr	50.10	39.90	60.29	43.84	6.7748	N/A	N/A	60.0000			92.00	Option 4: RVP=15, ASTM Slope=3
Gasoline (RVP 13)	May	56.81	45.06	68.55	43.84	6.5424	N/A	N/A	62.0000			92.00	Option 4: RVP=13, ASTM Slope=3
Gasoline (RVP 13)	Jun	61.81	49.29	74.32	43.84	7.1848	N/A	N/A	62.0000			92.00	Option 4: RVP=13, ASTM Slope=3
Gasoline (RVP 13)	Jul	64.71	51.53	77.88	43.84	7.5796	N/A	N/A	62.0000			92.00	Option 4: RVP=13, ASTM Slope=3
Gasoline (RVP 13)	Aug	62.42	50.31	74.54	43.84	7.2672	N/A	N/A	62.0000			92.00	Option 4: RVP=13, ASTM Slope=3
Gasoline (RVP 13)	Sep	55.34	45.27	65.40	43.84	6.3627	N/A	N/A	62.0000			92.00	Option 4: RVP=13, ASTM Slope=3
Gasoline (RVP 15.0)	Oct	48.45	40.33	56.58	43.84	6.5661	N/A	N/A	60.0000			92.00	Option 4: RVP=15, ASTM Slope=3
Gasoline (RVP 15.0)	Nov	39.43	33.50	45.36	43.84	5.5080	N/A	N/A	60.0000			92.00	Option 4: RVP=15, ASTM Slope=3
Gasoline (RVP 15.0)	Dec	32.50	27.06	37.95	43.84	4.7922	N/A	N/A	60.0000			92.00	Option 4: RVP=15, ASTM Slope=3

TANKS 4.0.9d
Emissions Report - Detail Format
Detail Calculations (AP-42)

203-T-0008 - Internal Floating Roof Tank
Belfield, North Dakota

Month:	January	February	March	April	May	June	July	August	September	October	November	December
Rim Seal Losses (lb):	13.3948	14.8452	17.7966	21.9332	21.5928	24.6351	26.6399	25.0448	20.7858	21.0009	16.6229	13.9465
Seal Factor A (lb-mole/ft-yr):	0.3000	0.3000	0.3000	0.3000	0.3000	0.3000	0.3000	0.3000	0.3000	0.3000	0.3000	0.3000
Seal Factor B (lb-mole/ft-yr (mph)^n):	0.6000	0.6000	0.6000	0.6000	0.6000	0.6000	0.6000	0.6000	0.6000	0.6000	0.6000	0.6000
Value of Vapor Pressure Function:	0.1015	0.1125	0.1348	0.1662	0.1583	0.1806	0.1953	0.1836	0.1524	0.1591	0.1259	0.1057
Vapor Pressure at Daily Average Liquid Surface Temperature (psia):	4.6376	5.0388	5.8049	6.7748	6.5424	7.1848	7.5796	7.2672	6.3627	6.5661	5.5080	4.7922
Tank Diameter (ft):	88.0000	88.0000	88.0000	88.0000	88.0000	88.0000	88.0000	88.0000	88.0000	88.0000	88.0000	88.0000
Vapor Molecular Weight (lb/lb-mole):	60.0000	60.0000	60.0000	60.0000	62.0000	62.0000	62.0000	62.0000	62.0000	60.0000	60.0000	60.0000
Product Factor:	1.0000	1.0000	1.0000	1.0000	1.0000	1.0000	1.0000	1.0000	1.0000	1.0000	1.0000	1.0000
Withdrawal Losses (lb):	27.1708	27.1708	27.1708	27.1708	27.1708	27.1708	27.1708	27.1708	27.1708	27.1708	27.1708	27.1708
Number of Columns:	0.0000	0.0000	0.0000	0.0000	0.0000	0.0000	0.0000	0.0000	0.0000	0.0000	0.0000	0.0000
Effective Column Diameter (ft):	0.0000	0.0000	0.0000	0.0000	0.0000	0.0000	0.0000	0.0000	0.0000	0.0000	0.0000	0.0000
Net Throughput (gal/mo.):	12,677,794.7500	12,677,794.7500	12,677,794.7500	12,677,794.7500	12,677,794.7500	12,677,794.7500	12,677,794.7500	12,677,794.7500	12,677,794.7500	12,677,794.7500	12,677,794.7500	12,677,794.7500
Shell Clingage Factor (bbl/1000 sqft):	0.0015	0.0015	0.0015	0.0015	0.0015	0.0015	0.0015	0.0015	0.0015	0.0015	0.0015	0.0015
Average Organic Liquid Density (lb/gal):	5.6000	5.6000	5.6000	5.6000	5.6000	5.6000	5.6000	5.6000	5.6000	5.6000	5.6000	5.6000
Tank Diameter (ft):	88.0000	88.0000	88.0000	88.0000	88.0000	88.0000	88.0000	88.0000	88.0000	88.0000	88.0000	88.0000
Deck Fitting Losses (lb):	27.1954	30.1402	36.1326	44.5310	43.8400	50.0168	54.0871	50.8485	42.2015	42.6382	33.7496	28.3157
Value of Vapor Pressure Function:	0.1015	0.1125	0.1348	0.1662	0.1583	0.1806	0.1953	0.1836	0.1524	0.1591	0.1259	0.1057
Vapor Molecular Weight (lb/lb-mole):	60.0000	60.0000	60.0000	60.0000	62.0000	62.0000	62.0000	62.0000	62.0000	60.0000	60.0000	60.0000
Product Factor:	1.0000	1.0000	1.0000	1.0000	1.0000	1.0000	1.0000	1.0000	1.0000	1.0000	1.0000	1.0000
Tot. Roof Fitting Loss Fact.(lb-mole/yr):	53.6000	53.6000	53.6000	53.6000	53.6000	53.6000	53.6000	53.6000	53.6000	53.6000	53.6000	53.6000
Deck Seam Losses (lb):	0.0000	0.0000	0.0000	0.0000	0.0000	0.0000	0.0000	0.0000	0.0000	0.0000	0.0000	0.0000
Deck Seam Length (ft):	0.0000	0.0000	0.0000	0.0000	0.0000	0.0000	0.0000	0.0000	0.0000	0.0000	0.0000	0.0000
Deck Seam Loss per Unit Length Factor (lb-mole/ft-yr):	0.0000	0.0000	0.0000	0.0000	0.0000	0.0000	0.0000	0.0000	0.0000	0.0000	0.0000	0.0000
Deck Seam Length Factor(ft/sqft):	0.0000	0.0000	0.0000	0.0000	0.0000	0.0000	0.0000	0.0000	0.0000	0.0000	0.0000	0.0000
Tank Diameter (ft):	88.0000	88.0000	88.0000	88.0000	88.0000	88.0000	88.0000	88.0000	88.0000	88.0000	88.0000	88.0000
Vapor Molecular Weight (lb/lb-mole):	60.0000	60.0000	60.0000	60.0000	62.0000	62.0000	62.0000	62.0000	62.0000	60.0000	60.0000	60.0000
Product Factor:	1.0000	1.0000	1.0000	1.0000	1.0000	1.0000	1.0000	1.0000	1.0000	1.0000	1.0000	1.0000
Total Losses (lb):	67.7610	72.1562	81.1000	93.6350	92.6036	101.8228	107.8979	103.0641	90.1582	90.8099	77.5434	69.4330

Roof Fitting/Status	Quantity	Roof Fitting Loss Factors KFa(lb-mole/yr)	KFb(lb-mole/(yr mph^n))	m	Losses(lb)
Access Hatch (24-in. Diam.)/Bolted Cover, Gasketed	1	1.60	0.00	0.00	14.4595
Automatic Gauge Float Well/Bolted Cover, Gasketed	1	2.80	0.00	0.00	25.3042
Roof Leg or Hanger Well/Fixed	27	0.00	0.00	0.00	0.0000
Sample Pipe or Well (24-in. Diam.)/Slotted Pipe-Sliding Cover, Gask.	1	43.00	0.00	0.00	388.6003
Vacuum Breaker (10-in. Diam.)/Weighted Mech. Actuation, Gask.	1	6.20	1.20	0.94	56.0307

TANKS 4.0.9d
Emissions Report - Detail Format
Individual Tank Emission Totals

Emissions Report for: January, February, March, April, May, June, July, August, September, October, November, December

203-T-0008 - Internal Floating Roof Tank
Belfield, North Dakota

	Losses(lbs)				
Components	Rim Seal Loss	Withdrawl Loss	Deck Fitting Loss	Deck Seam Loss	Total Emissions
Gasoline (RVP 15.0)	119.54	190.20	242.70	0.00	552.44
Gasoline (RVP 13)	118.70	135.85	240.99	0.00	495.55

TANKS 4.0.9d
Emissions Report - Detail Format
Tank Indentification and Physical Characteristics

Identification

User Identification:	203-T-0011
City:	Belfield
State:	North Dakota
Company:	Meridian
Type of Tank:	Internal Floating Roof Tank
Description:	Jet Fuel

Tank Dimensions

Diameter (ft):	63.00
Volume (gallons):	1,399,104.00
Turnovers:	23.28
Self Supp. Roof? (y/n):	Y
No. of Columns:	0.00
Eff. Col. Diam. (ft):	0.00

Paint Characteristics

Internal Shell Condition:	Light Rust
Shell Color/Shade:	Gray/Light
Shell Condition	Good
Roof Color/Shade:	Gray/Light
Roof Condition:	Good

Rim-Seal System

Primary Seal:	Liquid-mounted
Secondary Seal	Rim-mounted

Deck Characteristics

Deck Fitting Category:	Detail
Deck Type:	Welded

Deck Fitting/Status	Quantity
Access Hatch (24-in. Diam.)/Bolted Cover, Gasketed	1
Automatic Gauge Float Well/Bolted Cover, Gasketed	1
Roof Leg or Hanger Well/Fixed	18
Sample Pipe or Well (24-in. Diam.)/Slotted Pipe-Sliding Cover, Gask.	1
Vacuum Breaker (10-in. Diam.)/Weighted Mech. Actuation, Gask.	1

Meterological Data used in Emissions Calculations: Bismarck, North Dakota (Avg Atmospheric Pressure = 13.86 psia)

TANKS 4.0.9d
Emissions Report - Detail Format
Liquid Contents of Storage Tank

203-T-0011 - Internal Floating Roof Tank
Belfield, North Dakota

Mixture/Component	Month	Daily Liquid Surf. Temperature (deg F) Avg.	Min.	Max.	Liquid Bulk Temp (deg F)	Vapor Pressure (psia) Avg.	Min.	Max.	Vapor Mol. Weight.	Liquid Mass Fract.	Vapor Mass Fract.	Mol. Weight	Basis for Vapor Pressure Calculations
Jet naphtha (JP-4)	Jan	30.90	24.94	36.87	43.84	0.8000	N/A	N/A	80.0000			120.00	Option 1: VP40 = .8
Jet naphtha (JP-4)	Feb	34.98	28.04	41.91	43.84	0.8000	N/A	N/A	80.0000			120.00	Option 1: VP40 = .8
Jet naphtha (JP-4)	Mar	42.09	33.80	50.39	43.84	0.8418	N/A	N/A	80.0000			120.00	Option 1: VP40 = .8 VP50 = 1
Jet naphtha (JP-4)	Apr	50.10	39.90	60.29	43.84	1.0029	N/A	N/A	80.0000			120.00	Option 1: VP50 = 1 VP60 = 1.3
Jet naphtha (JP-4)	May	56.81	45.06	68.55	43.84	1.2042	N/A	N/A	80.0000			120.00	Option 1: VP50 = 1 VP60 = 1.3
Jet naphtha (JP-4)	Jun	61.81	49.29	74.32	43.84	1.3542	N/A	N/A	80.0000			120.00	Option 1: VP60 = 1.3 VP70 = 1.6
Jet naphtha (JP-4)	Jul	64.71	51.53	77.88	43.84	1.4412	N/A	N/A	80.0000			120.00	Option 1: VP60 = 1.3 VP70 = 1.6
Jet naphtha (JP-4)	Aug	62.42	50.31	74.54	43.84	1.3727	N/A	N/A	80.0000			120.00	Option 1: VP60 = 1.3 VP70 = 1.6
Jet naphtha (JP-4)	Sep	55.34	45.27	65.40	43.84	1.1601	N/A	N/A	80.0000			120.00	Option 1: VP50 = 1 VP60 = 1.3
Jet naphtha (JP-4)	Oct	48.45	40.33	56.58	43.84	0.9691	N/A	N/A	80.0000			120.00	Option 1: VP40 = .8 VP50 = 1
Jet naphtha (JP-4)	Nov	39.43	33.50	45.36	43.84	0.8000	N/A	N/A	80.0000			120.00	Option 1: VP40 = .8
Jet naphtha (JP-4)	Dec	32.50	27.06	37.95	43.84	0.8000	N/A	N/A	80.0000			120.00	Option 1: VP40 = .8

TANKS 4.0.9d
Emissions Report - Detail Format
Detail Calculations (AP-42)

203-T-0011 - Internal Floating Roof Tank
Belfield, North Dakota

Month:	January	February	March	April	May	June	July	August	September	October	November	December
Rim Seal Losses (lb):	1.8723	1.8723	1.9734	2.3653	2.8621	3.2375	3.4572	3.2840	2.7527	2.2827	1.8723	1.8723
Seal Factor A (lb-mole/ft-yr):	0.3000	0.3000	0.3000	0.3000	0.3000	0.3000	0.3000	0.3000	0.3000	0.3000	0.3000	0.3000
Seal Factor B (lb-mole/ft-yr (mph)^n):	0.6000	0.6000	0.6000	0.6000	0.6000	0.6000	0.6000	0.6000	0.6000	0.6000	0.6000	0.6000
Value of Vapor Pressure Function:	0.0149	0.0149	0.0157	0.0188	0.0227	0.0257	0.0274	0.0261	0.0218	0.0181	0.0149	0.0149
Vapor Pressure at Daily Average Liquid Surface Temperature (psia):	0.8000	0.8000	0.8418	1.0029	1.2042	1.3542	1.4412	1.3727	1.1601	0.9691	0.8000	0.8000
Tank Diameter (ft):	63.0000	63.0000	63.0000	63.0000	63.0000	63.0000	63.0000	63.0000	63.0000	63.0000	63.0000	63.0000
Vapor Molecular Weight (lb/lb-mole):	80.0000	80.0000	80.0000	80.0000	80.0000	80.0000	80.0000	80.0000	80.0000	80.0000	80.0000	80.0000
Product Factor:	1.0000	1.0000	1.0000	1.0000	1.0000	1.0000	1.0000	1.0000	1.0000	1.0000	1.0000	1.0000
Withdrawal Losses (lb):	9.2863	9.2863	9.2863	9.2863	9.2863	9.2863	9.2863	9.2863	9.2863	9.2863	9.2863	9.2863
Number of Columns:	0.0000	0.0000	0.0000	0.0000	0.0000	0.0000	0.0000	0.0000	0.0000	0.0000	0.0000	0.0000
Effective Column Diameter (ft):	0.0000	0.0000	0.0000	0.0000	0.0000	0.0000	0.0000	0.0000	0.0000	0.0000	0.0000	0.0000
Net Throughput (gal/mo.):	2,714,261.7500	2,714,261.7500	2,714,261.7500	2,714,261.7500	2,714,261.7500	2,714,261.7500	2,714,261.7500	2,714,261.7500	2,714,261.7500	2,714,261.7500	2,714,261.7500	2,714,261.7500
Shell Clingage Factor (bbl/1000 sqft):	0.0015	0.0015	0.0015	0.0015	0.0015	0.0015	0.0015	0.0015	0.0015	0.0015	0.0015	0.0015
Average Organic Liquid Density (lb/gal):	6.4000	6.4000	6.4000	6.4000	6.4000	6.4000	6.4000	6.4000	6.4000	6.4000	6.4000	6.4000
Tank Diameter (ft):	63.0000	63.0000	63.0000	63.0000	63.0000	63.0000	63.0000	63.0000	63.0000	63.0000	63.0000	63.0000
Deck Fitting Losses (lb):	5.3099	5.3099	5.5965	6.7079	8.1167	9.1815	9.8046	9.3134	7.8065	6.4736	5.3099	5.3099
Value of Vapor Pressure Function:	0.0149	0.0149	0.0157	0.0188	0.0227	0.0257	0.0274	0.0261	0.0218	0.0181	0.0149	0.0149
Vapor Molecular Weight (lb/lb-mole):	80.0000	80.0000	80.0000	80.0000	80.0000	80.0000	80.0000	80.0000	80.0000	80.0000	80.0000	80.0000
Product Factor:	1.0000	1.0000	1.0000	1.0000	1.0000	1.0000	1.0000	1.0000	1.0000	1.0000	1.0000	1.0000
Tot. Roof Fitting Loss Fact.(lb-mole/yr):	53.6000	53.6000	53.6000	53.6000	53.6000	53.6000	53.6000	53.6000	53.6000	53.6000	53.6000	53.6000
Deck Seam Losses (lb):	0.0000	0.0000	0.0000	0.0000	0.0000	0.0000	0.0000	0.0000	0.0000	0.0000	0.0000	0.0000
Deck Seam Length (ft):	0.0000	0.0000	0.0000	0.0000	0.0000	0.0000	0.0000	0.0000	0.0000	0.0000	0.0000	0.0000
Deck Seam Loss per Unit Length Factor (lb-mole/ft-yr):	0.0000	0.0000	0.0000	0.0000	0.0000	0.0000	0.0000	0.0000	0.0000	0.0000	0.0000	0.0000
Deck Seam Length Factor(ft/sqft):	0.0000	0.0000	0.0000	0.0000	0.0000	0.0000	0.0000	0.0000	0.0000	0.0000	0.0000	0.0000
Tank Diameter (ft):	63.0000	63.0000	63.0000	63.0000	63.0000	63.0000	63.0000	63.0000	63.0000	63.0000	63.0000	63.0000
Vapor Molecular Weight (lb/lb-mole):	80.0000	80.0000	80.0000	80.0000	80.0000	80.0000	80.0000	80.0000	80.0000	80.0000	80.0000	80.0000
Product Factor:	1.0000	1.0000	1.0000	1.0000	1.0000	1.0000	1.0000	1.0000	1.0000	1.0000	1.0000	1.0000
Total Losses (lb):	16.4686	16.4686	16.8562	18.3595	20.2651	21.7053	22.5482	21.8838	19.8455	18.0426	16.4686	16.4686

Roof Fitting/Status	Quantity	Roof Fitting Loss Factors KFa(lb-mole/yr)	KFb(lb-mole/(yr mph^n))	m	Losses(lb)
Access Hatch (24-in. Diam.)/Bolted Cover, Gasketed	1	1.60	0.00	0.00	2.5188
Automatic Gauge Float Well/Bolted Cover, Gasketed	1	2.80	0.00	0.00	4.4078
Roof Leg or Hanger Well/Fixed	18	0.00	0.00	0.00	0.0000
Sample Pipe or Well (24-in. Diam.)/Slotted Pipe-Sliding Cover, Gask.	1	43.00	0.00	0.00	67.6919
Vacuum Breaker (10-in. Diam.)/Weighted Mech. Actuation, Gask.	1	6.20	1.20	0.94	9.7602

TANKS 4.0.9d
Emissions Report - Detail Format
Individual Tank Emission Totals

Emissions Report for: January, February, March, April, May, June, July, August, September, October, November, December

203-T-0011 - Internal Floating Roof Tank
Belfield, North Dakota

	Losses(lbs)				
Components	Rim Seal Loss	Withdrawl Loss	Deck Fitting Loss	Deck Seam Loss	Total Emissions
Jet naphtha (JP-4)	29.70	111.44	84.24	0.00	225.38

TANKS 4.0.9d
Emissions Report - Detail Format
Tank Indentification and Physical Characteristics

Identification

User Identification:	203-T-013
City:	Belfied
State:	North Dakota
Company:	Meridian
Type of Tank:	Vertical Fixed Roof Tank
Description:	Undesulfurized Diesel

Tank Dimensions

Shell Height (ft):	60.00
Diameter (ft):	63.00
Liquid Height (ft) :	50.00
Avg. Liquid Height (ft):	20.00
Volume (gallons):	1,165,934.57
Turnovers:	27.61
Net Throughput(gal/yr):	32,196,066.00
Is Tank Heated (y/n):	N

Paint Characteristics

Shell Color/Shade:	Gray/Light
Shell Condition	Good
Roof Color/Shade:	Gray/Light
Roof Condition:	Good

Roof Characteristics

Type:	Cone
Height (ft)	5.00
Slope (ft/ft) (Cone Roof)	0.16

Breather Vent Settings

Vacuum Settings (psig):	-0.03
Pressure Settings (psig)	0.03

Meterological Data used in Emissions Calculations: Bismarck, North Dakota (Avg Atmospheric Pressure = 13.86 psia)

TANKS 4.0.9d
Emissions Report - Detail Format
Liquid Contents of Storage Tank

203-T-013 - Vertical Fixed Roof Tank
Belfied, North Dakota

Mixture/Component	Month	Daily Liquid Surf. Temperature (deg F) Avg.	Min.	Max.	Liquid Bulk Temp (deg F)	Vapor Pressure (psia) Avg.	Min.	Max.	Vapor Mol. Weight.	Liquid Mass Fract.	Vapor Mass Fract.	Mol. Weight	Basis for Vapor Pressure Calculations
Distillate fuel oil no. 2	All	48.29	39.09	57.50	43.84	0.0043	0.0031	0.0060	130.0000			188.00	Option 1: VP40 = .0031 VP50 = .0045

TANKS 4.0.9d
Emissions Report - Detail Format
Detail Calculations (AP-42)

203-T-013 - Vertical Fixed Roof Tank
Belfied, North Dakota

Annual Emission Calcaulations	
Standing Losses (lb):	326.4459
Vapor Space Volume (cu ft):	129,885.2211
Vapor Density (lb/cu ft):	0.0001
Vapor Space Expansion Factor:	0.0684
Vented Vapor Saturation Factor:	0.9907
Tank Vapor Space Volume:	
Vapor Space Volume (cu ft):	129,885.2211
Tank Diameter (ft):	63.0000
Vapor Space Outage (ft):	41.6667
Tank Shell Height (ft):	60.0000
Average Liquid Height (ft):	20.0000
Roof Outage (ft):	1.6667
Roof Outage (Cone Roof)	
Roof Outage (ft):	1.6667
Roof Height (ft):	5.0000
Roof Slope (ft/ft):	0.1600
Shell Radius (ft):	31.5000
Vapor Density	
Vapor Density (lb/cu ft):	0.0001
Vapor Molecular Weight (lb/lb-mole):	130.0000
Vapor Pressure at Daily Average Liquid Surface Temperature (psia):	0.0043
Daily Avg. Liquid Surface Temp. (deg. R):	507.9647
Daily Average Ambient Temp. (deg. F):	41.5958
Ideal Gas Constant R (psia cuft / (lb-mol-deg R)):	10.731
Liquid Bulk Temperature (deg. R):	503.5058
Tank Paint Solar Absorptance (Shell):	0.5400
Tank Paint Solar Absorptance (Roof):	0.5400
Daily Total Solar Insulation Factor (Btu/sqft day):	1,276.2450
Vapor Space Expansion Factor	
Vapor Space Expansion Factor:	0.0684
Daily Vapor Temperature Range (deg. R):	36.8348
Daily Vapor Pressure Range (psia):	0.0029
Breather Vent Press. Setting Range(psia):	0.0600
Vapor Pressure at Daily Average Liquid Surface Temperature (psia):	0.0043
Vapor Pressure at Daily Minimum Liquid Surface Temperature (psia):	0.0031
Vapor Pressure at Daily Maximum Liquid Surface Temperature (psia):	0.0060
Daily Avg. Liquid Surface Temp. (deg R):	507.9647
Daily Min. Liquid Surface Temp. (deg R):	498.7560
Daily Max. Liquid Surface Temp. (deg R):	517.1734
Daily Ambient Temp. Range (deg. R):	24.3583
Vented Vapor Saturation Factor	
Vented Vapor Saturation Factor:	0.9907
Vapor Pressure at Daily Average Liquid: Surface Temperature (psia):	0.0043
Vapor Space Outage (ft):	41.6667

Working Losses (lb):	424.6534
Vapor Molecular Weight (lb/lb-mole):	130.0000
Vapor Pressure at Daily Average Liquid Surface Temperature (psia):	0.0043
Annual Net Throughput (gal/yr.):	32,196,066.0000
Annual Turnovers:	27.6140
Turnover Factor:	1.0000
Maximum Liquid Volume (gal):	1,165,934.5742
Maximum Liquid Height (ft):	50.0000
Tank Diameter (ft):	63.0000
Working Loss Product Factor:	1.0000

Total Losses (lb):	751.0993

TANKS 4.0.9d
Emissions Report - Detail Format
Individual Tank Emission Totals

Emissions Report for: Annual

203-T-013 - Vertical Fixed Roof Tank
Belfied, North Dakota

	Losses(lbs)		
Components	Working Loss	Breathing Loss	Total Emissions
Distillate fuel oil no. 2	424.65	326.45	751.10

TANKS 4.0.9d
Emissions Report - Detail Format
Tank Indentification and Physical Characteristics

Identification

User Identification:	203-T-0015
City:	Belfield
State:	North Dakota
Company:	Meridian
Type of Tank:	Vertical Fixed Roof Tank
Description:	Desulfurized Diesel

Tank Dimensions

Shell Height (ft):	60.00
Diameter (ft):	88.00
Liquid Height (ft) :	50.00
Avg. Liquid Height (ft):	48.00
Volume (gallons):	2,274,879.65
Turnovers:	56.44
Net Throughput(gal/yr):	128,404,080.00
Is Tank Heated (y/n):	N

Paint Characteristics

Shell Color/Shade:	Gray/Light
Shell Condition	Good
Roof Color/Shade:	Gray/Light
Roof Condition:	Good

Roof Characteristics

Type:	Cone
Height (ft)	5.00
Slope (ft/ft) (Cone Roof)	0.15

Breather Vent Settings

Vacuum Settings (psig):	-0.03
Pressure Settings (psig)	0.03

Meterological Data used in Emissions Calculations: Bismarck, North Dakota (Avg Atmospheric Pressure = 13.86 psia)

TANKS 4.0.9d
Emissions Report - Detail Format
Liquid Contents of Storage Tank

203-T-0015 - Vertical Fixed Roof Tank
Belfield, North Dakota

Mixture/Component	Month	Daily Liquid Surf. Temperature (deg F) Avg.	Min.	Max.	Liquid Bulk Temp (deg F)	Vapor Pressure (psia) Avg.	Min.	Max.	Vapor Mol. Weight.	Liquid Mass Fract.	Vapor Mass Fract.	Mol. Weight	Basis for Vapor Pressure Calculations
Distillate fuel oil no. 2	All	48.29	39.09	57.50	43.84	0.0043	0.0031	0.0060	130.0000			188.00	Option 1: VP40 = .0031 VP50 = .0045

TANKS 4.0.9d
Emissions Report - Detail Format
Detail Calculations (AP-42)

203-T-0015 - Vertical Fixed Roof Tank
Belfield, North Dakota

Annual Emission Calcaulations	
Standing Losses (lb):	210.2319
Vapor Space Volume (cu ft):	83,122.3527
Vapor Density (lb/cu ft):	0.0001
Vapor Space Expansion Factor:	0.0684
Vented Vapor Saturation Factor:	0.9969
Tank Vapor Space Volume:	
Vapor Space Volume (cu ft):	83,122.3527
Tank Diameter (ft):	88.0000
Vapor Space Outage (ft):	13.6667
Tank Shell Height (ft):	60.0000
Average Liquid Height (ft):	48.0000
Roof Outage (ft):	1.6667
Roof Outage (Cone Roof)	
Roof Outage (ft):	1.6667
Roof Height (ft):	5.0000
Roof Slope (ft/ft):	0.1500
Shell Radius (ft):	44.0000
Vapor Density	
Vapor Density (lb/cu ft):	0.0001
Vapor Molecular Weight (lb/lb-mole):	130.0000
Vapor Pressure at Daily Average Liquid Surface Temperature (psia):	0.0043
Daily Avg. Liquid Surface Temp. (deg. R):	507.9647
Daily Average Ambient Temp. (deg. F):	41.5958
Ideal Gas Constant R (psia cuft / (lb-mol-deg R)):	10.731
Liquid Bulk Temperature (deg. R):	503.5058
Tank Paint Solar Absorptance (Shell):	0.5400
Tank Paint Solar Absorptance (Roof):	0.5400
Daily Total Solar Insulation Factor (Btu/sqft day):	1,276.2450
Vapor Space Expansion Factor	
Vapor Space Expansion Factor:	0.0684
Daily Vapor Temperature Range (deg. R):	36.8348
Daily Vapor Pressure Range (psia):	0.0029
Breather Vent Press. Setting Range(psia):	0.0600
Vapor Pressure at Daily Average Liquid Surface Temperature (psia):	0.0043
Vapor Pressure at Daily Minimum Liquid Surface Temperature (psia):	0.0031
Vapor Pressure at Daily Maximum Liquid Surface Temperature (psia):	0.0060
Daily Avg. Liquid Surface Temp. (deg R):	507.9647
Daily Min. Liquid Surface Temp. (deg R):	498.7560
Daily Max. Liquid Surface Temp. (deg R):	517.1734
Daily Ambient Temp. Range (deg. R):	24.3583
Vented Vapor Saturation Factor	
Vented Vapor Saturation Factor:	0.9969
Vapor Pressure at Daily Average Liquid: Surface Temperature (psia):	0.0043
Vapor Space Outage (ft):	13.6667

Working Losses (lb):	1,182.4095
Vapor Molecular Weight (lb/lb-mole):	130.0000
Vapor Pressure at Daily Average Liquid Surface Temperature (psia):	0.0043
Annual Net Throughput (gal/yr.):	128,404,080.0000
Annual Turnovers:	56.4443
Turnover Factor:	0.6982
Maximum Liquid Volume (gal):	2,274,879.6529
Maximum Liquid Height (ft):	50.0000
Tank Diameter (ft):	88.0000
Working Loss Product Factor:	1.0000

Total Losses (lb):	1,392.6414

TANKS 4.0.9d
Emissions Report - Detail Format
Individual Tank Emission Totals

Emissions Report for: Annual

203-T-0015 - Vertical Fixed Roof Tank
Belfield, North Dakota

	Losses(lbs)		
Components	Working Loss	Breathing Loss	Total Emissions
Distillate fuel oil no. 2	1,182.41	210.23	1,392.64

TANKS 4.0.9d
Emissions Report - Detail Format
Tank Indentification and Physical Characteristics

Identification

User Identification:	203-T-0017
City:	Belfield
State:	North Dakota
Company:	Meridian
Type of Tank:	Vertical Fixed Roof Tank
Description:	Vacuum Gas Oil

Tank Dimensions

Shell Height (ft):	60.00
Diameter (ft):	63.00
Liquid Height (ft) :	50.00
Avg. Liquid Height (ft):	20.00
Volume (gallons):	1,165,934.57
Turnovers:	39.05
Net Throughput(gal/yr):	45,530,100.00
Is Tank Heated (y/n):	N

Paint Characteristics

Shell Color/Shade:	Gray/Light
Shell Condition	Good
Roof Color/Shade:	Gray/Light
Roof Condition:	Good

Roof Characteristics

Type:	Cone
Height (ft)	5.00
Slope (ft/ft) (Cone Roof)	0.16

Breather Vent Settings

Vacuum Settings (psig):	-0.03
Pressure Settings (psig)	0.03

Meterological Data used in Emissions Calculations: Bismarck, North Dakota (Avg Atmospheric Pressure = 13.86 psia)

TANKS 4.0.9d
Emissions Report - Detail Format
Liquid Contents of Storage Tank

203-T-0017 - Vertical Fixed Roof Tank
Belfield, North Dakota

Mixture/Component	Month	Daily Liquid Surf. Temperature (deg F) Avg.	Min.	Max.	Liquid Bulk Temp (deg F)	Vapor Pressure (psia) Avg.	Min.	Max.	Vapor Mol. Weight.	Liquid Mass Fract.	Vapor Mass Fract.	Mol. Weight	Basis for Vapor Pressure Calculations
Residual oil no. 6	All	48.29	39.09	57.50	43.84	0.0000	0.0000	0.0000	190.0000			387.00	Option 1: VP40 = .00002 VP50 = .00003

TANKS 4.0.9d
Emissions Report - Detail Format
Detail Calculations (AP-42)

203-T-0017 - Vertical Fixed Roof Tank
Belfield, North Dakota

Annual Emission Calcaulations	
Standing Losses (lb):	3.1880
Vapor Space Volume (cu ft):	129,885.2211
Vapor Density (lb/cu ft):	0.0000
Vapor Space Expansion Factor:	0.0682
Vented Vapor Saturation Factor:	0.9999
Tank Vapor Space Volume:	
Vapor Space Volume (cu ft):	129,885.2211
Tank Diameter (ft):	63.0000
Vapor Space Outage (ft):	41.6667
Tank Shell Height (ft):	60.0000
Average Liquid Height (ft):	20.0000
Roof Outage (ft):	1.6667
Roof Outage (Cone Roof)	
Roof Outage (ft):	1.6667
Roof Height (ft):	5.0000
Roof Slope (ft/ft):	0.1600
Shell Radius (ft):	31.5000
Vapor Density	
Vapor Density (lb/cu ft):	0.0000
Vapor Molecular Weight (lb/lb-mole):	190.0000
Vapor Pressure at Daily Average Liquid Surface Temperature (psia):	0.0000
Daily Avg. Liquid Surface Temp. (deg. R):	507.9647
Daily Average Ambient Temp. (deg. F):	41.5958
Ideal Gas Constant R (psia cuft / (lb-mol-deg R)):	10.731
Liquid Bulk Temperature (deg. R):	503.5058
Tank Paint Solar Absorptance (Shell):	0.5400
Tank Paint Solar Absorptance (Roof):	0.5400
Daily Total Solar Insulation Factor (Btu/sqft day):	1,276.2450
Vapor Space Expansion Factor	
Vapor Space Expansion Factor:	0.0682
Daily Vapor Temperature Range (deg. R):	36.8348
Daily Vapor Pressure Range (psia):	0.0000
Breather Vent Press. Setting Range(psia):	0.0600
Vapor Pressure at Daily Average Liquid Surface Temperature (psia):	0.0000
Vapor Pressure at Daily Minimum Liquid Surface Temperature (psia):	0.0000
Vapor Pressure at Daily Maximum Liquid Surface Temperature (psia):	0.0000
Daily Avg. Liquid Surface Temp. (deg R):	507.9647
Daily Min. Liquid Surface Temp. (deg R):	498.7560
Daily Max. Liquid Surface Temp. (deg R):	517.1734
Daily Ambient Temp. Range (deg. R):	24.3583
Vented Vapor Saturation Factor	
Vented Vapor Saturation Factor:	0.9999
Vapor Pressure at Daily Average Liquid: Surface Temperature (psia):	0.0000
Vapor Space Outage (ft):	41.6667

Working Losses (lb):	5.4485
Vapor Molecular Weight (lb/lb-mole):	190.0000
Vapor Pressure at Daily Average Liquid Surface Temperature (psia):	0.0000
Annual Net Throughput (gal/yr.):	45,530,100.0000
Annual Turnovers:	39.0503
Turnover Factor:	0.9349
Maximum Liquid Volume (gal):	1,165,934.5742
Maximum Liquid Height (ft):	50.0000
Tank Diameter (ft):	63.0000
Working Loss Product Factor:	1.0000

Total Losses (lb):	8.6365

TANKS 4.0.9d
Emissions Report - Detail Format
Individual Tank Emission Totals

Emissions Report for: Annual

203-T-0017 - Vertical Fixed Roof Tank
Belfield, North Dakota

	Losses(lbs)		
Components	Working Loss	Breathing Loss	Total Emissions
Residual oil no. 6	5.45	3.19	8.64

TANKS 4.0.9d
Emissions Report - Detail Format
Tank Indentification and Physical Characteristics

Identification

User Identification:	203-T-0018
City:	Belfield
State:	North Dakota
Company:	Meridian
Type of Tank:	Internal Floating Roof Tank
Description:	FCC Naphtha

Tank Dimensions

Diameter (ft):	63.00
Volume (gallons):	1,399,104.00
Turnovers:	26.78
Self Supp. Roof? (y/n):	Y
No. of Columns:	0.00
Eff. Col. Diam. (ft):	0.00

Paint Characteristics

Internal Shell Condition:	Light Rust
Shell Color/Shade:	Gray/Light
Shell Condition	Good
Roof Color/Shade:	Gray/Light
Roof Condition:	Good

Rim-Seal System

Primary Seal:	Liquid-mounted
Secondary Seal	Rim-mounted

Deck Characteristics

Deck Fitting Category:	Detail
Deck Type:	Welded

Deck Fitting/Status	Quantity
Access Hatch (24-in. Diam.)/Bolted Cover, Gasketed	1
Automatic Gauge Float Well/Bolted Cover, Gasketed	1
Roof Leg or Hanger Well/Fixed	18
Sample Pipe or Well (24-in. Diam.)/Slotted Pipe-Sliding Cover, Gask.	1
Vacuum Breaker (10-in. Diam.)/Weighted Mech. Actuation, Gask.	1

Meterological Data used in Emissions Calculations: Bismarck, North Dakota (Avg Atmospheric Pressure = 13.86 psia)

TANKS 4.0.9d
Emissions Report - Detail Format
Liquid Contents of Storage Tank

203-T-0018 - Internal Floating Roof Tank
Belfield, North Dakota

Mixture/Component	Month	Daily Liquid Surf. Temperature (deg F) Avg.	Min.	Max.	Liquid Bulk Temp (deg F)	Vapor Pressure (psia) Avg.	Min.	Max.	Vapor Mol. Weight.	Liquid Mass Fract.	Vapor Mass Fract.	Mol. Weight	Basis for Vapor Pressure Calculations
Gasoline (RVP 15.0)	Jan	30.90	24.94	36.87	43.84	4.6376	N/A	N/A	60.0000			92.00	Option 4: RVP=15, ASTM Slope=3
Gasoline (RVP 15.0)	Feb	34.98	28.04	41.91	43.84	5.0388	N/A	N/A	60.0000			92.00	Option 4: RVP=15, ASTM Slope=3
Gasoline (RVP 15.0)	Mar	42.09	33.80	50.39	43.84	5.8049	N/A	N/A	60.0000			92.00	Option 4: RVP=15, ASTM Slope=3
Gasoline (RVP 15.0)	Apr	50.10	39.90	60.29	43.84	6.7748	N/A	N/A	60.0000			92.00	Option 4: RVP=15, ASTM Slope=3
Gasoline (RVP 15.0)	May	56.81	45.06	68.55	43.84	7.6833	N/A	N/A	60.0000			92.00	Option 4: RVP=15, ASTM Slope=3
Gasoline (RVP 15.0)	Jun	61.81	49.29	74.32	43.84	8.4212	N/A	N/A	60.0000			92.00	Option 4: RVP=15, ASTM Slope=3
Gasoline (RVP 15.0)	Jul	64.71	51.53	77.88	43.84	8.8740	N/A	N/A	60.0000			92.00	Option 4: RVP=15, ASTM Slope=3
Gasoline (RVP 15.0)	Aug	62.42	50.31	74.54	43.84	8.5158	N/A	N/A	60.0000			92.00	Option 4: RVP=15, ASTM Slope=3
Gasoline (RVP 15.0)	Sep	55.34	45.27	65.40	43.84	7.4767	N/A	N/A	60.0000			92.00	Option 4: RVP=15, ASTM Slope=3
Gasoline (RVP 15.0)	Oct	48.45	40.33	56.58	43.84	6.5661	N/A	N/A	60.0000			92.00	Option 4: RVP=15, ASTM Slope=3
Gasoline (RVP 15.0)	Nov	39.43	33.50	45.36	43.84	5.5080	N/A	N/A	60.0000			92.00	Option 4: RVP=15, ASTM Slope=3
Gasoline (RVP 15.0)	Dec	32.50	27.06	37.95	43.84	4.7922	N/A	N/A	60.0000			92.00	Option 4: RVP=15, ASTM Slope=3

TANKS 4.0.9d
Emissions Report - Detail Format
Detail Calculations (AP-42)

203-T-0018 - Internal Floating Roof Tank
Belfield, North Dakota

Month:	January	February	March	April	May	June	July	August	September	October	November	December
Rim Seal Losses (lb):	9.5894	10.6278	12.7408	15.7022	18.8346	21.7009	23.6354	22.0930	18.0870	15.0347	11.9005	9.9845
Seal Factor A (lb-mole/ft-yr):	0.3000	0.3000	0.3000	0.3000	0.3000	0.3000	0.3000	0.3000	0.3000	0.3000	0.3000	0.3000
Seal Factor B (lb-mole/ft-yr (mph)^n):	0.6000	0.6000	0.6000	0.6000	0.6000	0.6000	0.6000	0.6000	0.6000	0.6000	0.6000	0.6000
Value of Vapor Pressure Function:	0.1015	0.1125	0.1348	0.1662	0.1993	0.2296	0.2501	0.2338	0.1914	0.1591	0.1259	0.1057
Vapor Pressure at Daily Average Liquid Surface Temperature (psia):	4.6376	5.0388	5.8049	6.7748	7.6833	8.4212	8.8740	8.5158	7.4767	6.5661	5.5080	4.7922
Tank Diameter (ft):	63.0000	63.0000	63.0000	63.0000	63.0000	63.0000	63.0000	63.0000	63.0000	63.0000	63.0000	63.0000
Vapor Molecular Weight (lb/lb-mole):	60.0000	60.0000	60.0000	60.0000	60.0000	60.0000	60.0000	60.0000	60.0000	60.0000	60.0000	60.0000
Product Factor:	1.0000	1.0000	1.0000	1.0000	1.0000	1.0000	1.0000	1.0000	1.0000	1.0000	1.0000	1.0000
Withdrawal Losses (lb):	9.3472	9.3472	9.3472	9.3472	9.3472	9.3472	9.3472	9.3472	9.3472	9.3472	9.3472	9.3472
Number of Columns:	0.0000	0.0000	0.0000	0.0000	0.0000	0.0000	0.0000	0.0000	0.0000	0.0000	0.0000	0.0000
Effective Column Diameter (ft):	0.0000	0.0000	0.0000	0.0000	0.0000	0.0000	0.0000	0.0000	0.0000	0.0000	0.0000	0.0000
Net Throughput (gal/mo.):	3,122,333.7500	3,122,333.7500	3,122,333.7500	3,122,333.7500	3,122,333.7500	3,122,333.7500	3,122,333.7500	3,122,333.7500	3,122,333.7500	3,122,333.7500	3,122,333.7500	3,122,333.7500
Shell Clingage Factor (bbl/1000 sqft):	0.0015	0.0015	0.0015	0.0015	0.0015	0.0015	0.0015	0.0015	0.0015	0.0015	0.0015	0.0015
Average Organic Liquid Density (lb/gal):	5.6000	5.6000	5.6000	5.6000	5.6000	5.6000	5.6000	5.6000	5.6000	5.6000	5.6000	5.6000
Tank Diameter (ft):	63.0000	63.0000	63.0000	63.0000	63.0000	63.0000	63.0000	63.0000	63.0000	63.0000	63.0000	63.0000
Deck Fitting Losses (lb):	27.1954	30.1402	36.1326	44.5310	53.4145	61.5432	67.0295	62.6553	51.2944	42.6382	33.7496	28.3157
Value of Vapor Pressure Function:	0.1015	0.1125	0.1348	0.1662	0.1993	0.2296	0.2501	0.2338	0.1914	0.1591	0.1259	0.1057
Vapor Molecular Weight (lb/lb-mole):	60.0000	60.0000	60.0000	60.0000	60.0000	60.0000	60.0000	60.0000	60.0000	60.0000	60.0000	60.0000
Product Factor:	1.0000	1.0000	1.0000	1.0000	1.0000	1.0000	1.0000	1.0000	1.0000	1.0000	1.0000	1.0000
Tot. Roof Fitting Loss Fact.(lb-mole/yr):	53.6000	53.6000	53.6000	53.6000	53.6000	53.6000	53.6000	53.6000	53.6000	53.6000	53.6000	53.6000
Deck Seam Losses (lb):	0.0000	0.0000	0.0000	0.0000	0.0000	0.0000	0.0000	0.0000	0.0000	0.0000	0.0000	0.0000
Deck Seam Length (ft):	0.0000	0.0000	0.0000	0.0000	0.0000	0.0000	0.0000	0.0000	0.0000	0.0000	0.0000	0.0000
Deck Seam Loss per Unit Length Factor (lb-mole/ft-yr):	0.0000	0.0000	0.0000	0.0000	0.0000	0.0000	0.0000	0.0000	0.0000	0.0000	0.0000	0.0000
Deck Seam Length Factor(ft/sqft):	0.0000	0.0000	0.0000	0.0000	0.0000	0.0000	0.0000	0.0000	0.0000	0.0000	0.0000	0.0000
Tank Diameter (ft):	63.0000	63.0000	63.0000	63.0000	63.0000	63.0000	63.0000	63.0000	63.0000	63.0000	63.0000	63.0000
Vapor Molecular Weight (lb/lb-mole):	60.0000	60.0000	60.0000	60.0000	60.0000	60.0000	60.0000	60.0000	60.0000	60.0000	60.0000	60.0000
Product Factor:	1.0000	1.0000	1.0000	1.0000	1.0000	1.0000	1.0000	1.0000	1.0000	1.0000	1.0000	1.0000
Total Losses (lb):	46.1320	50.1152	58.2205	69.5803	81.5963	92.5912	100.0121	94.0955	78.7286	67.0201	54.9973	47.6473

Roof Fitting/Status	Quantity	Roof Fitting Loss Factors KFa(lb-mole/yr)	KFb(lb-mole/(yr mph^n))	m	Losses(lb)
Access Hatch (24-in. Diam.)/Bolted Cover, Gasketed	1	1.60	0.00	0.00	16.1109
Automatic Gauge Float Well/Bolted Cover, Gasketed	1	2.80	0.00	0.00	28.1940
Roof Leg or Hanger Well/Fixed	18	0.00	0.00	0.00	0.0000
Sample Pipe or Well (24-in. Diam.)/Slotted Pipe-Sliding Cover, Gask.	1	43.00	0.00	0.00	432.9792
Vacuum Breaker (10-in. Diam.)/Weighted Mech. Actuation, Gask.	1	6.20	1.20	0.94	62.4296

TANKS 4.0.9d
Emissions Report - Detail Format
Individual Tank Emission Totals

Emissions Report for: January, February, March, April, May, June, July, August, September, October, November, December

203-T-0018 - Internal Floating Roof Tank
Belfield, North Dakota

	Losses(lbs)				
Components	Rim Seal Loss	Withdrawl Loss	Deck Fitting Loss	Deck Seam Loss	Total Emissions
Gasoline (RVP 15.0)	189.93	112.17	538.64	0.00	840.74

TANKS 4.0.9d
Emissions Report - Detail Format
Tank Indentification and Physical Characteristics

Identification

User Identification:	203-T-0020
City:	Belfield
State:	North Dakota
Company:	Meridian
Type of Tank:	Internal Floating Roof Tank
Description:	Alkylate

Tank Dimensions

Diameter (ft):	63.00
Volume (gallons):	1,399,104.00
Turnovers:	26.78
Self Supp. Roof? (y/n):	Y
No. of Columns:	0.00
Eff. Col. Diam. (ft):	0.00

Paint Characteristics

Internal Shell Condition:	Light Rust
Shell Color/Shade:	Gray/Light
Shell Condition	Good
Roof Color/Shade:	Gray/Light
Roof Condition:	Good

Rim-Seal System

Primary Seal:	Liquid-mounted
Secondary Seal	Rim-mounted

Deck Characteristics

Deck Fitting Category:	Detail
Deck Type:	Welded

Deck Fitting/Status	Quantity
Access Hatch (24-in. Diam.)/Bolted Cover, Gasketed	1
Automatic Gauge Float Well/Bolted Cover, Gasketed	1
Roof Leg or Hanger Well/Fixed	18
Sample Pipe or Well (24-in. Diam.)/Slotted Pipe-Sliding Cover, Gask.	1
Vacuum Breaker (10-in. Diam.)/Weighted Mech. Actuation, Gask.	1

Meterological Data used in Emissions Calculations: Bismarck, North Dakota (Avg Atmospheric Pressure = 13.86 psia)

TANKS 4.0.9d
Emissions Report - Detail Format
Liquid Contents of Storage Tank

203-T-0020 - Internal Floating Roof Tank
Belfield, North Dakota

Mixture/Component	Month	Daily Liquid Surf. Temperature (deg F) Avg.	Min.	Max.	Liquid Bulk Temp (deg F)	Vapor Pressure (psia) Avg.	Min.	Max.	Vapor Mol. Weight.	Liquid Mass Fract.	Vapor Mass Fract.	Mol. Weight	Basis for Vapor Pressure Calculations
Gasoline (RVP 10)	Jan	30.90	24.94	36.87	43.84	2.8523	N/A	N/A	66.0000			92.00	Option 4: RVP=10, ASTM Slope=3
Gasoline (RVP 10)	Feb	34.98	28.04	41.91	43.84	3.1146	N/A	N/A	66.0000			92.00	Option 4: RVP=10, ASTM Slope=3
Gasoline (RVP 10)	Mar	42.09	33.80	50.39	43.84	3.6191	N/A	N/A	66.0000			92.00	Option 4: RVP=10, ASTM Slope=3
Gasoline (RVP 10)	Apr	50.10	39.90	60.29	43.84	4.2635	N/A	N/A	66.0000			92.00	Option 4: RVP=10, ASTM Slope=3
Gasoline (RVP 10)	May	56.81	45.06	68.55	43.84	4.8723	N/A	N/A	66.0000			92.00	Option 4: RVP=10, ASTM Slope=3
Gasoline (RVP 10)	Jun	61.81	49.29	74.32	43.84	5.3700	N/A	N/A	66.0000			92.00	Option 4: RVP=10, ASTM Slope=3
Gasoline (RVP 10)	Jul	64.71	51.53	77.88	43.84	5.6768	N/A	N/A	66.0000			92.00	Option 4: RVP=10, ASTM Slope=3
Gasoline (RVP 10)	Aug	62.42	50.31	74.54	43.84	5.4341	N/A	N/A	66.0000			92.00	Option 4: RVP=10, ASTM Slope=3
Gasoline (RVP 10)	Sep	55.34	45.27	65.40	43.84	4.7335	N/A	N/A	66.0000			92.00	Option 4: RVP=10, ASTM Slope=3
Gasoline (RVP 10)	Oct	48.45	40.33	56.58	43.84	4.1244	N/A	N/A	66.0000			92.00	Option 4: RVP=10, ASTM Slope=3
Gasoline (RVP 10)	Nov	39.43	33.50	45.36	43.84	3.4231	N/A	N/A	66.0000			92.00	Option 4: RVP=10, ASTM Slope=3
Gasoline (RVP 10)	Dec	32.50	27.06	37.95	43.84	2.9532	N/A	N/A	66.0000			92.00	Option 4: RVP=10, ASTM Slope=3

TANKS 4.0.9d
Emissions Report - Detail Format
Detail Calculations (AP-42)

203-T-0020 - Internal Floating Roof Tank
Belfield, North Dakota

Month:	January	February	March	April	May	June	July	August	September	October	November	December
Rim Seal Losses (lb):	5.9802	6.6046	7.8480	9.5249	11.2108	12.6714	13.6121	12.8650	10.8168	9.1539	7.3581	6.2188
Seal Factor A (lb-mole/ft-yr):	0.3000	0.3000	0.3000	0.3000	0.3000	0.3000	0.3000	0.3000	0.3000	0.3000	0.3000	0.3000
Seal Factor B (lb-mole/ft-yr (mph)^n):	0.6000	0.6000	0.6000	0.6000	0.6000	0.6000	0.6000	0.6000	0.6000	0.6000	0.6000	0.6000
Value of Vapor Pressure Function:	0.0575	0.0635	0.0755	0.0916	0.1078	0.1219	0.1309	0.1238	0.1041	0.0881	0.0708	0.0598
Vapor Pressure at Daily Average Liquid Surface Temperature (psia):	2.8523	3.1146	3.6191	4.2635	4.8723	5.3700	5.6768	5.4341	4.7335	4.1244	3.4231	2.9532
Tank Diameter (ft):	63.0000	63.0000	63.0000	63.0000	63.0000	63.0000	63.0000	63.0000	63.0000	63.0000	63.0000	63.0000
Vapor Molecular Weight (lb/lb-mole):	66.0000	66.0000	66.0000	66.0000	66.0000	66.0000	66.0000	66.0000	66.0000	66.0000	66.0000	66.0000
Product Factor:	1.0000	1.0000	1.0000	1.0000	1.0000	1.0000	1.0000	1.0000	1.0000	1.0000	1.0000	1.0000
Withdrawal Losses (lb):	9.3472	9.3472	9.3472	9.3472	9.3472	9.3472	9.3472	9.3472	9.3472	9.3472	9.3472	9.3472
Number of Columns:	0.0000	0.0000	0.0000	0.0000	0.0000	0.0000	0.0000	0.0000	0.0000	0.0000	0.0000	0.0000
Effective Column Diameter (ft):	0.0000	0.0000	0.0000	0.0000	0.0000	0.0000	0.0000	0.0000	0.0000	0.0000	0.0000	0.0000
Net Throughput (gal/mo.):	3,122,333.7500	3,122,333.7500	3,122,333.7500	3,122,333.7500	3,122,333.7500	3,122,333.7500	3,122,333.7500	3,122,333.7500	3,122,333.7500	3,122,333.7500	3,122,333.7500	3,122,333.7500
Shell Clingage Factor (bbl/1000 sqft):	0.0015	0.0015	0.0015	0.0015	0.0015	0.0015	0.0015	0.0015	0.0015	0.0015	0.0015	0.0015
Average Organic Liquid Density (lb/gal):	5.6000	5.6000	5.6000	5.6000	5.6000	5.6000	5.6000	5.6000	5.6000	5.6000	5.6000	5.6000
Tank Diameter (ft):	63.0000	63.0000	63.0000	63.0000	63.0000	63.0000	63.0000	63.0000	63.0000	63.0000	63.0000	63.0000
Deck Fitting Losses (lb):	16.9598	18.7306	22.2567	27.0124	31.7935	35.9357	38.6037	36.4850	30.6763	25.9602	20.8673	17.6363
Value of Vapor Pressure Function:	0.0575	0.0635	0.0755	0.0916	0.1078	0.1219	0.1309	0.1238	0.1041	0.0881	0.0708	0.0598
Vapor Molecular Weight (lb/lb-mole):	66.0000	66.0000	66.0000	66.0000	66.0000	66.0000	66.0000	66.0000	66.0000	66.0000	66.0000	66.0000
Product Factor:	1.0000	1.0000	1.0000	1.0000	1.0000	1.0000	1.0000	1.0000	1.0000	1.0000	1.0000	1.0000
Tot. Roof Fitting Loss Fact.(lb-mole/yr):	53.6000	53.6000	53.6000	53.6000	53.6000	53.6000	53.6000	53.6000	53.6000	53.6000	53.6000	53.6000
Deck Seam Losses (lb):	0.0000	0.0000	0.0000	0.0000	0.0000	0.0000	0.0000	0.0000	0.0000	0.0000	0.0000	0.0000
Deck Seam Length (ft):	0.0000	0.0000	0.0000	0.0000	0.0000	0.0000	0.0000	0.0000	0.0000	0.0000	0.0000	0.0000
Deck Seam Loss per Unit Length Factor (lb-mole/ft-yr):	0.0000	0.0000	0.0000	0.0000	0.0000	0.0000	0.0000	0.0000	0.0000	0.0000	0.0000	0.0000
Deck Seam Length Factor(ft/sqft):	0.0000	0.0000	0.0000	0.0000	0.0000	0.0000	0.0000	0.0000	0.0000	0.0000	0.0000	0.0000
Tank Diameter (ft):	63.0000	63.0000	63.0000	63.0000	63.0000	63.0000	63.0000	63.0000	63.0000	63.0000	63.0000	63.0000
Vapor Molecular Weight (lb/lb-mole):	66.0000	66.0000	66.0000	66.0000	66.0000	66.0000	66.0000	66.0000	66.0000	66.0000	66.0000	66.0000
Product Factor:	1.0000	1.0000	1.0000	1.0000	1.0000	1.0000	1.0000	1.0000	1.0000	1.0000	1.0000	1.0000
Total Losses (lb):	32.2872	34.6825	39.4519	45.8845	52.3514	57.9543	61.5630	58.6972	50.8403	44.4613	37.5726	33.2023

Roof Fitting/Status	Quantity	Roof Fitting Loss Factors KFa(lb-mole/yr)	KFb(lb-mole/(yr mph^n))	m	Losses(lb)
Access Hatch (24-in. Diam.)/Bolted Cover, Gasketed	1	1.60	0.00	0.00	9.6567
Automatic Gauge Float Well/Bolted Cover, Gasketed	1	2.80	0.00	0.00	16.8992
Roof Leg or Hanger Well/Fixed	18	0.00	0.00	0.00	0.0000
Sample Pipe or Well (24-in. Diam.)/Slotted Pipe-Sliding Cover, Gask.	1	43.00	0.00	0.00	259.5234
Vacuum Breaker (10-in. Diam.)/Weighted Mech. Actuation, Gask.	1	6.20	1.20	0.94	37.4197

TANKS 4.0.9d
Emissions Report - Detail Format
Individual Tank Emission Totals

Emissions Report for: January, February, March, April, May, June, July, August, September, October, November, December

203-T-0020 - Internal Floating Roof Tank
Belfield, North Dakota

	Losses(lbs)				
Components	Rim Seal Loss	Withdrawl Loss	Deck Fitting Loss	Deck Seam Loss	Total Emissions
Gasoline (RVP 10)	113.86	112.17	322.92	0.00	548.95

TANKS 4.0.9d
Emissions Report - Detail Format
Tank Indentification and Physical Characteristics

Identification

User Identification:	203-T-0022
City:	Belfield
State:	North Dakota
Company:	Meridian
Type of Tank:	Vertical Fixed Roof Tank
Description:	Diluent - Heavy Intermediates from FCC

Tank Dimensions

Shell Height (ft):	60.00
Diameter (ft):	63.00
Liquid Height (ft) :	50.00
Avg. Liquid Height (ft):	20.00
Volume (gallons):	1,165,934.57
Turnovers:	0.01
Net Throughput(gal/yr):	14,440.86
Is Tank Heated (y/n):	N

Paint Characteristics

Shell Color/Shade:	Gray/Light
Shell Condition	Good
Roof Color/Shade:	Gray/Light
Roof Condition:	Good

Roof Characteristics

Type:	Cone
Height (ft)	5.00
Slope (ft/ft) (Cone Roof)	0.16

Breather Vent Settings

Vacuum Settings (psig):	-0.03
Pressure Settings (psig)	0.03

Meterological Data used in Emissions Calculations: Bismarck, North Dakota (Avg Atmospheric Pressure = 13.86 psia)

TANKS 4.0.9d
Emissions Report - Detail Format
Liquid Contents of Storage Tank

203-T-0022 - Vertical Fixed Roof Tank
Belfield, North Dakota

Mixture/Component	Month	Daily Liquid Surf. Temperature (deg F) Avg.	Min.	Max.	Liquid Bulk Temp (deg F)	Vapor Pressure (psia) Avg.	Min.	Max.	Vapor Mol. Weight.	Liquid Mass Fract.	Vapor Mass Fract.	Mol. Weight	Basis for Vapor Pressure Calculations
Distillate fuel oil no. 2	All	48.29	39.09	57.50	43.84	0.0043	0.0031	0.0060	130.0000			188.00	Option 1: VP40 = .0031 VP50 = .0045

TANKS 4.0.9d
Emissions Report - Detail Format
Detail Calculations (AP-42)

203-T-0022 - Vertical Fixed Roof Tank
Belfield, North Dakota

Annual Emission Calcaulations	
Standing Losses (lb):	326.4459
Vapor Space Volume (cu ft):	129,885.2211
Vapor Density (lb/cu ft):	0.0001
Vapor Space Expansion Factor:	0.0684
Vented Vapor Saturation Factor:	0.9907
Tank Vapor Space Volume:	
Vapor Space Volume (cu ft):	129,885.2211
Tank Diameter (ft):	63.0000
Vapor Space Outage (ft):	41.6667
Tank Shell Height (ft):	60.0000
Average Liquid Height (ft):	20.0000
Roof Outage (ft):	1.6667
Roof Outage (Cone Roof)	
Roof Outage (ft):	1.6667
Roof Height (ft):	5.0000
Roof Slope (ft/ft):	0.1600
Shell Radius (ft):	31.5000
Vapor Density	
Vapor Density (lb/cu ft):	0.0001
Vapor Molecular Weight (lb/lb-mole):	130.0000
Vapor Pressure at Daily Average Liquid Surface Temperature (psia):	0.0043
Daily Avg. Liquid Surface Temp. (deg. R):	507.9647
Daily Average Ambient Temp. (deg. F):	41.5958
Ideal Gas Constant R (psia cuft / (lb-mol-deg R)):	10.731
Liquid Bulk Temperature (deg. R):	503.5058
Tank Paint Solar Absorptance (Shell):	0.5400
Tank Paint Solar Absorptance (Roof):	0.5400
Daily Total Solar Insulation Factor (Btu/sqft day):	1,276.2450
Vapor Space Expansion Factor	
Vapor Space Expansion Factor:	0.0684
Daily Vapor Temperature Range (deg. R):	36.8348
Daily Vapor Pressure Range (psia):	0.0029
Breather Vent Press. Setting Range(psia):	0.0600
Vapor Pressure at Daily Average Liquid Surface Temperature (psia):	0.0043
Vapor Pressure at Daily Minimum Liquid Surface Temperature (psia):	0.0031
Vapor Pressure at Daily Maximum Liquid Surface Temperature (psia):	0.0060
Daily Avg. Liquid Surface Temp. (deg R):	507.9647
Daily Min. Liquid Surface Temp. (deg R):	498.7560
Daily Max. Liquid Surface Temp. (deg R):	517.1734
Daily Ambient Temp. Range (deg. R):	24.3583
Vented Vapor Saturation Factor	
Vented Vapor Saturation Factor:	0.9907
Vapor Pressure at Daily Average Liquid: Surface Temperature (psia):	0.0043
Vapor Space Outage (ft):	41.6667

Working Losses (lb):	0.1905
Vapor Molecular Weight (lb/lb-mole):	130.0000
Vapor Pressure at Daily Average Liquid Surface Temperature (psia):	0.0043
Annual Net Throughput (gal/yr.):	14,440.8600
Annual Turnovers:	0.0124
Turnover Factor:	1.0000
Maximum Liquid Volume (gal):	1,165,934.5742
Maximum Liquid Height (ft):	50.0000
Tank Diameter (ft):	63.0000
Working Loss Product Factor:	1.0000
Total Losses (lb):	326.6363

TANKS 4.0.9d
Emissions Report - Detail Format
Individual Tank Emission Totals

Emissions Report for: Annual

203-T-0022 - Vertical Fixed Roof Tank
Belfield, North Dakota

	Losses(lbs)		
Components	Working Loss	Breathing Loss	Total Emissions
Distillate fuel oil no. 2	0.19	326.45	326.64

TANKS 4.0.9d
Emissions Report - Detail Format
Tank Indentification and Physical Characteristics

Identification

User Identification:	203-T-0023
City:	Belfield
State:	North Dakota
Company:	Meridian
Type of Tank:	Vertical Fixed Roof Tank
Description:	Fuel Oil

Tank Dimensions

Shell Height (ft):	60.00
Diameter (ft):	88.00
Liquid Height (ft) :	50.00
Avg. Liquid Height (ft):	48.00
Volume (gallons):	2,274,879.65
Turnovers:	21.16
Net Throughput(gal/yr):	48,136,200.00
Is Tank Heated (y/n):	N

Paint Characteristics

Shell Color/Shade:	Gray/Light
Shell Condition	Good
Roof Color/Shade:	Gray/Light
Roof Condition:	Good

Roof Characteristics

Type:	Cone
Height (ft)	6.00
Slope (ft/ft) (Cone Roof)	0.14

Breather Vent Settings

Vacuum Settings (psig):	-0.03
Pressure Settings (psig)	0.03

Meterological Data used in Emissions Calculations: Bismarck, North Dakota (Avg Atmospheric Pressure = 13.86 psia)

TANKS 4.0.9d
Emissions Report - Detail Format
Liquid Contents of Storage Tank

203-T-0023 - Vertical Fixed Roof Tank
Belfield, North Dakota

Mixture/Component	Month	Daily Liquid Surf. Temperature (deg F) Avg.	Min.	Max.	Liquid Bulk Temp (deg F)	Vapor Pressure (psia) Avg.	Min.	Max.	Vapor Mol. Weight.	Liquid Mass Fract.	Vapor Mass Fract.	Mol. Weight	Basis for Vapor Pressure Calculations
Residual oil no. 6	All	48.29	39.09	57.50	43.84	0.0000	0.0000	0.0000	190.0000			387.00	Option 1: VP40 = .00002 VP50 = .00003

TANKS 4.0.9d
Emissions Report - Detail Format
Detail Calculations (AP-42)

203-T-0023 - Vertical Fixed Roof Tank
Belfield, North Dakota

Annual Emission Calcaulations	
Standing Losses (lb):	2.0900
Vapor Space Volume (cu ft):	85,149.7272
Vapor Density (lb/cu ft):	0.0000
Vapor Space Expansion Factor:	0.0682
Vented Vapor Saturation Factor:	1.0000
Tank Vapor Space Volume:	
Vapor Space Volume (cu ft):	85,149.7272
Tank Diameter (ft):	88.0000
Vapor Space Outage (ft):	14.0000
Tank Shell Height (ft):	60.0000
Average Liquid Height (ft):	48.0000
Roof Outage (ft):	2.0000
Roof Outage (Cone Roof)	
Roof Outage (ft):	2.0000
Roof Height (ft):	6.0000
Roof Slope (ft/ft):	0.1400
Shell Radius (ft):	44.0000
Vapor Density	
Vapor Density (lb/cu ft):	0.0000
Vapor Molecular Weight (lb/lb-mole):	190.0000
Vapor Pressure at Daily Average Liquid Surface Temperature (psia):	0.0000
Daily Avg. Liquid Surface Temp. (deg. R):	507.9647
Daily Average Ambient Temp. (deg. F):	41.5958
Ideal Gas Constant R (psia cuft / (lb-mol-deg R)):	10.731
Liquid Bulk Temperature (deg. R):	503.5058
Tank Paint Solar Absorptance (Shell):	0.5400
Tank Paint Solar Absorptance (Roof):	0.5400
Daily Total Solar Insulation Factor (Btu/sqft day):	1,276.2450
Vapor Space Expansion Factor	
Vapor Space Expansion Factor:	0.0682
Daily Vapor Temperature Range (deg. R):	36.8348
Daily Vapor Pressure Range (psia):	0.0000
Breather Vent Press. Setting Range(psia):	0.0600
Vapor Pressure at Daily Average Liquid Surface Temperature (psia):	0.0000
Vapor Pressure at Daily Minimum Liquid Surface Temperature (psia):	0.0000
Vapor Pressure at Daily Maximum Liquid Surface Temperature (psia):	0.0000
Daily Avg. Liquid Surface Temp. (deg R):	507.9647
Daily Min. Liquid Surface Temp. (deg R):	498.7560
Daily Max. Liquid Surface Temp. (deg R):	517.1734
Daily Ambient Temp. Range (deg. R):	24.3583
Vented Vapor Saturation Factor	
Vented Vapor Saturation Factor:	1.0000
Vapor Pressure at Daily Average Liquid: Surface Temperature (psia):	0.0000
Vapor Space Outage (ft):	14.0000

Working Losses (lb):	6.1614
Vapor Molecular Weight (lb/lb-mole):	190.0000
Vapor Pressure at Daily Average Liquid Surface Temperature (psia):	0.0000
Annual Net Throughput (gal/yr.):	48,136,200.0000
Annual Turnovers:	21.1599
Turnover Factor:	1.0000
Maximum Liquid Volume (gal):	2,274,879.6529
Maximum Liquid Height (ft):	50.0000
Tank Diameter (ft):	88.0000
Working Loss Product Factor:	1.0000
Total Losses (lb):	8.2515

TANKS 4.0.9d
Emissions Report - Detail Format
Individual Tank Emission Totals

Emissions Report for: Annual

203-T-0023 - Vertical Fixed Roof Tank
Belfield, North Dakota

	Losses(lbs)		
Components	Working Loss	Breathing Loss	Total Emissions
Residual oil no. 6	6.16	2.09	8.25

TANKS 4.0.9d
Emissions Report - Detail Format
Tank Indentification and Physical Characteristics

Identification

User Identification:	203-T-0031
City:	Belfield
State:	North Dakota
Company:	Meridian
Type of Tank:	Internal Floating Roof Tank
Description:	Light Naphtha

Tank Dimensions

Diameter (ft):	63.00
Volume (gallons):	1,399,104.00
Turnovers:	35.61
Self Supp. Roof? (y/n):	Y
No. of Columns:	0.00
Eff. Col. Diam. (ft):	0.00

Paint Characteristics

Internal Shell Condition:	Light Rust
Shell Color/Shade:	Gray/Light
Shell Condition	Good
Roof Color/Shade:	Gray/Light
Roof Condition:	Good

Rim-Seal System

Primary Seal:	Liquid-mounted
Secondary Seal	Rim-mounted

Deck Characteristics

Deck Fitting Category:	Detail
Deck Type:	Welded

Deck Fitting/Status	Quantity
Access Hatch (24-in. Diam.)/Bolted Cover, Gasketed	1
Automatic Gauge Float Well/Bolted Cover, Gasketed	1
Roof Leg or Hanger Well/Fixed	18
Sample Pipe or Well (24-in. Diam.)/Slotted Pipe-Sliding Cover, Gask.	1
Vacuum Breaker (10-in. Diam.)/Weighted Mech. Actuation, Gask.	1

Meterological Data used in Emissions Calculations: Bismarck, North Dakota (Avg Atmospheric Pressure = 13.86 psia)

TANKS 4.0.9d
Emissions Report - Detail Format
Liquid Contents of Storage Tank

203-T-0031 - Internal Floating Roof Tank
Belfield, North Dakota

Mixture/Component	Month	Daily Liquid Surf. Temperature (deg F) Avg.	Min.	Max.	Liquid Bulk Temp (deg F)	Vapor Pressure (psia) Avg.	Min.	Max.	Vapor Mol. Weight.	Liquid Mass Fract.	Vapor Mass Fract.	Mol. Weight	Basis for Vapor Pressure Calculations
Gasoline (RVP 13)	Jan	30.90	24.94	36.87	43.84	3.9065	N/A	N/A	62.0000			92.00	Option 4: RVP=13, ASTM Slope=3
Gasoline (RVP 13)	Feb	34.98	28.04	41.91	43.84	4.2520	N/A	N/A	62.0000			92.00	Option 4: RVP=13, ASTM Slope=3
Gasoline (RVP 13)	Mar	42.09	33.80	50.39	43.84	4.9133	N/A	N/A	62.0000			92.00	Option 4: RVP=13, ASTM Slope=3
Gasoline (RVP 13)	Apr	50.10	39.90	60.29	43.84	5.7533	N/A	N/A	62.0000			92.00	Option 4: RVP=13, ASTM Slope=3
Gasoline (RVP 13)	May	56.81	45.06	68.55	43.84	6.5424	N/A	N/A	62.0000			92.00	Option 4: RVP=13, ASTM Slope=3
Gasoline (RVP 13)	Jun	61.81	49.29	74.32	43.84	7.1848	N/A	N/A	62.0000			92.00	Option 4: RVP=13, ASTM Slope=3
Gasoline (RVP 13)	Jul	64.71	51.53	77.88	43.84	7.5796	N/A	N/A	62.0000			92.00	Option 4: RVP=13, ASTM Slope=3
Gasoline (RVP 13)	Aug	62.42	50.31	74.54	43.84	7.2672	N/A	N/A	62.0000			92.00	Option 4: RVP=13, ASTM Slope=3
Gasoline (RVP 13)	Sep	55.34	45.27	65.40	43.84	6.3627	N/A	N/A	62.0000			92.00	Option 4: RVP=13, ASTM Slope=3
Gasoline (RVP 13)	Oct	48.45	40.33	56.58	43.84	5.5723	N/A	N/A	62.0000			92.00	Option 4: RVP=13, ASTM Slope=3
Gasoline (RVP 13)	Nov	39.43	33.50	45.36	43.84	4.6568	N/A	N/A	62.0000			92.00	Option 4: RVP=13, ASTM Slope=3
Gasoline (RVP 13)	Dec	32.50	27.06	37.95	43.84	4.0396	N/A	N/A	62.0000			92.00	Option 4: RVP=13, ASTM Slope=3

TANKS 4.0.9d
Emissions Report - Detail Format
Detail Calculations (AP-42)

203-T-0031 - Internal Floating Roof Tank
Belfield, North Dakota

Month:	January	February	March	April	May	June	July	August	September	October	November	December
Rim Seal Losses (lb):	8.0629	8.9185	10.6416	13.0123	15.4585	17.6365	19.0718	17.9298	14.8808	12.4828	9.9594	8.3890
Seal Factor A (lb-mole/ft-yr):	0.3000	0.3000	0.3000	0.3000	0.3000	0.3000	0.3000	0.3000	0.3000	0.3000	0.3000	0.3000
Seal Factor B (lb-mole/ft-yr (mph)^n):	0.6000	0.6000	0.6000	0.6000	0.6000	0.6000	0.6000	0.6000	0.6000	0.6000	0.6000	0.6000
Value of Vapor Pressure Function:	0.0826	0.0913	0.1090	0.1333	0.1583	0.1806	0.1953	0.1836	0.1524	0.1278	0.1020	0.0859
Vapor Pressure at Daily Average Liquid Surface Temperature (psia):	3.9065	4.2520	4.9133	5.7533	6.5424	7.1848	7.5796	7.2672	6.3627	5.5723	4.6568	4.0396
Tank Diameter (ft):	63.0000	63.0000	63.0000	63.0000	63.0000	63.0000	63.0000	63.0000	63.0000	63.0000	63.0000	63.0000
Vapor Molecular Weight (lb/lb-mole):	62.0000	62.0000	62.0000	62.0000	62.0000	62.0000	62.0000	62.0000	62.0000	62.0000	62.0000	62.0000
Product Factor:	1.0000	1.0000	1.0000	1.0000	1.0000	1.0000	1.0000	1.0000	1.0000	1.0000	1.0000	1.0000
Withdrawal Losses (lb):	12.4292	12.4292	12.4292	12.4292	12.4292	12.4292	12.4292	12.4292	12.4292	12.4292	12.4292	12.4292
Number of Columns:	0.0000	0.0000	0.0000	0.0000	0.0000	0.0000	0.0000	0.0000	0.0000	0.0000	0.0000	0.0000
Effective Column Diameter (ft):	0.0000	0.0000	0.0000	0.0000	0.0000	0.0000	0.0000	0.0000	0.0000	0.0000	0.0000	0.0000
Net Throughput (gal/mo.):	4,151,841.0833	4,151,841.0833	4,151,841.0833	4,151,841.0833	4,151,841.0833	4,151,841.0833	4,151,841.0833	4,151,841.0833	4,151,841.0833	4,151,841.0833	4,151,841.0833	4,151,841.0833
Shell Clingage Factor (bbl/1000 sqft):	0.0015	0.0015	0.0015	0.0015	0.0015	0.0015	0.0015	0.0015	0.0015	0.0015	0.0015	0.0015
Average Organic Liquid Density (lb/gal):	5.6000	5.6000	5.6000	5.6000	5.6000	5.6000	5.6000	5.6000	5.6000	5.6000	5.6000	5.6000
Tank Diameter (ft):	63.0000	63.0000	63.0000	63.0000	63.0000	63.0000	63.0000	63.0000	63.0000	63.0000	63.0000	63.0000
Deck Fitting Losses (lb):	22.8661	25.2926	30.1793	36.9027	43.8400	50.0168	54.0871	50.8485	42.2015	35.4009	28.2445	23.7911
Value of Vapor Pressure Function:	0.0826	0.0913	0.1090	0.1333	0.1583	0.1806	0.1953	0.1836	0.1524	0.1278	0.1020	0.0859
Vapor Molecular Weight (lb/lb-mole):	62.0000	62.0000	62.0000	62.0000	62.0000	62.0000	62.0000	62.0000	62.0000	62.0000	62.0000	62.0000
Product Factor:	1.0000	1.0000	1.0000	1.0000	1.0000	1.0000	1.0000	1.0000	1.0000	1.0000	1.0000	1.0000
Tot. Roof Fitting Loss Fact.(lb-mole/yr):	53.6000	53.6000	53.6000	53.6000	53.6000	53.6000	53.6000	53.6000	53.6000	53.6000	53.6000	53.6000
Deck Seam Losses (lb):	0.0000	0.0000	0.0000	0.0000	0.0000	0.0000	0.0000	0.0000	0.0000	0.0000	0.0000	0.0000
Deck Seam Length (ft):	0.0000	0.0000	0.0000	0.0000	0.0000	0.0000	0.0000	0.0000	0.0000	0.0000	0.0000	0.0000
Deck Seam Loss per Unit Length Factor (lb-mole/ft-yr):	0.0000	0.0000	0.0000	0.0000	0.0000	0.0000	0.0000	0.0000	0.0000	0.0000	0.0000	0.0000
Deck Seam Length Factor(ft/sqft):	0.0000	0.0000	0.0000	0.0000	0.0000	0.0000	0.0000	0.0000	0.0000	0.0000	0.0000	0.0000
Tank Diameter (ft):	63.0000	63.0000	63.0000	63.0000	63.0000	63.0000	63.0000	63.0000	63.0000	63.0000	63.0000	63.0000
Vapor Molecular Weight (lb/lb-mole):	62.0000	62.0000	62.0000	62.0000	62.0000	62.0000	62.0000	62.0000	62.0000	62.0000	62.0000	62.0000
Product Factor:	1.0000	1.0000	1.0000	1.0000	1.0000	1.0000	1.0000	1.0000	1.0000	1.0000	1.0000	1.0000
Total Losses (lb):	43.3582	46.6403	53.2500	62.3442	71.7276	80.0825	85.5880	81.2075	69.5115	60.3128	50.6330	44.6093

Roof Fitting/Status	Quantity	Roof Fitting Loss Factors KFa(lb-mole/yr)	KFb(lb-mole/(yr mph^n))	m	Losses(lb)
Access Hatch (24-in. Diam.)/Bolted Cover, Gasketed	1	1.60	0.00	0.00	13.2690
Automatic Gauge Float Well/Bolted Cover, Gasketed	1	2.80	0.00	0.00	23.2208
Roof Leg or Hanger Well/Fixed	18	0.00	0.00	0.00	0.0000
Sample Pipe or Well (24-in. Diam.)/Slotted Pipe-Sliding Cover, Gask.	1	43.00	0.00	0.00	356.6045
Vacuum Breaker (10-in. Diam.)/Weighted Mech. Actuation, Gask.	1	6.20	1.20	0.94	51.4174

TANKS 4.0.9d
Emissions Report - Detail Format
Individual Tank Emission Totals

Emissions Report for: January, February, March, April, May, June, July, August, September, October, November, December

203-T-0031 - Internal Floating Roof Tank
Belfield, North Dakota

	Losses(lbs)				
Components	Rim Seal Loss	Withdrawl Loss	Deck Fitting Loss	Deck Seam Loss	Total Emissions
Gasoline (RVP 13)	156.44	149.15	443.67	0.00	749.26

TANKS 4.0.9d
Emissions Report - Detail Format
Tank Indentification and Physical Characteristics

Identification

User Identification:	203-T-0033
City:	Belfield
State:	North Dakota
Company:	Meridian
Type of Tank:	Vertical Fixed Roof Tank
Description:	Light Slops

Tank Dimensions

Shell Height (ft):	30.00
Diameter (ft):	25.00
Liquid Height (ft) :	25.00
Avg. Liquid Height (ft):	9.00
Volume (gallons):	91,800.09
Turnovers:	22.96
Net Throughput(gal/yr):	2,107,875.00
Is Tank Heated (y/n):	N

Paint Characteristics

Shell Color/Shade:	Gray/Light
Shell Condition	Good
Roof Color/Shade:	Gray/Light
Roof Condition:	Good

Roof Characteristics

Type:	Cone
Height (ft)	2.00
Slope (ft/ft) (Cone Roof)	0.16

Breather Vent Settings

Vacuum Settings (psig):	-0.03
Pressure Settings (psig)	0.03

Meterological Data used in Emissions Calculations: Bismarck, North Dakota (Avg Atmospheric Pressure = 13.86 psia)

TANKS 4.0.9d
Emissions Report - Detail Format
Liquid Contents of Storage Tank

203-T-0033 - Vertical Fixed Roof Tank
Belfield, North Dakota

Mixture/Component	Month	Daily Liquid Surf. Temperature (deg F) Avg.	Min.	Max.	Liquid Bulk Temp (deg F)	Vapor Pressure (psia) Avg.	Min.	Max.	Vapor Mol. Weight.	Liquid Mass Fract.	Vapor Mass Fract.	Mol. Weight	Basis for Vapor Pressure Calculations
Gasoline (RVP 10)	Jan	30.90	24.94	36.87	43.84	2.8523	2.5010	3.2426	66.0000			92.00	Option 4: RVP=10, ASTM Slope=3
Gasoline (RVP 10)	Feb	34.98	28.04	41.91	43.84	3.1146	2.6793	3.6057	66.0000			92.00	Option 4: RVP=10, ASTM Slope=3
Gasoline (RVP 10)	Mar	42.09	33.80	50.39	43.84	3.6191	3.0366	4.2888	66.0000			92.00	Option 4: RVP=10, ASTM Slope=3
Gasoline (RVP 10)	Apr	50.10	39.90	60.29	43.84	4.2635	3.4572	5.2149	66.0000			92.00	Option 4: RVP=10, ASTM Slope=3
Gasoline (RVP 10)	May	56.81	45.06	68.55	43.84	4.8723	3.8480	6.1049	66.0000			92.00	Option 4: RVP=10, ASTM Slope=3
Gasoline (RVP 10)	Jun	61.81	49.29	74.32	43.84	5.3700	4.1949	6.7953	66.0000			92.00	Option 4: RVP=10, ASTM Slope=3
Gasoline (RVP 10)	Jul	64.71	51.53	77.88	43.84	5.6768	4.3883	7.2515	66.0000			92.00	Option 4: RVP=10, ASTM Slope=3
Gasoline (RVP 10)	Aug	62.42	50.31	74.54	43.84	5.4341	4.2818	6.8223	66.0000			92.00	Option 4: RVP=10, ASTM Slope=3
Gasoline (RVP 10)	Sep	55.34	45.27	65.40	43.84	4.7335	3.8651	5.7521	66.0000			92.00	Option 4: RVP=10, ASTM Slope=3
Gasoline (RVP 10)	Oct	48.45	40.33	56.58	43.84	4.1244	3.4887	4.8504	66.0000			92.00	Option 4: RVP=10, ASTM Slope=3
Gasoline (RVP 10)	Nov	39.43	33.50	45.36	43.84	3.4231	3.0176	3.8716	66.0000			92.00	Option 4: RVP=10, ASTM Slope=3
Gasoline (RVP 10)	Dec	32.50	27.06	37.95	43.84	2.9532	2.6217	3.3181	66.0000			92.00	Option 4: RVP=10, ASTM Slope=3

TANKS 4.0.9d
Emissions Report - Detail Format
Detail Calculations (AP-42)

203-T-0033 - Vertical Fixed Roof Tank
Belfield, North Dakota

Month:	January	February	March	April	May	June	July	August	September	October	November	December
Standing Losses (lb):	304.8452	344.4657	517.7923	715.0558	972.7526	1,114.2779	1,293.3938	1,128.5821	779.9994	567.0135	337.2424	284.3041
Vapor Space Volume (cu ft):	10,635.6001	10,635.6001	10,635.6001	10,635.6001	10,635.6001	10,635.6001	10,635.6001	10,635.6001	10,635.6001	10,635.6001	10,635.6001	10,635.6001
Vapor Density (lb/cu ft):	0.0358	0.0387	0.0444	0.0514	0.0580	0.0633	0.0666	0.0640	0.0565	0.0499	0.0422	0.0369
Vapor Space Expansion Factor:	0.1105	0.1367	0.1825	0.2569	0.3354	0.3952	0.4430	0.3871	0.2783	0.1976	0.1236	0.1026
Vented Vapor Saturation Factor:	0.2339	0.2185	0.1940	0.1696	0.1516	0.1395	0.1330	0.1381	0.1554	0.1743	0.2028	0.2277
Tank Vapor Space Volume:												
Vapor Space Volume (cu ft):	10,635.6001	10,635.6001	10,635.6001	10,635.6001	10,635.6001	10,635.6001	10,635.6001	10,635.6001	10,635.6001	10,635.6001	10,635.6001	10,635.6001
Tank Diameter (ft):	25.0000	25.0000	25.0000	25.0000	25.0000	25.0000	25.0000	25.0000	25.0000	25.0000	25.0000	25.0000
Vapor Space Outage (ft):	21.6667	21.6667	21.6667	21.6667	21.6667	21.6667	21.6667	21.6667	21.6667	21.6667	21.6667	21.6667
Tank Shell Height (ft):	30.0000	30.0000	30.0000	30.0000	30.0000	30.0000	30.0000	30.0000	30.0000	30.0000	30.0000	30.0000
Average Liquid Height (ft):	9.0000	9.0000	9.0000	9.0000	9.0000	9.0000	9.0000	9.0000	9.0000	9.0000	9.0000	9.0000
Roof Outage (ft):	0.6667	0.6667	0.6667	0.6667	0.6667	0.6667	0.6667	0.6667	0.6667	0.6667	0.6667	0.6667
Roof Outage (Cone Roof)												
Roof Outage (ft):	0.6667	0.6667	0.6667	0.6667	0.6667	0.6667	0.6667	0.6667	0.6667	0.6667	0.6667	0.6667
Roof Height (ft):	2.0000	2.0000	2.0000	2.0000	2.0000	2.0000	2.0000	2.0000	2.0000	2.0000	2.0000	2.0000
Roof Slope (ft/ft):	0.1600	0.1600	0.1600	0.1600	0.1600	0.1600	0.1600	0.1600	0.1600	0.1600	0.1600	0.1600
Shell Radius (ft):	12.5000	12.5000	12.5000	12.5000	12.5000	12.5000	12.5000	12.5000	12.5000	12.5000	12.5000	12.5000
Vapor Density												
Vapor Density (lb/cu ft):	0.0358	0.0387	0.0444	0.0514	0.0580	0.0633	0.0666	0.0640	0.0565	0.0499	0.0422	0.0369
Vapor Molecular Weight (lb/lb-mole):	66.0000	66.0000	66.0000	66.0000	66.0000	66.0000	66.0000	66.0000	66.0000	66.0000	66.0000	66.0000
Vapor Pressure at Daily Average Liquid Surface Temperature (psia):	2.8523	3.1146	3.6191	4.2635	4.8723	5.3700	5.6768	5.4341	4.7335	4.1244	3.4231	2.9532
Daily Avg. Liquid Surface Temp. (deg. R):	490.5714	494.6481	501.7622	509.7657	516.4753	521.4772	524.3774	522.0931	515.0067	508.1246	499.0999	492.1748
Daily Average Ambient Temp. (deg. F):	9.2500	15.7500	28.1500	42.9500	55.0000	64.3500	70.4000	68.3000	56.9500	45.6000	28.5500	13.9000
Ideal Gas Constant R (psia cuft / (lb-mol-deg R)):	10.731	10.731	10.731	10.731	10.731	10.731	10.731	10.731	10.731	10.731	10.731	10.731
Liquid Bulk Temperature (deg. R):	503.5058	503.5058	503.5058	503.5058	503.5058	503.5058	503.5058	503.5058	503.5058	503.5058	503.5058	503.5058
Tank Paint Solar Absorptance (Shell):	0.5400	0.5400	0.5400	0.5400	0.5400	0.5400	0.5400	0.5400	0.5400	0.5400	0.5400	0.5400
Tank Paint Solar Absorptance (Roof):	0.5400	0.5400	0.5400	0.5400	0.5400	0.5400	0.5400	0.5400	0.5400	0.5400	0.5400	0.5400
Daily Total Solar Insulation Factor (Btu/sqft day):	535.2345	820.4602	1,209.1160	1,558.7475	1,888.7083	2,096.8374	2,152.6770	1,833.8206	1,343.3212	900.7295	543.8008	431.4872
Vapor Space Expansion Factor												
Vapor Space Expansion Factor:	0.1105	0.1367	0.1825	0.2569	0.3354	0.3952	0.4430	0.3871	0.2783	0.1976	0.1236	0.1026
Daily Vapor Temperature Range (deg. R):	23.8607	27.7414	33.1858	40.7763	46.9893	50.0642	52.7085	48.4634	40.2550	32.4830	23.7023	21.7881
Daily Vapor Pressure Range (psia):	0.7416	0.9264	1.2522	1.7577	2.2569	2.6004	2.8632	2.5405	1.8870	1.3617	0.8540	0.6964
Breather Vent Press. Setting Range(psia):	0.0600	0.0600	0.0600	0.0600	0.0600	0.0600	0.0600	0.0600	0.0600	0.0600	0.0600	0.0600
Vapor Pressure at Daily Average Liquid Surface Temperature (psia):	2.8523	3.1146	3.6191	4.2635	4.8723	5.3700	5.6768	5.4341	4.7335	4.1244	3.4231	2.9532
Vapor Pressure at Daily Minimum Liquid Surface Temperature (psia):	2.5010	2.6793	3.0366	3.4572	3.8480	4.1949	4.3883	4.2818	3.8651	3.4887	3.0176	2.6217
Vapor Pressure at Daily Maximum Liquid Surface Temperature (psia):	3.2426	3.6057	4.2888	5.2149	6.1049	6.7953	7.2515	6.8223	5.7521	4.8504	3.8716	3.3181
Daily Avg. Liquid Surface Temp. (deg R):	490.5714	494.6481	501.7622	509.7657	516.4753	521.4772	524.3774	522.0931	515.0067	508.1246	499.0999	492.1748
Daily Min. Liquid Surface Temp. (deg R):	484.6062	487.7128	493.4657	499.5716	504.7280	508.9611	511.2003	509.9773	504.9429	500.0038	493.1744	486.7278
Daily Max. Liquid Surface Temp. (deg R):	496.5366	501.5835	510.0586	519.9597	528.2226	533.9932	537.5545	534.2090	525.0704	516.2453	505.0255	497.6218
Daily Ambient Temp. Range (deg. R):	21.9000	21.3000	20.7000	23.9000	25.6000	25.5000	28.0000	28.8000	27.7000	26.2000	21.5000	21.2000
Vented Vapor Saturation Factor												
Vented Vapor Saturation Factor:	0.2339	0.2185	0.1940	0.1696	0.1516	0.1395	0.1330	0.1381	0.1554	0.1743	0.2028	0.2277
Vapor Pressure at Daily Average Liquid: Surface Temperature (psia):	2.8523	3.1146	3.6191	4.2635	4.8723	5.3700	5.6768	5.4341	4.7335	4.1244	3.4231	2.9532
Vapor Space Outage (ft):	21.6667	21.6667	21.6667	21.6667	21.6667	21.6667	21.6667	21.6667	21.6667	21.6667	21.6667	21.6667

Working Losses (lb):	787.3207	859.7345	998.9842	1,176.8728	1,344.9144	1,482.2997	1,566.9657	1,499.9679	1,306.5805	1,138.4627	944.8849	815.1854
Vapor Molecular Weight (lb/lb-mole):	66.0000	66.0000	66.0000	66.0000	66.0000	66.0000	66.0000	66.0000	66.0000	66.0000	66.0000	66.0000
Vapor Pressure at Daily Average Liquid Surface Temperature (psia):	2.8523	3.1146	3.6191	4.2635	4.8723	5.3700	5.6768	5.4341	4.7335	4.1244	3.4231	2.9532
Net Throughput (gal/mo.):	175,656.2500	175,656.2500	175,656.2500	175,656.2500	175,656.2500	175,656.2500	175,656.2500	175,656.2500	175,656.2500	175,656.2500	175,656.2500	175,656.2500
Annual Turnovers:	22.9616	22.9616	22.9616	22.9616	22.9616	22.9616	22.9616	22.9616	22.9616	22.9616	22.9616	22.9616
Turnover Factor:	1.0000	1.0000	1.0000	1.0000	1.0000	1.0000	1.0000	1.0000	1.0000	1.0000	1.0000	1.0000
Maximum Liquid Volume (gal):	91,800.0893	91,800.0893	91,800.0893	91,800.0893	91,800.0893	91,800.0893	91,800.0893	91,800.0893	91,800.0893	91,800.0893	91,800.0893	91,800.0893
Maximum Liquid Height (ft):	25.0000	25.0000	25.0000	25.0000	25.0000	25.0000	25.0000	25.0000	25.0000	25.0000	25.0000	25.0000
Tank Diameter (ft):	25.0000	25.0000	25.0000	25.0000	25.0000	25.0000	25.0000	25.0000	25.0000	25.0000	25.0000	25.0000
Working Loss Product Factor:	1.0000	1.0000	1.0000	1.0000	1.0000	1.0000	1.0000	1.0000	1.0000	1.0000	1.0000	1.0000
Total Losses (lb):	1,092.1659	1,204.2001	1,516.7764	1,891.9285	2,317.6671	2,596.5776	2,860.3595	2,628.5501	2,086.5799	1,705.4762	1,282.1273	1,099.4895

TANKS 4.0.9d
Emissions Report - Detail Format
Individual Tank Emission Totals

Emissions Report for: January, February, March, April, May, June, July, August, September, October, November, December

203-T-0033 - Vertical Fixed Roof Tank
Belfield, North Dakota

	Losses(lbs)		
Components	Working Loss	Breathing Loss	Total Emissions
Gasoline (RVP 10)	13,922.17	8,359.72	22,281.90

TANKS 4.0.9d
Emissions Report - Detail Format
Tank Indentification and Physical Characteristics

Identification

User Identification:	203-T-0034
City:	Belfield
State:	North Dakota
Company:	Meridian
Type of Tank:	Vertical Fixed Roof Tank
Description:	Heavy Slop

Tank Dimensions

Shell Height (ft):	30.00
Diameter (ft):	25.00
Liquid Height (ft) :	25.00
Avg. Liquid Height (ft):	9.00
Volume (gallons):	91,800.09
Turnovers:	22.96
Net Throughput(gal/yr):	2,107,875.00
Is Tank Heated (y/n):	N

Paint Characteristics

Shell Color/Shade:	Gray/Light
Shell Condition	Good
Roof Color/Shade:	Gray/Light
Roof Condition:	Good

Roof Characteristics

Type:	Cone
Height (ft)	2.00
Slope (ft/ft) (Cone Roof)	0.16

Breather Vent Settings

Vacuum Settings (psig):	-0.03
Pressure Settings (psig)	0.03

Meterological Data used in Emissions Calculations: Bismarck, North Dakota (Avg Atmospheric Pressure = 13.86 psia)

TANKS 4.0.9d
Emissions Report - Detail Format
Liquid Contents of Storage Tank

203-T-0034 - Vertical Fixed Roof Tank
Belfield, North Dakota

Mixture/Component	Month	Daily Liquid Surf. Temperature (deg F) Avg.	Min.	Max.	Liquid Bulk Temp (deg F)	Vapor Pressure (psia) Avg.	Min.	Max.	Vapor Mol. Weight.	Liquid Mass Fract.	Vapor Mass Fract.	Mol. Weight	Basis for Vapor Pressure Calculations
Distillate fuel oil no. 2	All	48.29	39.09	57.50	43.84	0.0043	0.0031	0.0060	130.0000			188.00	Option 1: VP40 = .0031 VP50 = .0045

TANKS 4.0.9d
Emissions Report - Detail Format
Detail Calculations (AP-42)

203-T-0034 - Vertical Fixed Roof Tank
Belfield, North Dakota

Annual Emission Calcaulations	
Standing Losses (lb):	26.8510
Vapor Space Volume (cu ft):	10,635.6001
Vapor Density (lb/cu ft):	0.0001
Vapor Space Expansion Factor:	0.0684
Vented Vapor Saturation Factor:	0.9951
Tank Vapor Space Volume:	
Vapor Space Volume (cu ft):	10,635.6001
Tank Diameter (ft):	25.0000
Vapor Space Outage (ft):	21.6667
Tank Shell Height (ft):	30.0000
Average Liquid Height (ft):	9.0000
Roof Outage (ft):	0.6667
Roof Outage (Cone Roof)	
Roof Outage (ft):	0.6667
Roof Height (ft):	2.0000
Roof Slope (ft/ft):	0.1600
Shell Radius (ft):	12.5000
Vapor Density	
Vapor Density (lb/cu ft):	0.0001
Vapor Molecular Weight (lb/lb-mole):	130.0000
Vapor Pressure at Daily Average Liquid Surface Temperature (psia):	0.0043
Daily Avg. Liquid Surface Temp. (deg. R):	507.9647
Daily Average Ambient Temp. (deg. F):	41.5958
Ideal Gas Constant R (psia cuft / (lb-mol-deg R)):	10.731
Liquid Bulk Temperature (deg. R):	503.5058
Tank Paint Solar Absorptance (Shell):	0.5400
Tank Paint Solar Absorptance (Roof):	0.5400
Daily Total Solar Insulation Factor (Btu/sqft day):	1,276.2450
Vapor Space Expansion Factor	
Vapor Space Expansion Factor:	0.0684
Daily Vapor Temperature Range (deg. R):	36.8348
Daily Vapor Pressure Range (psia):	0.0029
Breather Vent Press. Setting Range(psia):	0.0600
Vapor Pressure at Daily Average Liquid Surface Temperature (psia):	0.0043
Vapor Pressure at Daily Minimum Liquid Surface Temperature (psia):	0.0031
Vapor Pressure at Daily Maximum Liquid Surface Temperature (psia):	0.0060
Daily Avg. Liquid Surface Temp. (deg R):	507.9647
Daily Min. Liquid Surface Temp. (deg R):	498.7560
Daily Max. Liquid Surface Temp. (deg R):	517.1734
Daily Ambient Temp. Range (deg. R):	24.3583
Vented Vapor Saturation Factor	
Vented Vapor Saturation Factor:	0.9951
Vapor Pressure at Daily Average Liquid: Surface Temperature (psia):	0.0043
Vapor Space Outage (ft):	21.6667

Working Losses (lb):	27.8020
Vapor Molecular Weight (lb/lb-mole):	130.0000
Vapor Pressure at Daily Average Liquid Surface Temperature (psia):	0.0043
Annual Net Throughput (gal/yr.):	2,107,875.0000
Annual Turnovers:	22.9616
Turnover Factor:	1.0000
Maximum Liquid Volume (gal):	91,800.0893
Maximum Liquid Height (ft):	25.0000
Tank Diameter (ft):	25.0000
Working Loss Product Factor:	1.0000
Total Losses (lb):	54.6531

TANKS 4.0.9d
Emissions Report - Detail Format
Individual Tank Emission Totals

Emissions Report for: Annual

203-T-0034 - Vertical Fixed Roof Tank
Belfield, North Dakota

	Losses(lbs)		
Components	Working Loss	Breathing Loss	Total Emissions
Distillate fuel oil no. 2	27.80	26.85	54.65

ENGINEERING CALCULATION NOTES

vepica USA	CALCULATION NOTES	Job No: N/A	
CODE:	UNIT:	Spc. No.:	
N/A	LOCATION: N/A	Sh. 1 of 4	Rev. A

1. FLARE EMISSION

	UNITS	HC Emergency Flare (Phase 1)	Acid Flare (Phase 1)	Enclosed HC Operating Flare (Phase 1)	HC Emergency Flare (Phase 2)
Flare Mass Flow	lb/h	722,000	36,153	150,000	777,437
Flare Vol lFlow	MMSCFD	74.6	15.8	24.4	88.8
Flare MW	lb/lbmol	88.2	20.9	56	79.7
Flowing Temperature	F	382	290	120	389
Molar Flowrate	lbmol/h	8,186	1,730	2,679	9,755
Lower Heating Value	BTU/SCF	4183	441	2951	3780
	BTU/lb	18,000	8000	20000	18,000
Heat Release	MMBTU/h	12,996	289	3,000	13,994
Height	ft	150	150	50	150
Diameter	in	36	10	360	36
Discharge Velocity	ft/s	194	382.2	-	205
Heating Value (Natural Gas)	BTU/SCF	520	520	520	520
Pilots	#	3	2	12	3
Fuel Gas to Pilots/per Pilot	SCFH	100	100	100	100

1. PREMISES

- Site Conditions:
  Relative Humidity: 66 % RH
  Pressure: 0 psig
  Temperature (for efficiency): 60 °F
- Radiant Duty Heat loss: 1.5 %
- Heat Efficiency: 80 %
- Excess Air: 20 %

- Fuel Gas Composition (% mass):

Hydrogen	23.2
Methane	13.4
Ethane	27.0
Propane	17.8
Butane	18.6
	100.0

2. DISTILLATION UNIT

- Tag: 101-H-0101					- Fuel Gas:	2610.7	lb/h
- Stack Height:	127.6	ft			- Flue Gas:	66470.6	lb/h
- Stack Diameter (ID):	6' 3 1/2"		6.3	ft	- Flue Gas Temp:	787.7	°F
- Stack Area:	31.1	ft^2			- Density:	0.0296	lb/ft^3
					- Flue Gas Vel:	20.1	ft/s
- Process Duty:	57.6	MM BTU/hr					
- Duty (Heater Fuel Gas):	72.00	MM BTU/hr					
- Tag: 102-H-0201					- Fuel Gas:	2610.7	lb/h
- Stack Height:	127.6	ft			- Flue Gas:	66470.6	lb/h
- Stack Diameter (ID):	6' 3 1/2"		6.3	ft	- Flue Gas Temp:	787.7	°F
- Stack Area:	31.1	ft^2			- Density:	0.0296	lb/ft^3
					- Flue Gas Vel:	20.1	ft/s
- Process Duty:	57.6	MM BTU/hr					
- Duty (Heater Fuel Gas):	72.00	MM BTU/hr					

3. VACUUM UNIT

- Tag: 103-H-0301					- Fuel Gas:	2773.5	lb/h
- Stack Height:	125.0	ft			- Flue Gas:	70380.6	lb/h
- Stack Diameter (ID):	6' 6"		6.5	ft	- Flue Gas Temp:	600.4	°F
- Stack Area:	33.2	ft^2			- Density:	0.0349	lb/ft^3
					- Flue Gas Vel:	16.9	ft/s
- Process Duty:	65.0	MM BTU/hr					
- Duty (Heater Fuel Gas):	76.47	MM BTU/hr					
- Tag: 103-H-0302					- Fuel Gas:	2090.6	lb/h
- Stack Height:	120.0	ft			- Flue Gas:	53050.0	lb/h
- Stack Diameter (ID):	5' 1"		5.1	ft	- Flue Gas Temp:	600.1	°F
- Stack Area:	20.3	ft^2			- Density:	0.0349	lb/ft^3
					- Flue Gas Vel:	20.8	ft/s
- Process Duty:	49.0	MM BTU/hr					
- Duty (Heater Fuel Gas):	57.65	MM BTU/hr					

4. HN HDT

- Tag: 105-H-0501					- Fuel Gas:	498.5	lb/h
- Stack Height:	91.0	ft			- Flue Gas:	12195.0	lb/h
- Stack Diameter (ID):	3'		3.0	ft	- Flue Gas Temp:	787.7	°F
- Stack Area:	7.1	ft^2			- Density:	0.0296	lb/ft^3
					- Flue Gas Vel:	16.2	ft/s
- Process Duty:	11.0	MM BTU/hr					
- Duty (Heater Fuel Gas):	13.75	MM BTU/hr					

- Tag: 105-H-0502				- Fuel Gas:	589.2	lb/h
- Stack Height:	91.0	ft		- Flue Gas:	14412.8	lb/h
- Stack Diameter (ID):	3'	3.0	ft	- Flue Gas Temp:	787.7	°F
- Stack Area:	7.1	ft^2		- Density:	0.0296	lb/ft^3
				- Flue Gas Vel:	19.1	ft/s
- Process Duty:	13.0	MM BTU/hr				
- Duty (Heater Fuel Gas):	16.25	MM BTU/hr				

5. LN HDT

- Tag: 111-H-1101				- Fuel Gas:	504.0	lb/h
- Stack Height:	170.0	ft		- Flue Gas:	12328.0	lb/h
- Stack Diameter (ID):	3' 6"	3.5	ft	- Flue Gas Temp:	793.1	°F
- Stack Area:	9.6	ft^2		- Density:	0.0295	lb/ft^3
				- Flue Gas Vel:	12.1	ft/s
- Process Duty:	11.1	MM BTU/hr				
- Duty (Heater Fuel Gas):	13.90	MM BTU/hr				

6. CATALYTIC REFORMER #1

- Tag: 107-H-0701				- Fuel Gas:	3354.0	lb/h
- Stack Height:	120.0	ft		- Flue Gas:	82042.0	lb/h
- Stack Diameter (ID):	6'	6.0	ft	- Flue Gas Temp:	787.7	°F
- Stack Area:	28.3	ft^2		- Density:	0.0296	lb/ft^3
				- Flue Gas Vel:	27.2	ft/s
- Process Duty:	74.0	MM BTU/hr				
- Duty (Heater Fuel Gas):	92.50	MM BTU/hr				

7. CATALYTIC REFORMER #2

- Tag: 106-H-0601				- Fuel Gas:	1513.0	lb/h
- Stack Height:	42.0	ft		- Flue Gas:	37012.0	lb/h
- Stack Diameter (ID):	4'	4.0	ft	- Flue Gas Temp:	786.2	°F
- Stack Area:	12.6	ft^2		- Density:	0.0297	lb/ft^3
				- Flue Gas Vel:	27.5	ft/s
- Process Duty:	33.4	MM BTU/hr				
- Duty (Heater Fuel Gas):	41.73	MM BTU/hr				

8. DIESEL HDT

- Tag: 110-H-1001				- Fuel Gas:	788.0	lb/h
- Stack Height:	96.0	ft		- Flue Gas:	15342.0	lb/h
- Stack Diameter (ID):	2' 5 1/2"	2.5	ft	- Flue Gas Temp:	764.3	°F
- Stack Area:	4.7	ft^2		- Density:	0.0316	lb/ft^3
				- Flue Gas Vel:	28.4	ft/s
- Process Duty:	13.0	MM BTU/hr				
- Duty (Heater Fuel Gas):	16.25	MM BTU/hr				

9. FCC NAPHTHA HDT

- Tag: 114-H-1401				- Fuel Gas:	633.0	lb/h
- Stack Height:	91.0	ft		- Flue Gas:	15503.0	lb/h
- Stack Diameter (ID):	3'	3.0	ft	- Flue Gas Temp:	784.3	°F
- Stack Area:	7.1	ft^2		- Density:	0.0297	lb/ft^3
				- Flue Gas Vel:	20.5	ft/s
- Process Duty:	14.0	MM BTU/hr				
- Duty (Heater Fuel Gas):	17.48	MM BTU/hr				

10. FLUID CATALYTIC CRACKING (FCC)

- Tag: F-H-1 (Air Preheater)					- Fuel Gas:		lb/h
- Stack Height:		ft			- Flue Gas:		lb/h
- Stack Diameter (ID):			9.0	ft	- Flue Gas Temp:		°F
- Stack Area:	9.0	ft^2			- Density:		lb/ft^3
					- Flue Gas Vel:	###	ft/s
- Process Duty:		MM BTU/hr					
- Duty (Heater Fuel Gas):	0.00	MM BTU/hr					
- Tag: F-H-2 (CO Boiler)					- Fuel Gas:		lb/h
- Stack Height:		ft			- Flue Gas:		lb/h
- Stack Diameter (ID):			9.0	ft	- Flue Gas Temp:		°F
- Stack Area:	9.0	ft^2			- Density:		lb/ft^3
					- Flue Gas Vel:	###	ft/s
- Process Duty:		MM BTU/hr					
- Duty (Heater Fuel Gas):	0.00	MM BTU/hr					

- Tag: 112-H-1201					- Fuel Gas:	1028.0	lb/h
- Stack Height:	72.0	ft			- Flue Gas:	25145.0	lb/h
- Stack Diameter (ID):	5' 6"		5.5	ft	- Flue Gas Temp:	785.0	°F
- Stack Area:	23.8	ft^2			- Density:	0.0297	lb/ft^3
					- Flue Gas Vel:	9.9	ft/s
- Process Duty:	22.7	MM BTU/hr					
- Duty (Heater Fuel Gas):	28.35	MM BTU/hr					

11. ALKYLATION UNIT

- Tag: 118-H-1801					- Fuel Gas:	1178.4	lb/h
- Stack Height:	95.0	ft			- Flue Gas:	30004.1	lb/h
- Stack Diameter (ID):	4'		4.0	ft	- Flue Gas Temp:	785.5	°F
- Stack Area:	12.6	ft^2			- Density:	0.0296	lb/ft^3
					- Flue Gas Vel:	22.4	ft/s
- Process Duty:	67.4	MM BTU/hr					
- Duty (Heater Fuel Gas):	84.19	MM BTU/hr					

12. ISOMERIZATION UNIT

- Tag: 117-H-1701					- Fuel Gas:	59.8	lb/h
- Stack Height:	36.0	ft			- Flue Gas:	1463.0	lb/h
- Stack Diameter (ID):	2' 8"		2.7	ft	- Flue Gas Temp:	823.8	°F
- Stack Area:	5.6	ft^2			- Density:	0.0286	lb/ft^3
					- Flue Gas Vel:	2.5	ft/s
- Process Duty:	1.3	MM BTU/hr					
- Duty (Heater Fuel Gas):	1.65	MM BTU/hr					
- Tag: 117-H-1702					- Fuel Gas:	136.0	lb/h
- Stack Height:	46.0	ft			- Flue Gas:	3326.0	lb/h
- Stack Diameter (ID):	4' 7"		4.6	ft	- Flue Gas Temp:	787.7	°F
- Stack Area:	16.5	ft^2			- Density:	0.0296	lb/ft^3
					- Flue Gas Vel:	1.9	ft/s
- Process Duty:	3.0	MM BTU/hr					
- Duty (Heater Fuel Gas):	3.75	MM BTU/hr					

13. Kerosene HDT

- Tag: 125-H-2501				- Fuel Gas:	607.0	lb/h
- Stack Height:	96.0	ft		- Flue Gas:	11802.0	lb/h
- Stack Diameter (ID):	2' 5 1/2"	2.5	ft	- Flue Gas Temp:	764.3	°F
- Stack Area:	4.7	ft^2		- Density:	0.0316	lb/ft^3
				- Flue Gas Vel:	21.9	ft/s
- Process Duty:	10.0	MM BTU/hr				
- Duty (Heater Fuel Gas):	12.50	MM BTU/hr				

vepica USA	CALCULATION NOTES		Job No: N/A	
CODE:	UNIT:	Boiler	Spc. No.:	
N/A	LOCATION: N/A		Sh. 1 of 1	Rev. D

Boiler

- Site Conditions:
  - Relative Humidity: 66 % RH
  - Pressure: 0 psig
  - Temperature (for efficiency): 60 °F
- Radiant Duty Heat loss: 1.5 %
- Heat Efficiency: 93 %
- Excess Air: 12 %

-Boiler Capacity
100,100 lb/h

- Fuel Gas Composition (% mass):

Hydrogen	23.2
Methane	13.4
Ethane	27.0
Propane	17.8
Butane	18.6
	100.0

- Tag: Boiler 1
- Stack Height: 100.0 ft
- Stack Diameter (ID): 36" 3.0 ft
- Stack Area: 7.1 ft^2

- Process Duty: 117.7 MM BTU/hr
- Duty (Heater Fuel Gas): 126.54 MM BTU/hr

- Fuel Gas: 4599.2 lb/h
- Flue Gas: 117099.0 lb/h
- Flue Gas Temp: 294.2 °F
- Density: 0.0490 lb/ft^3
- Flue Gas Vel: 93.9 ft/s

Exhibit C: Controls Technology Review

VEPICA CODE :	P-5715043-01-001-18035-I001	**SHEET** 1 **OF** 26
COMPANY CODE:	TBD	
TITLE:	EMISSIONS INVENTORY – CONTROLS TECHNOLOGY REVIEW	

PROJECT Nº: P-5715043

NAME: PERMITTING SUPPORT – DAVIS REFINERY

CLIENT: MERIDIAN ENERGY GROUP INC.

LOCATION: BILLINGS COUNTY, NORTH DAKOTA

0	9/21/16	ISSUED FOR PTC	E. MARTINEZ (Zia) J. SOLANO	A. PENA-ISEA	C. GARCÍA	T.JOHNSON
ISSUE	**DATE**	**DESCRIPTION**	**PREPARED**	**REVIEWED**	**APPROVED VEPICA**	**APPROVED CLIENT**

INDEX

DESCRIPTION **SHEET**

1. INTRODUCTION 3
   1.1. Document Scope 3
   1.2. Methodology 3
2. SUMMARY OF CONTROLLED AND UNCONTROLLED EMISSIONS 5
3. IDENTIFICATION OF APPLICABLE CONTROL TECHNOLOGIES 9
   3.1. Summary of Proposed Controls 23
4. REFERENCES 25

1. INTRODUCTION

Meridian Energy Group (MEG) has engaged VEPICA to develop an air permit application for construction of the 55,000 BPD (barrels per day) oil Davis Refinery in Billings County, North Dakota.

Based on the estimated emissions for the facility, the source qualifies as a synthetic minor source under North Dakota Air Quality regulations. As such, formal Best Available Control Technology (BACT) analysis is not applicable for the permitting of the facility. However, this Controls Technology Review generally follows BACT methods for identification of proposed controls. It should be noted that control requirements for a large portion of the air emissions sources for the Davis Refinery plant are specified by EPA regulation under New Source Performance Standards (NSPS), applicable Maximum Achievable Control Technology (MACT) and National Emission Standards for Hazardous Air Pollutants (NESHAP) regulations and/or other applicable regulations.

Final emissions control technologies, control efficiencies, and emissions limits will be specified in permit issued by NDDoH for the Davis Refinery. Upon commencement of operation, Meridian will be required to show compliance with these specified limits and controls and will implement required sampling and reporting to show compliance with permit limits.

1.1. Document Scope

This Control Technologies Review includes a descriptive analysis of the most technologically feasible air pollution control equipment to be considered in the design of Davis Refinery. The determination of which specific technology qualifies and is finally selected as the applicable control to implement is made on a case-by-case basis for each pollutant for each emission unit.

Control selection to be implemented in the facilities design was made under the premise of its technical feasibility and the level of control that can reasonably be expected to be achieved in order to maintain emissions levels of the proposed Davis Refinery at synthetic minor source status. Since formal BACT analysis is not required, analysis for energy, environment and economic impacts was not conducted for proposed emission controls.

1.2. Methodology

While BACT analysis is not specifically required for the proposed Davis Refinery since it qualifies as a minor synthetic source, the methods used for emissions control technology selection have generally followed a BACT analysis approach.

EPA's 1990 Draft Edition of the New Source Review Workshop Manual (NSR Manual) sets forth a standardized procedure for determining BACT. This is the method used by most permitting agencies in the U.S. for compliance analysis. This method is considered to be a "top-down" approach and consists of the following five steps:

1. Identify all control technologies
2. Eliminate technically infeasible options
3. Rank remaining control technologies by control effectiveness
4. Evaluate most effective controls and document results
5. Select BACT

BACT is based primarily on control effectiveness. If a technology providing lesser control is to be utilized, it must be demonstrated that, based on energy, environmental and economic impacts and other costs, it is the best choice.

As previously noted, since formal BACT analysis is not required due to the facility qualifying as a synthetic minor source, analysis for technical feasibility was only cursorily conducted by review of the U.S. EPA RACT/MACT/LAER Clearinghouse database as well as applicable permits from other facilities. In addition, coordination with equipment vendors and suppliers was undertaken for many of the emissions units to obtain project and emissions unit specific guarantees for proposed emissions rates. Analysis of energy, environment and economic impacts was not conducted for the proposed controls since in essentially all instances, the higher level of control available was the one selected.

2. SUMMARY OF CONTROLLED AND UNCONTROLLED EMISSIONS

The inventory of emissions for the identified routine (non-emergency) emissions sources for the proposed Davis Refinery for both, the base case (uncontrolled) and post controls (controlled), are summarized in Tables 1 and 2, respectively for the Primary Operating Scenario (full project build-out) and the controlled emissions for the Alternative Operating Scenario are shown in Table 3. Controlled emission detailed calculations are included in the Emissions Inventory (Exhibit B of the permit application).

Table 1. Davis Refinery Summary of Uncontrolled Emissions

	Criteria Pollutants										HAPs
Emissions Unit	CO	Pb	PM<10	Filerable PM <10	PM <2.5	Filterable PM <2.5	Condensable PM	NO_X (as NO_2)	SO_2	VOC	Total HAPs
Leaks	0.00	0.00	0.00	0.00	0.00	0.00	0.00	0.00	0.00	243.72	40.35
Tanks	0.00	0.00	0.00	0.00	0.00	0.00	0.00	0.00	0.00	21.79	14.95
Stationary Combustion Sources	91.42	1.60E-03	13.06	3.26	13.06	3.26	9.79	97.95	1.92	17.61	6.41
Fluid Catalytic Cracking Unit	0.00	2.03E-03	50.14	33.16	45.65	28.67	16.98	186.28	664.88	577.20	5.39
Catalytic Reforming Unit	0.00	0.00	0.00	0.00	0.00	0.00	0.00	0.00	0.00	0.04	0.79
Sulfur Recovery Plant	2.15	0.00	0.00	0.00	0.00	0.00	0.00	0.47	0.20	1.50	0.00
Vacuum Systems	0.00	0.00	0.00	0.00	0.00	0.00	0.00	0.00	0.00	0.00	0.00
Blowdown System	0.83	0.00	0.01	0.01	0.01	0.01	0.00	3.66	5.20	0.15	0.00
Flares	0.25	4.38E-06	0.04	0.01	0.04	0.01	0.03	0.27	0.005	0.05	0.00
Wastewater	0.00	0.00	0.00	0.00	0.00	0.00	0.00	0.00	0.00	210.41	23.28
Cooling Towers	0.00	0.00	24.83	0.00	0.00	0.00	0.00	0.00	0.00	4.73	0.00
Rail Product Loading	0.00	0.00	0.00	0.00	0.00	0.00	0.00	0.00	0.00	1,713.49	0.00
Truck Product Loading	0.00	0.00	0.00	0.00	0.00	0.00	0.00	0.00	0.00	366.76	0.00
Fugitive Dust	0.00	0.00	1.33	0.00	0.00	0.00	0.00	0.00	0.00	0.00	0.00
Total STPY	**94.65**	**0.004**	**89.40**	**36.44**	**58.75**	**31.95**	**26.80**	**288.62**	**672.20**	**3,157.45**	**91.17**

Taken from Exhibit B- EMISSIONS INVENTORY FOR DAVIS REFINERY. VEPICA, 2016. Doc. N° P-5715043-01-001-18042-I001.

Table 2: Davis Refinery Summary of Controlled Emissions – Primary Operating Scenario

	Criteria Pollutants										HAPs
Emissions Unit	CO	Pb	PM<10	Filerable PM <10	PM <2.5	Filterable PM <2.5	Condensable PM	NO_X (as NO_2)	SO_2	VOC	Total HAPs
Leaks	0.00	0.00	0.00	0.00	0.00	0.00	0.00	0.00	0.00	21.06	2.39
Tanks	0.00	0.00	0.00	0.00	0.00	0.00	0.00	0.00	0.00	9.17	4.48
Stationary Combustion Sources	91.42	1.60E-03	8.00	2.00	8.00	2.00	6.00	46.40	1.92	17.61	1.62
Fluid Catalytic Cracking Unit	0.00	2.03E-05	1.00	0.66	0.91	0.57	0.34	3.73	6.65	5.77	0.87
Catalytic Reforming Unit	0.00	0.00	0.00	0.00	0.00	0.00	0.00	0.00	0.00	0.04	0.79
Sulfur Recovery Plant	2.15	0.00	0.00	0.00	0.00	0.00	0.00	0.47	0.20	1.50	0.00
Vacuum Systems	0.00	0.00	0.00	0.00	0.00	0.00	0.00	0.00	0.00	0.00	0.00
Blowdown System	0.83	0.00	0.01	0.01	0.01	0.01	0.00	3.66	5.20	0.15	0.00
Flares	0.25	4.38E-06	0.04	0.01	0.04	0.01	0.03	0.27	0.005	0.05	0.00
Wastewater	0.00	0.00	0.00	0.00	0.00	0.00	0.00	0.00	0.00	10.52	0.52
Cooling Towers	0.00	0.00	1.86	0.00	0.00	0.00	0.00	0.00	0.00	0.35	0.00
Rail Product Loading	0.00	0.00	0.00	0.00	0.00	0.00	0.00	0.00	0.00	2.81	0.00
Truck Product Loading	0.00	0.00	0.00	0.00	0.00	0.00	0.00	0.00	0.00	0.73	0.00
Fugitive Dust	0.00	0.00	1.33	0.00	5.65E-04	0.00	0.00	0.00	0.00	0.00	0.00
Total STPY	**94.65**	**1.62E-03**	**12.24**	**2.68**	**8.96**	**2.59**	**6.37**	**54.53**	**13.97**	**69.78**	**10.67**

Taken from Exhibit B- EMISSIONS INVENTORY FOR DAVIS REFINERY. VEPICA, 2016. Doc. N° P-5715043-01-001-18042-I001.

Table 3: Davis Refinery Summary of Controlled Emissions – Alternative Operating Scenario, Phase I

	Criteria Pollutants										HAPs
Emissions Unit	CO	Pb	PM<10	Filerable PM <10	PM <2.5	Filterable PM <2.5	Condensable PM	NO_X (as NO_2)	SO_2	VOC	Total HAPs
Leaks	0.00	0.0000	0.00	0.00	0.00	0.00	0.00	0.00	0.00	7.24	0.37
Tanks	0.00	0.0000	0.00	0.00	0.00	0.00	0.00	0.00	0.00	6.32	2.24
Stationary Combustion Sources	33.82	0.0006	4.83	1.21	4.83	1.21	3.62	36.23	0.71	6.51	0.60
Fluid Catalytic Cracking Unit	0.00	0.0000	0.00	0.00	0.00	0.00	0.00	0.00	0.00	0.00	0.00
Catalytic Reforming Unit	0.00	0.0000	0.00	0.00	0.00	0.00	0.00	0.00	0.00	0.03	0.55
Sulfur Recovery Plant	2.15	0.0000	0.00	0.00	0.00	0.00	0.00	0.47	0.20	0.64	0.00
Vacuum Systems	0.00	0.0000	0.00	0.00	0.00	0.00	0.00	0.00	0.00	0.00	0.00
Blowdown System	0.41	0.0000	0.00	0.00	0.00	0.00	0.00	1.83	2.60	0.08	0.00
Flares	0.21	3.72E-06	0.03	0.01	0.03	0.01	0.02	0.23	0.004	0.04	0.00
Wastewater	0.00	0.0000	0.00	0.00	0.00	0.00	0.00	0.00	0.00	5.23	0.26
Cooling Towers	0.00	0.0000	0.93	0.00	0.00	0.00	0.00	0.00	0.00	0.18	0.00
Rail Product Loading	0.00	0.0000	0.00	0.00	0.00	0.00	0.00	0.00	0.00	1.17	0.00
Truck Product Loading	0.00	0.0000	0.00	0.00	0.00	0.00	0.00	0.00	0.00	0.28	0.00
Fugitive Dust	0.00	0.0000	0.00	0.00	3.13E-04	0.00	0.00	0.00	0.00	0.00	0.00
Total STPY	**36.59**	**0.0006**	**5.80**	**1.22**	**4.86**	**1.22**	**3.65**	**38.76**	**3.51**	**27.72**	**4.01**

3. IDENTIFICATION OF APPLICABLE CONTROL TECHNOLOGIES

Analysis of technical feasibility was generally conducted by review of the U.S. EPA RACT/BACT/LAER Clearing House Databases, EPA guidance documents and general industry literature for each applicable pollutant source. In addition, coordination with equipment vendors and suppliers was undertaken for many of the emissions units to obtain project and emissions unit specific guidance on control implementation as well as guarantees for proposed emissions rates. Based on this review, identification of technically feasible controls and related typical emissions levels was identified. Literature sources are identified by note and references are included in Section 5 of this document

A list of feasible control technologies considered for implementation for each source category and for each applicable pollutant is presented in Tables 4a-4k. Where proposed controls can address multiple pollutants, discussion has been combined to reduce repetitiveness.

Table 4a: Davis Refinery – Summary of Air Pollution Control Technology Analysis by Source Category
Leaks (Fugitive Emissions)

Technically Feasible Control Options	Identified Control Efficiency Ranges	Identified Emissions Ranges	Control Efficiency Used	Controlled Emission Factor Used
VOC's				
Applicable Feasible Technologies		**Selected Technologies – vapor recovery w/ enhanced LDAR (DIAL & OGI) initiated at 500 ppm detection**		
1.0 Gas collection manifold systems (vapor recovery). 2.0 Enhanced valve packing. 3.0 Low threshold on leak detection and repair detection down to 500 ppm. 4.0 LDAR (Leak, Detection and Repair) program with differential light absorption and ranging (DIAL) or optical gas imaging (OGI) technology.	1.0 95% \a 2.0 Inherent in process design 3.0 Inherent in LDAR system design 4.0 97% (valves), 93% pumps, 97% flanges, 97% open ended lines & sample points, (30% heavies) \b, \e	Specified by MACT and 40 CFR 63 Subpart CC, 40 CFR 60 Subpart GGG \c, \d	97% (valves), 93% pumps, 97% flanges, 97% open ended lines & sample points, (30% heavies) \b	500 ppm \d (per MACT std)

\a EPA Notification, [G.S.R 186(E), dt. 18th March, 2008]
\b TCEQ – Control Efficiencies for TCEQ Leak Detection and Repair Programs Revised 07/11 (APDG 6129v2)
\c RACT/BACT/LAER Clearinghouse for Petroleum Refining Equipment Fugitive Leaks
\d 40 CFR 63, Subpart CC & 40 CFR 60, Subpart GGG
\e EPA, Leak Detection and Repair – A Best Practices Guide, EPA-305-D-07-001 October 2007

The controls condition for addressing leaks across the refinery is structured around an aggressive LDAR program. In addition, the base condition for this project is that this is a new facility and thus piping and systems are designed to minimize potential for leaks, packing is new, as well as to allow for easy monitoring through LDAR. In addition sample ports are designed into the systems to eliminate open ended lines. Based on EPA Guidance Document, Leak Detection and Repair – A Best Practices Guide (2007), average control effectiveness of a well implemented LDAR program is over 80% across all areas of the plant with the majority of the plant exceeding 90% control efficiencies for VOC reductions. As shown in the calculation of the facility emissions, the average control efficiency across all areas of the plant that we are proposing is approximately 73% (see Emissions Inventory, Exhibit B). LDAR program will utilize optical sensors which will identify leaks well below 100 ppm, will be confirmed by Method 21 test immediately upon identification by optical meter and will require immediate repair. Optical sensing as well as repair when required will be ongoing and continuous throughout the plant.

Table 4b: Davis Refinery – Summary of Applicable Air Pollution Control Technologies by Source Category Tanks

Technically Feasible Control Options	Identified Control Efficiency Ranges	Identified Emissions Ranges	Control Efficiency Used	Controlled Emission Factor Used
VOC's / HAPs				
Applicable Feasible Technologies		**Selected Technologies – Double seal and wipers (NESHAP std) and Vapor Recovery System**		
1.0 Double Seal and Wipers (part of NESHAP std) 2.0 Vapor Recovery System to Product Recovery	1.0/2.0 (combined) 95 - 98% \a, \b	Limits specified by NESHAP and RACT	95% \a	Calculated using EPA TANKS for each tank unit
\a Control Techniques Guidelines for the Oil and Natural Gas Industry (Draft, 2015) \b 40 CFR 63, Subpart CC & 40 CFR 60, Subpart GGG				

Control requirements and control effectiveness for tanks are specified by 40 CFR Part 60 NSPS as well as by 40 CFR Part 61 and 63 (NESHAP). However, through system design, vapor recovery will be rerouted back to product instead of to flare systems.

Table 4c: Davis Refinery – Summary of Applicable Air Pollution Control Technologies by Source Category
Stationary Sources (Process Heaters and Boilers)

Technically Feasible Control Options	Identified Control Efficiency Ranges	Identified Emissions Ranges	Control Efficiency Used	Controlled Emission Factor Used
CO				
Applicable Feasible Technologies		**Selected Technologies – Good Combustion Practices w/ Low NOx Burners**		
1.0 Regenerative Thermal Or Catalytic Oxidation 2.0 Low NOx Burner 3.0 Good Combustion Practices 4.0 Good Combustion Practices with Low NOx Burner	1.0 75 – 95% \a 2.0 25 - 75% \a 3.0 Base Case 4.0 96 – 99% \b, \c	1.0 0.008 lb/MMbtu 2.0 0.04 lb/MMbtu 3.0 0.08 lb/MMbtu 4.0 0.02 – 0.06 lb/MMbtu	NA	0.028 lb/MMbtu
\a Control Techniques Guidelines for the Oil and Natural Gas Industry (Draft, 2015) \b RACT/BACT/LAER Clearinghouse for Natural Gas Combustion \c The Costs and Benefits of Selective Catalytic Reduction on Cement Kilns for Multi-Pollutant Control (A. Armendariz, 2008)				
NOx				
Applicable Feasible Technologies		**Selected Technologies – SCR w/ Low NOx Burners**		
1.0 SCR w Low NOx Burners 2.0 Low NOx Burners 3.0 SCR's 4.0 SNCR's	1.0 70 – 90% \a 2.0 70 – 90% \a 3.0 70 – 90% \a 4.0 30 – 50% \a	1.0 0.012 – 0.03 lb/MMbtu \c 2.0 0.03 – 0.04 lb/MMbtu 3.0 0.02 – 0.03 lb/MMbtu 4.0 0.04 – 0.09 lb/MMbtu	79% \d	1.0 0.0063 lb/MMbtu 2.0 0.03 lb/MMBTU
\a Control Techniques Guidelines for the Oil and Natural Gas Industry (Draft, 2015) \b RACT/BACT/LAER Clearinghouse for Natural Gas Combustion, Heaters less than 250 MMBtu/hr \c RACT/BACT/LAER Clearinghouse & Permit for Northern Plains Grandforks Plant, Primary Reformer (2015) \d Control effectiveness and emissions levels specified by vendor/supplier guarantee				
VOCs				
Applicable Feasible Technologies		**Selected Technologies – Good Combustion Practices w/ SCR**		
Good Combustion Practices with SCR	50 – 75% \a, \c	0.005 – 0.014 lb/MMbtu \b	75%	0.0054 lb/MMbtu
\a Control Techniques Guidelines for the Oil and Natural Gas Industry (Draft, 2015) \b RACT/BACT/LAER Clearinghouse & Permit for Valero Refinery, New Orleans, LA, Hydrogen Plant, SMR Heaters (2009) \c The Costs and Benefits of SCR on Cement Kilns for Multi-Pollutant Control (A. Armendariz, 2008) (HAP destruction = VOC destruction)				

Technically Feasible Control Options		Identified Control Efficiency Ranges	Identified Emissions Ranges	Control Efficiency Used	Controlled Emission Factor Used
PMs					
Applicable Feasible Technologies			**Selected Technologies – Good Combustion Practices w/ SCR**		
1.0	Good Combustion Practices	1.0 NA	1.0 0.004 lb/MMbtu \b	1.0 NA	1. 0.004 lb/MMbtu \b
2.0	Venturi Scrubbers	2.0 70 – 99% \a	2.0 0.0012 lb/MMbtu \a	2.0 70% \a	2. 0.0012 lb/MMbtu \a
3.0	Catalytic Sorbant (Tri-Mer or equivalent)	3.0 70 – 90%	3.0 0.0012 lb/MMbtu	3.0 70% \b	
\a	EPA Air Pollution Control Fact Sheet for Venturi Scrubber, EPA-452/F-03-017				
\b	Control effectiveness and emissions levels specified by vendor/supplier guarantee				

Best management practices for CO emissions for heaters and boilers are identified within the EPA RACT/BACT/LAER Clearinghouse as good combustion practices. Meridian has received supplier guarantee for CO emissions by implementation of good combustion practices with ultra-low NOx burners. This value is 0.028 lb/MMBTU.

For NOx emissions, Meridian will implement Ultra-Low NOx burners on all units as well as SCR controls on the larger units throughout the facility. Emissions values for both scenarios are based on vendor/supplier guarantees. Emissions for ultra-low NOx burners without SCR control are guaranteed at 0.03 lb/MMBTU. Emissions for low NOx burners with SCR control are guaranteed at 0.0012 lb/MMBTU.

VOC emissions levels and control effectiveness were identified through review of EPA RACT/BACT/LAER Clearinghouse as well as through review of similar permit for hydrogen plant in Louisiana.

For particulate emissions controls, Meridian has obtained a vendor/supplier guarantee for particulate emissions rate for good combustion practices of 0.004 lb/MMBTU. Meridian proposes to further implement venturi scrubber controls on the larger heater and boiler units to further reduce particulate emissions. EPA fact sheet guidance for venturi scrubbers shows a control effectiveness of 70-99% over non-controlled emissions. Meridian is conservatively assuming a 70% control effectiveness for this in stack add on control for the larger heater and boiler units resulting in an emission rate for these units of 0.0012 lb/MMBTU. For all other units, the vendor/supplier guarantee rate of 0.004 lb/MMBTU was utilized.

Table 4d: Davis Refinery – Summary of Applicable Air Pollution Control Technologies by Source Category
Fluidized Catalytic Cracking (FCC) Regeneration Vent

Technically Feasible Control Options	Identified Control Efficiency Ranges	Identified Emissions Ranges	Control Efficiency Used	Controlled Emission Factor Used
CO – note: CO emissions controlled through Best Combustion Practices (full-burn operation) and 100% captured and recirculated through a regenerator resulting in no emissions				
NOx				
Applicable Feasible Technologies [a]		**Selected Technologies – COP-NP - Non-Platinum CO combustion promoter OR Tri-Mer Catalyst**		
1.0 SNCR, 2.0 SCR, 3.0 LoTOx, 4.0 Catalyst additives (Tri-Mer) 5.0 COP-NP - Non-Platinum CO combustion promoter	1.0 SNCR – 60 - 80% 2.0 SCR - > 90% 3.0 LoTox - >90% (with SCR) 4.0/5.0 Catalyst additives and low NOx combustion - 45-98% [b]	No significant data available	98% [b]	1.42 lb/MMbbl fresh feed
\a Utah Division of Air Quality Source Plan Review, Holly Refining Heavy Crude Processing Project, Davis County, UT (2013) \b Upper range of control is based on manufacturer commitments for both COP-NP system as well as for Tri-Mer catalyst usage				
SO_2				
Applicable Feasible Technologies		**Selected Technologies – Wet Scrubber OR Dri-Sorb**		
1.0 Control of sulfur in the FCCU feed 2.0 Wet Gas Scrubbers 3.0 Wellman-Lord Flue Gas Desulfurization Process 4.0 DeSOx Additives (Dri-Sorbant or equivalent)	1.0 90% [a] 2.0 95 – 99.9% [a, c] 3.0 No recent data [a] 4.0 97% [b]	25 ppmvd@ 0% O_2 1-yr avg 50 ppmvd@ 0% O_2 7-dy avg	99% [b]	1.52 lb/hr [b]
\a Utah Division of Air Quality Source Plan Review, Holly Refining Heavy Crude Processing Project, Davis County, UT (2013) \b Upper range of control is based on manufacturer commitments for wet scrubber \c EPA Air Pollution Control Technology Fact Sheet Spray-Chamber/ Spray Tower Wet Scrubber (control effectiveness for SOx 80-99+%				
PM – since wet scrubber is used for SO_2 control, PM emissions are controlled to de-minimis levels **VOC/HAPs – controlled to de-minimis levels through best combustion practices and flue gas capture to regenerator**				

For CO emissions, Meridian is designing the FCCU with a hot burn regenerator which captures the exhaust and recirculates it through a regenerator system. This has been shown to be a best combustion practice that is essentially 100% effective in reduction of CO emissions from the exhaust.

For NOx emissions controls, Meridian has worked with the manufacturer to implement a COP-NP - Non-Platinum CO combustion promoter or Tri-Mer catalyst. Manufacturer control effectiveness of this approach is guaranteed as 1.42 lb/MMbbl. It should be noted that the FCCU will not be installed as part of the initial Phase I construction.

For SO2 emissions controls, a wet scrubber system will be installed to reduce SO2 emissions to minimal levels. Based on EPA Fact Sheet as well as review of permit support documents for Holly Refining in Utah, Meridian anticipates a removal efficiency of at least 99% for SO2. The FCCU licensor guarantee will result in a maximum emission rate of 1.52 lb/hr.

Table 4e: Davis Refinery – Summary of Applicable Air Pollution Control Technologies by Source Category
Sulfur Recovery Plant

Technically Feasible Control Options	Identified Control Efficiency Ranges	Identified Emissions Ranges	Control Efficiency Used	Controlled Emission Factor Used
SO_2				
Applicable Feasible Technologies [a]		**Selected Technologies – LO-CAT with vent gases routed to thermal oxidizer**		
1.0 Claus 2 Stages 2.0 Claus 3 Stages 3.0 Claus 4 Stages 4.0 LO-CAT with/ Tail Gas Treatment	1. 93.5% for SO_2 2. 95.5% for SO_2 3. 96.5% for SO_2 4. >98.5% for H_2S in LO-CAT vent[a] which translates to >99.9% for SO_2 from thermal oxidizer[b]	1. 278 lb/ton of sulfur product 2. 188 lb/ton of sulfur product 3. 145 lb/ton of sulfur product 4. 4 lb/ton of sulfur product	99.9%[b]	1.15 ppm
\a Texas Commission on Environmental Quality, Federal Operating Permit, Wasson CO2 Recovery Plant, Yoakum County, TX (2015) \b RACT/BACT/LAER Clearinghouse & Permit for Venoco-Ellwood Onshore Facility, Thermal Oxidizer (LO-CAT oxidation air) (2011)				

Meridian will implement a LO-CAT system with vent gas from the LO-CAT system then routed to a thermal oxidizer. This effectively reduces SO2 emissions to minimal levels. This is identified as BACT by TCEQ and EPA RACT/BACT/LAER Clearinghouse for similar applications. Claus technology although effective at capacities starting at 25 LTPY, will not be effective for the sulfur content loading expected in the Bakken feed. Mass balance calculations for the full capacity refinery indicate an annual production of around 10 LTPY.

Table 4f: Davis Refinery – Summary of Applicable Air Pollution Control Technologies by Source Category
Blowdown System

Technically Feasible Control Options	Identified Control Efficiency Ranges	Identified Emissions Ranges	Control Efficiency Used	Controlled Emission Factor Used
All Emissions				
Applicable Feasible Technologies [\a]		**Selected Technologies – Vapor Recovery to product capture w/ emergency flaring during upset only**		
1.0 Uncontrolled 2.0 Vapor Recovery to flare 3.0 Vapor Recovery to product capture w/ emergency flaring during upset only	1.0 Base case 2.0 99.8% 3.0 Up to 100%	1.0 0.586 lb/MMbtu (VOC) 2.0 0.0012 lb/MMbtu (VOC) 3.0 0.0 lb/MMbtu (VOC)	99.8% [\a]	0.0008 lb/MMbtu or 1.8 lb/hr [\a]

\a Emissions Estimation Protocol for Petroleum Refineries, Version 3. Table 5.12 (RTI International, April 2015)
Note: Values in lb/MMbtu are shown for VOC only as example. Other default values for CO, NOx, SO2 are shown in Table 5.12, reference \a

Meridian will implement an aggressive vapor recovery system for the blowdown system. The captured vapors will be rerouted back into processes/product feed during normal operations. Routing of gases to flare from this unit will only ocurr for upset conditions. This approach is considered state of industry. Analysis of effectiveness of this system is discussed in detail in the referenced document (Emissions Estimation Protocol for Petroleum Refineries) which was completed under EPA contract by RTI International (2015).

Table 4g: Davis Refinery – Summary of Applicable Air Pollution Control Technologies by Source Category
Flares

Technically Feasible Control Options	Identified Control Efficiency Ranges	Identified Emissions Ranges	Control Efficiency Used	Controlled Emission Factor Used
All Emissions				
Applicable Feasible Technologies [\a]		**Selected Technologies – emergency flaring during upset only**		
Flare systems are designed with vapor recovery units to address only upset conditions under minimal hours per year operations. Flare emissions are therefore de-minimus for all pollutants.	98% + [\a]	>300 btu/scf net heating value	Per EPA & NDDoH stds	Per EPA & NDDoH stds
\a AP 42 Emission Factors, Fifth Edition, Section 13.5, Industrial Flares				

For flare systems, the primary control is to structure the facility to utilize the flares only during true upset conditions. All vapor recovery units will collect vapors and route collected materials back to processes/product feed. For this reason flare systems are anticipated to be utilized for maximum of 168 hours per year each. Flare pilots will run full time however and emissions for these pilot units have been taken into account. Flare operation and control are specified by EPA and NDDoH standards

.

Table 4h: Davis Refinery – Summary of Applicable Air Pollution Control Technologies by Source Category
Wastewater Treatment System

Technically Feasible Control Options	Identified Control Efficiency Ranges	Identified Emissions Ranges	Control Efficiency Used	Controlled Emission Factor Used
VOC / HAP				
Applicable Feasible Technologies [a]		**Selected Technologies – All technologies identified as feasible will be installed in multiple overlay to maximize controls**		
1.0 Enclosed tanks and oil/water separators with vapor recovery 2.0 VESP Unit (or equivalent) with API oil/water separators 3.0 Diffused air flotation (DAF) units	99% [a] Combined Controls	0.400 TPY [a]	95% for VOC 55% for HAPs	10.52 TPY VOC 0.52 TPY HAP
\a RACT/BACT/LAER Clearinghouse and Permit Review for Magellan Processing, LP, Corpus Christi, Terminal, TX (2015)				

For the wastewater treatment system, the primary emissions of concern are VOCs and related HAPs. Meridian will implement enclosed tank systems with vapor recovery from the tanks. In addition, waters will be run through a VESP and/or covered oil water separator and a DAF system with vapor recovery from these units to ensure a BWON compliant plant. The combination of these controls is anticipated to remove contaminants by at least 99%. However for calculation purposes, calculations were based on 95% control for VOCs and 55% control for HAPs.

Table 4i: Davis Refinery – Summary of Applicable Air Pollution Control Technologies by Source Category
Cooling Towers

Technically Feasible Control Options	Identified Control Efficiency Ranges	Identified Emissions Ranges	Control Efficiency Used	Controlled Emission Factor Used
PM10 / VOC				
Applicable Feasible Technologies [\a, \b]		**Selected Technologies – PM10 – drift eliminators. VOC's periodic monitoring of water for hydrocarbons per regs.**		
1.0 PM10 – drift eliminators [\a, \b] 2.0 VOC – periodic monitoring of flows for VOC's hydrocarbons [\a, \b]	Controls are inherent in process design for cooling tower for PM10 and are part of hydrocarbon levels monitoring of waters for VOCs.	None specifically identified	Controls are inherent in design for cooling tower for PM10 and are part water level monitoring for VOCs.	Project and site specific.
\a Emissions Estimation Protocol for Petroleum Refineries, Version 3. Table 5.12 (RTI International, April 2015)				

Cooling tower emissions and related controls are considered standard in the industry and are widely recognized as BACT.

Table 4j: Davis Refinery – Summary of Applicable Air Pollution Control Technologies by Source Category
Product Loading

Technically Feasible Control Options	Identified Control Efficiency Ranges	Identified Emissions Ranges	Control Efficiency Used	Controlled Emission Factor Used
VOC				
Applicable Feasible Technologies [\a,]		**Selected Technologies – vapor recovery to product recycle with upsets to emergency flares**		
1.0 Condensation vapor recovery systems 2.0 Thermal oxidizer VOC / HAP control with low NOx burners. 3.0 Testing of all tanker trucks for leaks 4.0 Pressurized system.	Generally 98% for new facilities [\a] per Loading Facilities MACT (40 CFR Part 63, Subpart BBBBBB)	limited to 80 milligrams [\a] of TOCs per liter of gasoline Control	98%	MACT per 40 CFR Part 63, Subpart BBBBBB
\a Emissions Estimation Protocol for Petroleum Refineries, Version 3. (RTI International, April 2015)				

Meridian will implement an aggressive vapor recovery system for the product loading systems. The captured vapors will be rerouted back into product feed. Routing of captured vapors to flaring will only ocurr for upset conditions. This approach is considered state of industry. Analysis of effectiveness of this system is discussed in detail in the referenced document (Emissions Estimation Protocol for Petroleum Refineries) which was completed under EPA contract by RTI International (2015). Maximum allowable emissions and well as controls approaches are specified by MACT standards.

Table 4k: Davis Refinery – Summary of Applicable Air Pollution Control Technologies by Source Category
Fugitive Vehicular Emissions

Technically Feasible Control Options	Identified Control Efficiency Ranges	Identified Emissions Ranges	Control Efficiency Used	Controlled Emission Factor Used
PM				
Applicable Feasible Technologies [\a,]		**Selected Technologies – Paving of areas of routine vehicle traffic. Maintain vehicle speeds to less than 15 mph**		
1.0 Paving 2.0 Speed Controls	Primary control is paving vs no paving. Base condition is paving	NA	NA	$PM_{2.5}$ - 0.00054 lb/vmt PM_{10} - 0.0022 lb/vmt Silt load = 2.15E-02
\a AP 42 Emission Factors, Fifth Edition, Volume I, Section 13.2.1. Paved Roads, Silt loading factor for limited access roads, page 13.2.1-9				

Control of fugitive area emissions from roadways and parking areas will be through paving of these areas as well as control of vehicle speeds. All routinely traveled roadway areas as well as parking lot areas will be paved. All roadways will be posted to maintain on-site speed limits to below 15 mph. Paving and speed controls are considered BACT for control of emissions from these areas
.

3.1. Summary of Proposed Controls

Since the proposed Davis Refinery is a new refinery, it has allowed Meridian to aggressively pursue emissions controls throughout the plant emissions sources. To assure the level of control required can be achieved, in order to qualify as a Synthetic Minor Source, proposed controls have been "stacked". For this reason, in several instances the facility is redefining what can be achieved as BACT and as a result, there is minimal literature available to confirm some values. In these instances we have relied on mass balance calculations, good engineering practice and speciation analysis of the airstream. Table 5 below presents an overall summary of proposed emission controls across the proposed Davis Refinery.

Table 5. Davis Refinery Summary of Proposed Emissions Controls

Source/Unit	Target Pollutant	Pollution Control Technologies Used	Assumed % Control
Leaks (Fugitive Emissions)	VOC	LDAR (Leak, Detection and Repair) program with 500 ppmv leak definition, and including differential light absorption and ranging (DIAL) or optical gas imaging (OGI) technology	97% valves, 93% pumps, 97% flanges, 97% sample points, (30% heavies). Program baseline/ screen value of 500 ppm
Tanks	VOC	Double Seal and Wipers on IFR Tanks (NESHAP std). Vapor Recovery to product recycle on select fixed roof tanks	95%
Stationary Combustion Sources (Heater and Boilers)	CO NOx VOC/HAPs PM SO2	CO – Best Comb. Practices w/ Ultra Low NOx Burners NOx – SCR's w/ Ultra Low NOx Burners VOC / HAPs – Best Comb. Practices with Ultra Low NOx Burners PM – Venturi Scrubbers on larger heaters	CO–NA vendor guarantee NOx–79% (vendor guar.) VOCs / HAPs – 75% PM - 70% (EPA Fact Sht)
FCC Regeneration Vent	CO NOx SO2	CO– Best Comb. Practices / complete carbon burn regenerator design NOx – COP-NP Combustion Promotor OR Tri-Mer SO2 – Wet Scrubber OR Dri-Sorb Catalyst	CO – 100% NOx – 98% SO_2 – 99%
Catalytic Reforming Unit	HAPs	NA – minor emissions levels	NA
Sulfur Recovery Plants	SO_2	Lo-CAT with tail gas treatment (thermal oxidizer) Other pollutants are considered minor	SO_2 - 99.9%
Blowdown System	CO NOx SO_2	Vapor recovery to product capture and emergency flaring only for upsets	99.8%
Flares	CO NOx VOC HAPs	Lower heating value of feed gases, requirements specified by EPA and NDDoH regulations. Flares will only be used during upset conditions	98% +
Wastewater Treatment System	VOC/HAPs	Covered API/CPI oil/water separators and induced/dissolved air flotation units. Equalization tanks instead of open ponds. Vapor Recovery System	VOC – 95% HAPs – 55%
Cooling Towers	PM VOC	PM10 – drift eliminators VOC – periodic monitoring of flows for VOC's hydrocarbons	Controls are inherent in design for cooling tower for PM10 and are part water level monitoring for VOCs

Source/Unit	Target Pollutant	Pollution Control Technologies Used	Assumed % Control
Product Loading	VOC	Vapor recovery to product recycle with upsets to emergency flares	98%
Fugitive (on-site vehicular) emissions	PM	Paving of areas of routine vehicle traffic. Maintain vehicle speeds to < 15 mph	$PM_{2.5}$ - 0.00054 lb/vmt PM_{10} - 0.0022 lb/vmt Silt load = 2.15E-02
Spent Catalyst	PM	De-minimus	NA – de-minimus

4. REFERENCES

- 40 CFR 63, Subpart CC & 40 CFR 60, Subpart GGG
- A. Armendariz, 2008, The Costs and Benefits of Selective Catalytic Reduction on Cement Kilns for Multi-Pollutant Control
- Barthe, P; Chaugny, M; Roudier, S & Delgado, L. 2015. Best Available Techniques (BAT) Reference Document for the Refining of Mineral Oil and Gas. JRC Science and Policy Reports
- Dunn, T.; Breen, D. 2003. Potential Control Strategies to Reduce Emissions from Refinery Wastewater Collection and Treatment Systems. California Air Resources Board and the Bay Area Air Quality Management District.
- EPA Air Pollution Control Technology Fact Sheet Spray-Chamber/ Spray Tower Wet Scrubber
- EPA Air Pollution Control Fact Sheet for Venturi Scrubber, EPA-452/F-03-017
- EPA, Leak Detection and Repair – A Best Practices Guide, EPA-305-D-07-001 October 2007
- EPA Notification, 18th March, 2008, G.S.R 186(E),
- EPA RACT/BACT/LAER Clearinghouse for Petroleum Refining Equipment Fugitive Leaks
- EPA Control Techniques Guidelines for the Oil and Natural Gas Industry (Draft, 2015)
- EPA, AP 42 Emission Factors, Fifth Edition, Section 8.13, Sulfur Recovery
- EPA, AP 42 Emission Factors, Fifth Edition, Section 13.5, Industrial Flares
- EPA, AP 42 Emission Factors, Fifth Edition, Volume I, Section 13.2.1. Paved Roads, Silt loading factor for limited access roads, page 13.2.1-9
- EPA/ RTI International, April 2015, Emissions Estimation Protocol for Petroleum Refineries, Version 3. Table 5.12
- Engineering Documentation from BASIC and Process calculations from VEPICA.
- Eastern Research Group, Inc. 1997. Preferred And Alternative Methods For Estimating Air Emissions From Wastewater Collection And Treatment. Prepared for Point Sources Committee, Emission Inventory Improvement Program, Emission Factor and Inventory Group, U.S. EPA.
- Johnson Matthey Process Technologies website: http://www.jmprotech.com/sox-reduction-johnson%20matthey-intercat).

- Mo, X.; De Graff, B.; Radcliffe C. and Diddams, P. 2014. HCN and NOx control strategies in the FCC. From www.digitalrefining.com/article/1000926.
- TCEQ – Control Efficiencies for TCEQ Leak Detection and Repair Programs Revised 07/11 (APDG 6129v2)
- Utah Division of Air Quality Source Plan Review, Permit Review for Magallen Processing, LP, Corpus Christi, Terminal, TX (2015)
- Utah Division of Air Quality Source Plan Review, Holly Refining Heavy Crude Processing Project, Davis County, UT (2013)
- VEPICA, 2016. Emissions Inventory for Davis Refinery. Document N°P-5715043-00-001-18042-I001.
- Wakefield, B. 2007. The Environmental Integrity Project. Oil Refinery Permits. A Handbook for Citizen Participation in the Permitting of Oil Refineries under the New Source Review Provisions of the Clean Air Act.

Exhibit D: Emissions Dispersion Modeling and Air Quality Impact Analysis
(submitted under separate cover)

NHOE-16-001-16-419

Summary Report of Air Dispersion Modeling Results

In Support Of An Application For
Air Contaminant Discharge Permit
Meridian Energy Group, Inc.
Davis Refinery
Billings County, North Dakota

October 2016

zia engineering & environmental consultants, llc
201 N. Church Street,
Suite 300
Las Cruces, NM 88001
Phone (505) 532-1526
Fax (505) 532-1587

SUMMARY REPORT OF AIR DISPERSION MODELING RESULTS

IN SUPPORT OF AN APPLICATION FOR
AIR CONTAMINANT DISCHARGE PERMIT
MERIDIAN ENERGY GROUP, INC.
DAVIS REFINERY
BILLINGS COUNTY, NORTH DAKOTA

Zia Project # NHOE-16-001
Document # NHOE-16-001-16-419
Submission Date: 14 October 2016

Submitted To: **North Dakota Department of Health**
Air Quality Division

On behalf of: **Vepica USA, Inc.**
2002 W Grand Parkway North, Suite 200
Katy, TX 77449

Submitted by:

zia engineering & environmental consultants, llc

201 N. Church Street, Suite 300
Las Cruces, New Mexico 88001
(575) 532-1526 voice
(575) 532-1587 fax

Author(s):

Miguel A. Martinez

Edward H. Martinez

TABLE OF CONTENTS

1.0 INTRODUCTION 5

1.1 Proposed Project 5

1.2 General Regulatory Overview 6

2.0 CRITERIA POLLUTANTS ANALYSIS REQUIREMENTS 7

3.0 CRITERIA POLLUTANT MODEL APPROACH 10

3.1 Introduction 10

3.2 Screening Analysis 10

3.3 Refined Analyses (SIL and Cumulative) 10

3.3.1 Model Selection 10
3.3.2 Emissions Inventory 11
3.3.3 Meteorological Data 13
3.3.4 Receptor Locations 13
3.3.5 Background Concentrations 15

3.4 Aermod Execution 15

3.5 Interpretation of Aermod Model Output 15

4.0 AIR TOXICS ANALYSIS 19

4.1 Davis Refinery Tier 3 Analysis 19

4.2 Air Toxics Analysis Results 20

LIST OF ATTACHMENTS

Attachment A – Electronic Files Lists and Titles

Attachment B – Air Quality Dispersion Analysis Guide

Attachment C – Emissions Sources Characteristics

Attachment D – Air Toxics Analysis Spreadsheets

LIST OF TABLES

Table 1 – Summary of NAAQS Significant Impact Levels ($\mu g/m^3$) For Preliminary Screening Analysis 7

Table 2a – Preliminary Summary of Potential to Emit – Primary Operating Scenario 8

Table 2b – Preliminary Summary of Potential to Emit – Alternative Operating Scenario 9

Table 3 – Calculation of Virtual Stack Model Characteristics 12

Table 4 – Virtual Stack Modeled Characteristics 12

Table 5 – Non-Uniform Cartesian Grid, Distance and Interval Distribution 14

Table 6 – Requested Additional Receptors 14

Table 7a – Summary of Modeled Highest Values Compared to NDDoH SILs – Primary Operating Scenario 16

Table 7b – Summary of Modeled Highest Values Compared to NDDoH SILs – Alternative Operating Scenario 16

Table 8a – Class I Areas PSD Increments and Significant Impact Levels 17
Primary Operating Scenario 17

Table 8b – Class I Areas PSD Increments and Significant Impact Levels Alternative Operating Scenario 17

Table 9a – Class II Areas PSD Increments and Significant Impact Levels Primary Operating Scenario 18

Table 9b – Class I Areas PSD Increments and Significant Impact Levels Alternative Operating Scenario 18

1.0 INTRODUCTION

1.1 PROPOSED PROJECT

Meridian Energy Group, Inc. (Meridian) has applied for a Permit to Construct (PTC) for the proposed Davis Refinery (the "Project") from the North Dakota Department of Health (NDDoH) Division of Air Quality. The Davis Refinery will be an approximately 55,000 barrels per standard day ("bpsd") high-conversion crude refinery that will produce a full slate of refined products and specialty chemicals. Meridian has initiated engineering plans and the Refinery design is based upon the availability of process equipment that will shorten the schedule and reduce costs while ensuring environmental compliance.

The project location is a 620-acre site in Billings County, North Dakota (see Figure 1 - the "Site") where Meridian has entered into an option-purchase agreement with the owner. On July 5th, 2016 the Billings County Board of Commissioners unanimously approved a rezoning permit to industrial use that will allow the construction of the Davis Refinery on this property. Figure 1 provides a map of the proposed project site and immediate area.

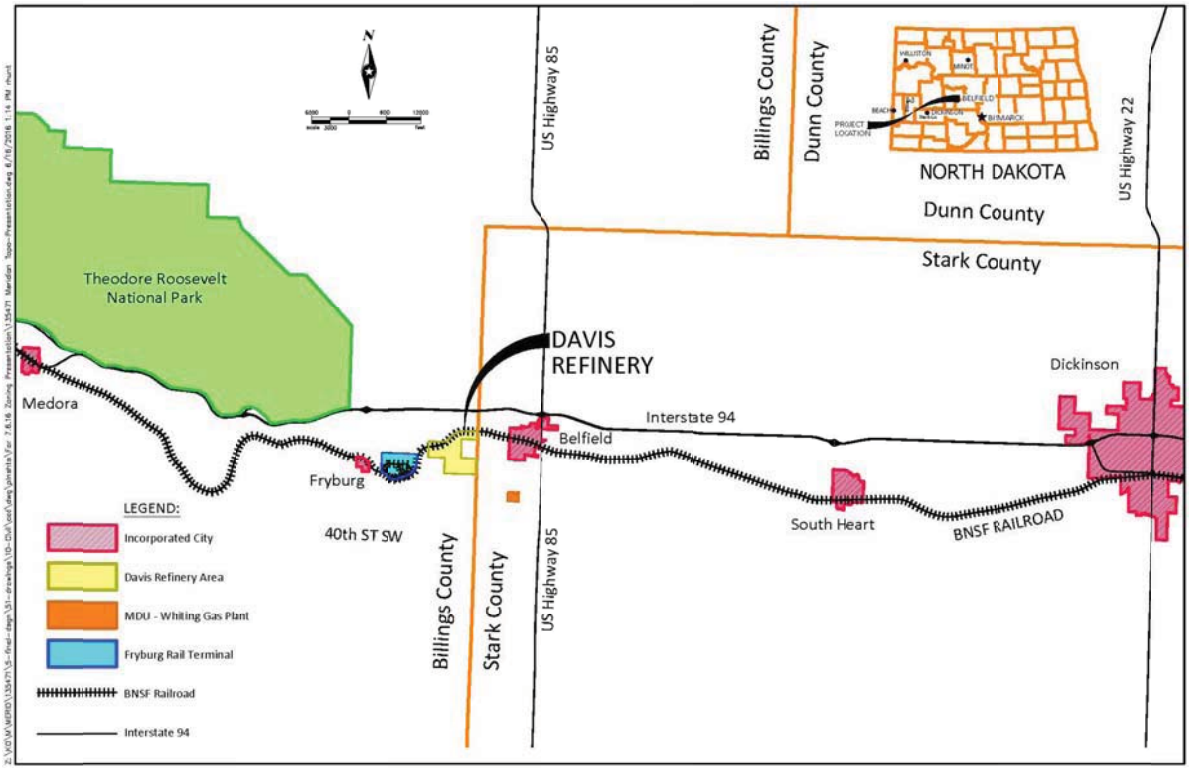

Figure 1: Proposed Site Location Davis Refinery Project, Billings County, ND

Terrain generally rises to the north and west and falls away to the south and east from the site, with the highest locations in proximity to the site being approximately 8-12 miles away and within the boundaries of the nearby Theodore Roosevelt National Park (TRNP) to the west. A review of the land use in the immediate area (3 kilometers) indicates that the subject site is in a rural, farmland area.

1.2 GENERAL REGULATORY OVERVIEW

As noted, Meridian has submitted a PTC for this project to the NDDoH in October 2016. As part of the process of obtaining a PTC and based on review of NDDoH guidance and criteria, the NDDoH is requiring air impacts modeling of the facility's potential impacts to surrounding lands. This is due to the proximity to the TRNP and the high level of public interest in the project. This "Summary Report of Model Results" describes the refined analysis that Zia Engineering and Environmental (Zia), on behalf of Meridian and their primary consultant Vepica USA, Inc. (Vepica), has performed.

The proposed subject site is located in an air attainment area for all criteria pollutants. The project triggers the new source review requirements of the NDDoH under "Designated Air Contaminant Sources Permit to Construct" rules (Chapter 33-15-14) as well as related NDDoH permitting and modeling guidance.

Included in this report is discussion of the analysis and modeling approach as well as summary discussion of results. Specifically, this document summarizes the modeling evaluation of the facility's short range (20 kilometer) air quality impacts in Class II areas as well as the preliminary analysis of impacts to the nearby Class I area (Theodore Roosevelt National Park – South Unit).

As stated in the New Source Review Workshop Manual (Draft 1990): "Class I areas are areas of special national or regional natural, scenic, recreational, or historic value for which the PSD regulations provide special protection." "One way in which air quality degradation is limited in all Class I areas is by stringent limits defined by the Class I increments for sulfur dioxides, particulate matter and nitrogen dioxide. In addition, the Federal Land Manager (FLM) of each Class I area is charged with the affirmative responsibility to protect that area's unique attributes, expressed generically as air quality related values (AQRV's)".

The proposed project location is approximately 2.5 miles southeast of the South Unit of Theodore Roosevelt National Park, a designated Class I area. Due to the close proximity of the project to the Class I area, air dispersion modeling of potential impacts to the Class I area is required by NDDoH in accordance the "Site Specific Modeling Guidance" issued for the project and dated June 20, 2016.

This model analysis has been prepared based on the NDDoH's requirements defined in the "Criteria Pollutant Modeling Requirements for a Permit to Construct" memo dated October 6, 2014 as well as the project specific NDDoH "Site Specific Modeling Guidance" issued for the project and dated June 20, 2016. Also included with the Summary Report submittal are electronic copies of all input and output files of the model analysis as well as related electronic copies of spreadsheets used to support the analysis. File name references and file titles are included as Attachment A of this document. This report includes analysis and discussion both of criteria pollutant impacts under New Source Review Standards (NSR) as well as analysis of air toxics impacts required under the NDDoH Air Toxics Policy and specifically under Section 33-15-02-04, subsection 3 of the North Dakota Air Pollution Control Rules.

2.0 CRITERIA POLLUTANTS ANALYSIS REQUIREMENTS

The NDDoH Division of Air Quality (DAQ) has primary jurisdiction for permitting and operating issues involving air quality at the subject site. As such, the Project is required to comply with the applicable sections of the NDDoH "Criteria Pollutant Modeling Requirements for a Permit to Construct" memo dated October 6, 2014 as well as the project specific NDDoH "Site Specific Modeling Guidance" issued for the project and dated June 20, 2016, as applicable. In addition, Zia prepared and submitted a "Modeling Protocol" document dated August 2016 that summarized proposed approach and methods for the modeling analysis.

The Project is a 55,000 bpd oil refinery facility. However, as shown in Table 2 and based on the proposed level of controls, the facility qualifies as a synthetic minor source. More detailed discussions of emissions estimates and facility and emissions controls is included in the PTC document and related supporting submittals. As a synthetic minor source, it does not meet PSD major source triggers for any of the criteria pollutants. However, based on its location near a Class I area, as well as the general level of public interest, the NDDoH is requiring at least screen modeling analysis for both Class I and Class II National Ambient Air Quality Standards (NAAQS) Significant Impact Levels (SILs). Shown in Table 1 is a summary of the NAAQS SILs that the facility is required to meet for preliminary screening analysis.

Initially, Class I and Class II Significant Impact Level (SIL) modeling is conducted. If the initial screen modeling passes Class I and Class II SILs, further dispersion modeling is not required. If the initial screen modeling exceeds Class I or Class II SILs, then refined dispersion modeling must be conducted for PSD increment consumption and Federal and State Ambient Air Quality Standards (AAQS).

Table 1 – Summary of NAAQS Significant Impact Levels ($\mu g/m^3$) For Preliminary Screening Analysis
Davis Refinery Project, Billings County, ND

	1-hour		3-hour		8-hour		24-hour		Annual	
Pollutant	**Class I**	**Class II**	**Class I**	**Class II**	**Class I**	**Class II**	**Class I**	**Class II**	**Class I**	**Class II**
SO_2	--	7.8	1.0	25	--	--	0.2	5	0.1	1
NO_2	--	7.5	--	--	--	--	--	--	0.1	1
PM_{10}	--	--	--	--	--	--	0.2	5	0.1	1
$PM_{2.5}$	--	--	--	--	--	--	0.07	1.2	0.06	0.3
CO		2,000	--	--	--	500	--	--	--	--

Table 2a – Preliminary Summary of Potential to Emit – Primary Operating Scenario
Davis Refinery Project, Billings County, ND

Unit	Criteria Pollutants										HAPs
	CO	Pb	PM<10	Filterable PM <10	PM <2.5	Filterable PM <2.5	Condensable PM	NOx	SO_2	VOC	Total HAP
Leaks	0.000	0.000	0.000	0.000	0.000	0.000	0.000	0.000	0.000	21.061	2.389
Tanks	0.000	0.000	0.000	0.000	0.000	0.000	0.000	0.000	0.000	9.174	4.479
Stationary Combustion Sources	91.418	0.002	8.003	2.001	8.003	2.001	6.002	46.404	1.921	17.605	1.620
Fluid Catalytic Cracking Unit	0.000	0.000	1.003	0.663	0.913	0.573	0.340	3.726	6.649	5.772	0.866
Catalytic Reforming Unit	0.000	0.000	0.000	0.000	0.000	0.000	0.000	0.000	0.000	0.043	0.793
Sulfur Recovery Plant	2.149	0.000	0.000	0.000	0.000	0.000	0.000	0.471	0.197	1.502	0.000
Vacuum Systems	0.000	0.000	0.000	0.000	0.000	0.000	0.000	0.000	0.000	0.000	0.000
Blowdown System	0.828	0.000	0.005	0.005	0.005	0.005	0.000	3.658	5.198	0.154	0.000
Flares	0.736	0.000	0.067	0.017	0.067	0.017	0.050	0.438	0.005	0.048	0.000
Wastewater	0.000	0.000	0.000	0.000	0.000	0.000	0.000	0.000	0.000	10.520	0.524
Cooling Towers	0.000	0.000	1.863	0.000	0.000	0.000	0.000	0.000	0.000	0.355	0.000
Rail Product Loading	0.000	0.000	0.000	0.000	0.000	0.000	0.000	0.000	0.000	2.809	0.000
Truck Product Loading	0.000	0.000	0.000	0.000	0.000	0.000	0.000	0.000	0.000	0.734	0.000
Fugitive Dust	0.000	0.000	1.326	0.000	0.001	0.000	0.000	0.000	0.000	0.000	0.000
Total Short Ton per Year	**95.131**	**0.002**	**12.266**	**2.686**	**8.988**	**2.596**	**6.392**	**54.697**	**13.969**	**69.776**	**10.670**

Table 2b – Preliminary Summary of Potential to Emit – Alternative Operating Scenario
Davis Refinery Project, Billings County, ND

Unit	Criteria Pollutants										HAPs
	CO	Pb	PM<10	Filterable PM <10	PM <2.5	Filterable PM <2.5	Condensable PM	NOx	SO_2	VOC	Total HAP
Leaks	0.000	0.000	0.000	0.000	0.000	0.000	0.000	0.000	0.000	7.237	0.366
Tanks	0.000	0.000	0.000	0.000	0.000	0.000	0.000	0.000	0.000	6.320	2.240
Stationary Combustion Sources	33.818	0.001	4.831	1.208	4.831	1.208	3.623	36.234	0.710	6.513	0.599
Fluid Catalytic Cracking Unit	0.000	0.000	0.000	0.000	0.000	0.000	0.000	0.000	0.000	0.000	0.000
Catalytic Reforming Unit	0.000	0.000	0.000	0.000	0.000	0.000	0.000	0.000	0.000	0.029	0.546
Sulfur Recovery Plant	2.149	0.000	0.000	0.000	0.000	0.000	0.000	0.471	0.197	0.637	0.000
Vacuum Systems	0.000	0.000	0.000	0.000	0.000	0.000	0.000	0.000	0.000	0.000	0.000
Blowdown System	0.414	0.000	0.003	0.003	0.003	0.003	0.000	1.829	2.599	0.077	0.000
Flares	0.213	0.000	0.030	0.008	0.030	0.008	0.023	0.228	0.004	0.041	0.000
Wastewater	0.000	0.000	0.000	0.000	0.000	0.000	0.000	0.000	0.000	5.234	0.261
Cooling Towers	0.000	0.000	0.932	0.000	0.000	0.000	0.000	0.000	0.000	0.177	0.000
Rail Product Loading	0.000	0.000	0.000	0.000	0.000	0.000	0.000	0.000	0.000	1.172	0.000
Truck Product Loading	0.000	0.000	0.000	0.000	0.000	0.000	0.000	0.000	0.000	0.279	0.000
Fugitive Dust	0.000	0.000	0.001	0.000	0.000	0.000	0.000	0.000	0.000	0.000	0.000
Total Short Ton per Year	**36.594**	**0.001**	**5.797**	**1.218**	**4.864**	**1.218**	**3.646**	**38.762**	**3.511**	**27.716**	**4.011**

3.0 CRITERIA POLLUTANT MODEL APPROACH

3.1 INTRODUCTION

Zia conducted the air quality modeling using applicable sections of the NDDoH "Criteria Pollutant Modeling Requirements for a Permit to Construct" memo dated October 6, 2014 as well as the project specific NDDoH "Site Specific Modeling Guidance" issued for the project and dated June 20, 2016, as applicable. In addition, Zia had previously prepared and submitted a "Modeling Protocol" document dated August 2016 that summarized proposed approach and methods for the modeling analysis. Discussion of Zia's approach is included in subsequent sections of this document and compliance with guidance criteria is structured per the NDDoH, "Air Quality Dispersion Modeling Analysis Guide" (June 21, 2013). A copy of this document is included in Attachment B.

Model analysis results are detailed in Section 3.3 of this report. These results show that preliminary screen modeling shows impacts below the identified Class I and Class II SILs. Thus, analysis approach and results are structured to support discussion of the comparison to the SILs since no further criteria pollutant modeling analysis is otherwise required.

3.2 SCREENING ANALYSIS

Based on the level of modeling required by the NDDoH as well as the anticipated heightened level of interest related to the project and it's potential impacts, screening analysis using either AERSCREEN or SCREEN3 was not conducted for this project.

3.3 REFINED ANALYSES (SIL AND CUMULATIVE)

3.3.1 Model Selection

The air dispersion model used for the screen analysis was AERMOD with the BREEZE Software graphic user interface to load the data into the applicable EPA modules. The module versions used are as follows:

- AERMOD 15181 (Recommended)
- AERMET 15181
- AERMAP 11103
- AERSURFACE 13016
- BPIPPRM 040421

The proposed refinery site will be located 2.2 miles west of Belfield, ND. The geometric mean of the battery limits for the facility is:

UTM Coordinates, WGS84 datum
13T (Northern Hemisphere)
633538.294 m E
5193515.636 m N

The proposed site was surveyed and the resulting plot plan was referenced to UTM coordinates using AUTOCAD. The model used the georeferenced plot plan to determine the coordinate of the individual sources, stacks, and points of interest.

3.3.2 Emissions Inventory

Point Source Characteristics

Included in Attachment C are the Source Characteristics with the applicable physical characteristics of the point sources modeled in this analysis.

The model used National Elevation Data (NED) data downloaded from the USGS Nation Map website to determine the elevation of the sources and receptors. The USGS returned a .TIFF file bound by the following coordinates:

- North 46.628 N -103.25 E
- South 46.628 N -103.30 E
- West 46.876 N -103.61 E
- East 46.8346 N -103.609 E

The elevation data extends 110 km by 93 km in the easterly and northern directions, respectively. The proposed NDDR site and the Theodore Roosevelt National Park (TRNP) are within the boundaries of the downloaded elevation data. The extent of the region allows the variable receptor grid to extend 25 kilometers from fence line of the site in the direction of each compass point. The data were processed with AERMAP to extract the elevation of all sources and the park receptors, as well as their hill height scale.

Source Variable Stack Characteristics

There are two operating scenarios included in the analysis for this project. The Primary Operating Scenario includes full build-out of the project at a total maximum production capacity of 55,000 bpd with all anticipated emissions units and controls included. The Alternative Operating Scenario is described as Phase I build-out of the project, which is anticipated for the first 2-3 years of operation. The Phase I operation is proposed to be approximately 27,500 BPD. Besides overall production capacity, the primary difference between the Primary Operating Scenario and the Alternative Scenario includes several units, which will not be installed until Phase II and the delay of some proposed add-on pollution controls for NOx or PM in heaters and boilers until Phase II.

Both operating scenarios were separately modeled for this analysis and results of each analysis were compared to applicable SILs. Discussion of results is included in Section 3.5.

Stack Exit Velocity Adjustments

All the stacks in the NDDR proposed site are vertical. Thus, the adjustments for horizontal or capped stacks prescribed in the AERMOD Implementation Guide (08/03/2015) were not necessary.

Flare Point Source Characteristics

The flare characteristics were calculated using the November 10, 2010 NDDoH "Model Inputs for Flare" guideline. The results of the calculations are:

Table 3 – Calculation of Virtual Stack Model Characteristics
Davis Refinery Project, Billings County, ND#

ID	FLARE	X	Y	Elevation	Flare LHV		Net Heat Release	Stack Height	Flame Length	Virtual Stack Height	Virtual Stack Diameter
				(m)	MMBTU/h	Qt(Cal/s)	Q (cal/s)	hs (m)	hf (m)	hse (m)	Ds (m)
FL1701	#1 HC Emergency Flare	63350	5193594	810.8	0.156	10920.0	4914.0	45	0.39	45.4	0.05
FL1702	#2 HC Emergency Flare	633492	5193666	809.0	0.156	10920.0	4914.0	45	0.39	45.4	0.05
FL1703	#3 Acid Flare	633495	5193666	808.9	0.104	7280.0	3276.0	45	0.32	45.3	0.04
FL1704	#4 Enclosed HC Operating Flare	633601	5193607	808.9	0.624	43680.0	19656.0	15	0.75	15.8	0.10

Source: Flare Dimension Calculations.xlsx

The virtual stack characteristics were then entered into the model, along with the recommendation of a stack velocity of 40 m/s, and a stack temperature of 1000 K.

Table 4 – Virtual Stack Modeled Characteristics
Davis Refinery Project, Billings County, ND

ID	FLARE	X	Y	Elevation	Stack Model Characteristics			
				(m)	Height (m)	Diameter (m)	Velocity (m/s)	Temperature (k)
FL1701	#1 HC Emergency Flare	63350	5193594	810.8	45.4	0.05	40	1000
FL1702	#2 HC Emergency Flare	633492	5193666	809.0	45.4	0.05	40	1000
FL1703	#3 Acid Flare	633495	5193666	808.9	45.3	0.04	40	1000
FL1704	#4 Enclosed HC Operating Flare	633601	5193607	808.9	15.8	0.10	40	1000

Source: Flare Dimension Calculations.xlsx

Area Sources

No area volume sources were modeled.

Volume Sources

No volume sources were modeled.

Building Downwash

AERMOD and BPIPPRM were used together to determine the Good Engineering Practice Stack Heights (GEP Stack) and the building downwash. BPIP calculated the building height, length, and effective building width for 36 wind directions and provided the X and Y offsets for the adjustment routines. The model also included the storage tanks for the refinery as buildings.

This enabled the model to consider the possible contribution of the storage tanks to building downwash. The model files for the BPIP analysis are as follows:

- *BPIPIN.txt*
- *BPIPOUT.txt*
- *BPIPSUMMARY.txt*

Electronic copies of these files are provided with this report.

Off Site Sources

The *ND Air Dispersion Modeling Guide* does not require the consideration of off-site sources when modeling for Significant Impact Levels (SIL) or Air Toxics.

3.3.3 Meteorological Data

Selection of Meteorological Observations

AERMET version 15181 was used to process five consecutive years of meteorological data for the period of 01/01/2009 to 12/31/2013 from the following stations:

24012 KDIK DICKINSON THEODORE ROOSEVELT R UNITED STATES NORTH DAKOTA
+46.799 -102.797 +786.4
24011 KBIS BISMARCK UNITED STATES NORTH DAKOTA
+46.774 -100.75 +506

Application of AERSURFACE to Process Land Surface Characteristics

The *AERSURFACE Input Recommendations* (09/16/2010) provided by the NDDoH were used in conjunction with AERSURFACE 13016 to generate the SURFACE and PROFILE files. The month to season assignment used was the Southwest North Dakota distribution.

The applicable and resulting files of the *AERSURFACE* program are listed below. Electronic copies of these files are provided with this report.

- *AERMET0913SFC.SFC*
- *AERMET0913PFL.PFL*
- *AERMET0913MRG.MRG*

3.3.4 Receptor Locations

Primary Receptor Network

The refinery site will be fenced at the approximate property boundary to limit public access. As such, for modeling purposes it was modeled as a closed polygon. Per direction from NDDoH guidance, fence line receptors were set apart at 25 meter intervals. The datum for the receptor intervals was placed on the geometric mean of the site. Additional grid receptors were then spaced out per the distances below up to a maximum distance of approximately 23.85 km from the property boundaries (see Table 5).

Table 5 – Non-Uniform Cartesian Grid, Distance and Interval Distribution
Davis Refinery Project, Billings County, ND

Sector	Distance (m)	Interval (m)
1	0-1500m	100
2	1500-10000	250
3	10000-18500	500
4	18500-23850	1000

Additional Receptors Requested

The NDDoH requested that additional receptors be placed in the model for the following locations:

Table 6 – Requested Additional Receptors
Davis Refinery Project, Billings County, ND

Receptor Name	X	Y	Elevation (m)
Painted Canyon Visitor Center	623269.0	5194740.0	847.91
Buckhill Trail Parking Area	622580.0	5198267.0	851.56
TRNP Amphitheater	610813.0	5196768.0	763.33
TRNP Visitor Center	612373.0	5196908.0	691.23

Source: Additional Receptors.xlsx

While individual receptors for these points were established in the model, the highest modeled impacts within the Class I area was not identified in any instance as being close to these receptors and all levels at these receptor points were identified as being significantly below the applicable Class I SIL levels. Impact levels at these specific receptors are identified in the model output files.

Nearby Sources

Per NDDoH guidelines, no nearby sources were included in the preliminary modeling for comparison to SILs. Thus, no receptors associated with nearby sources are included.

Application of AERMAP

The model used National Elevation Data (NED) data downloaded from the USGS Nation Map website to determine the elevation of the sources and receptors. The USGS returned a .TIFF file bound by the following coordinates:

- North 46.628 N -103.25 E
- South 46.628 N -103.30 E
- West 46.876 N -103.61 E
- East 46.8346 N -103.609 E

The elevation data extends 110 km by 93 km in the easterly and northern directions, respectively. The proposed NDDR site and the Theodore Roosevelt National Park (TRNP) are within the boundaries of the downloaded elevation data. The extent of the region allows the variable receptor grid to extend 25 kilometers from fence line of the site in the direction of each

compass point. The data were processed with AERMAP verseion 11103 to extract the elevation of all sources and the park receptors, as well as their hill height scale.

3.3.5 Background Concentrations

Per NDDoH modeling guidelines, the background concentration of SO_2, NO_2, PM_{10}, $PM_{2.5}$, and CO were not applicable to the Significant Impact Level (SIL) analysis for the proposed facility.

3.4 AERMOD EXECUTION

A model analysis was run for each of the criteria pollutants that have a corresponding SIL value for both Class I and Class II areas. This was done for both the primary (full production operating scenario as well as the alternative (Phase I = 27,500 bpd) scenario. The following options and assumptions were used in execution of the AERMOD model:

- Pollutant concentrations were calculated to match the frequencies of the SIL values listed in Table 1.
- Based on development on the adjacent properties and the planned use of the Project site area, the model was run using a rural option.
- Five year of representative hourly meteorological data was used (2009 – 2013). Per the Dispersion Modeling Guidelines, the MAKEMET interface was utilized in AERMET for processing of meteorological data.
- it was assumed that 80% of NO_x is converted to NO_2
- Emissions rates were assumed constant.
- Emissions for all stack locations will be modeled as point sources.
- Flare sources were modeled using AERMET flare source option in order to model as point sources.
- Building wake downwash was analyzed, as applicable, based on facility site designs using the BPIPPRM to automate the processing of terrain and building information.
- AERMOD was run using site specific terrain using AERMAP to process DEM data using obtained Geo-TIF data.

3.5 INTERPRETATION OF AERMOD MODEL OUTPUT

To identify the potential near source impacts of the project, the U.S. EPA's AERMOD dispersion model was used for modeling of project only preliminary estimates of pollutant emission rates and stack exit conditions. These results were compared to NAAQS SILs shown in Table 1. Determination of compliance with the SILs within the established receptor grid was conducted for all criteria pollutants. Since the NAAQS SILs are met for both Class I and Class II areas, then no further dispersion modeling shouldl be required. A summary of the highest modeled result for each of the SIL values is shown in Table 7a and 7b for both the primary and alternative operating scenarios, respectively. Identification of the location of each of the highest values for the Class I and Class II SIL comparisons is shown in Tables 8 and 9.

Table 7a – Summary of Modeled Highest Values Compared to NDDoH SILs – Primary Operating Scenario
Davis Refinery Project, Billings County, ND

	1-Hour				3-Hour				8-Hour				24-Hour				Annual			
	Limits		Results		Limits		Results		Limits		Results		Limits		Results		Limits		Results	
Pollutant	Class I	Class II	Class I	Class II	Class I	Class II	Class I	Class II	Class I	Class II	Class I	Class II	Class I	Class II	Class I	Class II	Class I	Class II	Class I	Class II
SO2	-	7.8	-	2.17	1.0	25	0.635	1.06	-	-	-	-	0.2	5	0.142	0.469	0.1	1	0.005	0.028
NO2	-	7.5	-	7.1	-	-	-	-	-	-	-	-	-	-	-	-	0.1	1	0.025	0.287
PM10	-	-	-		-	-	-	-	-	-	-	-	0.2	5	0.025	0.638	0.2	1	0.006	0.064
PM2.5	-	-	-	-	-	-	-	-	-	-	-		0.07	1.2	0.047	0.168	0.06	0.3	0.002	0.017
CO	-	2000	-	2.17	-	-	-	-	-	500	-	0.65	-	-	-	-	-	-	-	-

Table 7b – Summary of Modeled Highest Values Compared to NDDoH SILs – Alternative Operating Scenario
Davis Refinery Project, Billings County, ND

	1-Hour				3-Hour				8-Hour				24-Hour				Annual			
	Limits		Results		Limits		Results		Limits		Results		Limits		Results		Limits		Results	
Pollutant	Class I	Class II	Class I	Class II	Class I	Class II	Class I	Class II	Class I	Class II	Class I	Class II	Class I	Class II	Class I	Class II	Class I	Class II	Class I	Class II
SO2	-	7.8	-	0.102	1.0	25	0.026	0.068	-	-	-	-	0.2	5	0.008	0.036	0.1	1	0.045	0.003
NO2	-	7.5	-	3.72	-	-	-	-	-	-	-	-	-	-	-	-	0.1	1	0.015	0.127
PM10	-	-	-		-	-	-	-	-	-	-	-	0.2	5	0.063	0.331	0.2	1	0.002	0.022
PM2.5	-	-	-	-	-	-	-	-	-	-	-		0.07	1.2	0.025	0.140	0.06	0.3	0.002	0.013
CO	-	2000	-	4.88	-	-	-	-	-	500	-	2.33	-	-	-	-	-	-	-	-

Table 8a – Class I Areas PSD Increments and Significant Impact Levels
Primary Operating Scenario
Davis Refinery Project, Billings County, ND

Pollutant / Averaging Time	Significant Impact Level (μg/m^3)	Modeled Result (μg/m^3)	Receptor Location / Coordinate	
			X	Y
PM_{10}; Annual	0.2	6.27E-03	627610.4	5195675.9
PM_{10}; 24 hour	0.2	2.53E-02	622580	5198267
$PM_{2.5}$; Annual	0.06	2.49E-03	627610.4	5195675.9
$PM_{2.5}$; 24 hour	0.07	4.69E-02	627610.4	5195675.9
SO_2; Annual	0.1	4.92E-03	627610.4	5195675.9
SO_2; 24 hour	0.2	1.42E-01	620933.44	5195745.45
SO_2; 3 hour	1.0	6.35E-01	627610.4	5195675.9
NO_2; Annual	0.1	2.54E-02	627860.4	5195425.9

Table 8b – Class I Areas PSD Increments and Significant Impact Levels
Alternative Operating Scenario
Davis Refinery Project, Billings County, ND

Pollutant / Averaging Time	Significant Impact Level (μg/m^3)	Modeled Result (μg/m^3)	Receptor Location / Coordinate	
			X	Y
PM10; Annual	0.2	2.21E-03	627610.4	5195675.9
PM10; 24 hour	0.2	6.32E-02	620933.44	5195745.45
PM2.5; Annual	0.06	1.51E-03	627610.4	5195675.9
PM2.5; 24 hour	0.07	2.46E-02	628110.4	5197675.9
SO2; Annual	0.1	4.53E-02	627610.4	5195675.9
SO2; 24 hour	0.2	8.14E-03	620933.4	5195745.5
SO2; 3 hour	1.0	2.64E-02	620933.4	5195745.5
NO2; Annual	0.1	1.50E-02	627610.4	5195675.9

Table 9a – Class II Areas PSD Increments and Significant Impact Levels
Primary Operating Scenario
Davis Refinery Project, Billings County, ND

Pollutant / Averaging Time	Significant Impact Level (μg/m^3)	Modeled Result (μg/m^3)	Receptor Location / Coordinate	
			X	Y
PM_{10}; Annual	1.0	6.35E-02	634060.375	5193076
PM_{10}; 24 hour	5.0	6.38E-01	633311.375	5192899
$PM_{2.5}$; Annual	0.3	1.74E-02	634460.4	5192876.0
$PM_{2.5}$; 24 hour	1.2	1.68E-01	634460.4	5192876.0
SO_2; Annual	1.0	2.75E-02	634560.4	5192876.0
SO_2; 24 hour	5.0	0.47	634460.4	5192876.0
SO_2; 3 hour	25	1.06	627610.4	5193426.0
SO_2; 1 hour	7.8	2.17	630960	5195676
NO_2; Annual	1.0	2.87E-01	634060.375	5193076
NO_2; 1 hour	7.5	7.10	630360.375	5192176
CO; 8 hour	500	0.65	634360.375	5193476
CO: 1 hour	2000	2.17	630960.375	5195676

Table 9b – Class II Areas PSD Increments and Significant Impact Levels
Alternative Operating Scenario
Davis Refinery Project, Billings County, ND

Pollutant / Averaging Time	Significant Impact Level (μg/m^3)	Modeled Result (μg/m^3)	Receptor Location / Coordinate	
			X	Y
PM10; Annual	1.0	2.21E-02	634060.375	5192876
PM10; 24 hour	5.0	3.31E-01	634060.375	5192876
$PM_{2.5}$; Annual	0.3	1.28E-02	634060.4	5192976.0
$PM_{2.5}$; 24 hour	1.2	1.39E-01	634060.4	5192876.0
SO_2; Annual	1.0	2.52E-03	634060.4	5192976.0
SO_2; 24 hour	5.0	3.55E-02	634060.4	5192876.0
SO_2; 3 hour	25	6.82E-02	633372.1	5193743.0
SO_2; 1 hour	7.8	1.02E-01	635260.4	5192976
NO_2; Annual	1.0	1.27E-01	634060.4	5192976
NO_2; 1 hour	7.5	3.72	627610.4	5193426
CO; 8 hour	500	2.33	633354.7	5193725.0
CO: 1 hour	2000	4.88	635260.4	5192976.0

4.0 AIR TOXICS ANALYSIS

4.1 DAVIS REFINERY TIER 3 ANALYSIS

To determine compliance with the applicable Guideline Concentration (GC) (8-hour GC, 1-hour GC, or carcinogenic risk criteria) of the policy of the Control of Hazardous Air Pollutant Emissions in North Dakota (NDDH policy), the maximum off-property, ground-level ambient concentration of each Hazardous Air Pollutant (HAP) emitted from an affected HAP source was calculated using the Tier 3 approach as outlined by the NDDoH Air Toxics Policy. The candidate model used for the Tier 3 procedure was BREEZE AERMOD. AERMOD was utilized to model the highest 1-hour and 8-hour HAP concentration beyond project boundaries. These values were then used for further analysis using the Tier 3 approach per the Air Toxics Policy.

For HAPs with known or possible carcinogenic health effects (i.e., those HAPs for which a unit risk factor has been developed in Appendix B of the NDDH policy), the maximum individual carcinogenic risk (MICR) associated with emissions from the source was calculated as outlined in the Determination of Compliance section of the NDDH policy. Similarly, the non-carcinogenic health effects of HAPs emitted from a source was evaluated by determining the hazard index for the HAPs for which an 8-hour GC or 1-hour GC has been established in Appendix A of the NDDH policy.

The following calculations have been performed:

1. Estimating the maximum 1-hour and 8-hour concentrations using the following formula:
   - Maximum 1-hour concentration: Total modeled 1-hour concentration (mg/m3) × weight percentage of each HAP.
   - Maximum 8-hour concentration: Total modeled 8-hour concentration (mg/m3) × weight percentage of each HAP.
2. Conducting the MICR analysis using the following equation:
   - MICR = 1-hour concentration (µg/m3) × Unit Risk Factor (m3/µg)
3. Determining the hazard index for HAPs for which a Guideline Concentration has been established in Appendix A of the NDDH policy. For the HAPs which have both 1-hour and 8-hour GCs, the higher of the two ratios (MC/GC) was utilized in the following equation:
   - Hazard Index = MC1/GC1 + MC2/GC2 + … + MCn/GCn
   - Where MC1, MC, …, MCn are the modeled concentrations for HAPs 1, 2, …, n and GC1, GC2, …, GCn are Guideline Concentration for HAPs 1, 2, …, n.

4.2 AIR TOXICS ANALYSIS RESULTS

The MICR of all HAPs emitted by point sources at the proposed new refinery, in aggregate, is 4.57×10-6, which is less than the NDDH Policy threshold of 1.00×10-5.

The Hazard Index for the proposed new refinery, in aggregate, is 7.95×10-2, which is less than the maximum hazard index of 1.00 for a new source.

The MICR and the hazard index are below the respective thresholds for each chemical category; therefore, the proposed Davis Refinery is in compliance with the NDDH air toxics policy. Emission calculations and the details of the air toxics analysis can be found in Attachment D.

ATTACHMENT A

Electronic Files Lists and Titles

ATTACHMENT A

ELECTRONIC FILES LIST FOR MODELING AND ANALYSIS
DAVIS REFINERY PROJECT, BILLINGS COUNTY, ND

AERMET PROCESSED FILES

- AERMET0913MRG.MRG
- AERMET0913PFL.PFL
- AERMET0913SFC.SFC
- NDDR2009-2013.atz

Bismarck Upper Air Data

- BIS24011-072016.144.txt
- BIS24011-072016.DAT
- BIS24011-072016.txt
- BIS24011FSL.txt

BPIP

- BPIPIN.txt
- BPIPOUT.txt
- BPIPSUMMARY.txt

Dickinson Upper Air Data

- 2013data
- 2013data,inp
- 2013data.inp,txt
- Description.txt
- Invntory.txt
- Station.txt

ELEVATION DATA

- 10012016.bhm
- 10012016.jpg
- NED07192016
- NED072061367.zip

ATTACHMENT A

ELECTRONIC FILES LIST FOR MODELING AND ANALYSIS
DAVIS REFINERY PROJECT, BILLINGS COUNTY, ND

Output Files

Phase I Files

- SOX PHASE I ANNUAL.txt
- SOX PHASE I 24-H.txt
- SOX PHASE I 3-H.txt
- SOX PHASE I 1-H.txt
- PM 25 PHASE I ANNUAL.txt
- PM 25 PHASE I 24-H.txt
- PM 10 PHASE I ANNUAL.txt
- PM 10 PHASE I 24-H.txt
- NO2 PHASE I ANNUAL.txt
- NO2 PHASE I 1-H.txt
- CO PHASE I 8-HL.txt
- CO PHASE I 1-HL.txt

Phase II Files

- SOX PII 3-H.txt
- SOX PII 1-H.txt
- SOX PII 24-H.txt
- SOX PII ANNUAL.txt
- NO2 PII ANNUAL.txt
- NO2 PII 1-H.txt
- PM 10 PII ANNUAL.txt
- PM 10 PII 24-H.txt
- PM 2.5 PII AANUAL.txt
- PM 2.5 PII 24-H.txt
- CO PII 1-H.txt
- CO PII 8H.txt

ATTACHMENT A

ELECTRONIC FILES LIST FOR MODELING AND ANALYSIS
DAVIS REFINERY PROJECT, BILLINGS COUNTY, ND

Phase I In/Out Model Files

CO Phase I

- COPHASE110082016.ami
- COPHASE110082016.amz

NO2 Phase I

- NO2PHASE110082016.ami
- NO2PHASE110082016.amz

PM 2.5 Phase I

- PM25PHASE110082016.ami
- PM25PHASE110082016.amz

PM 10 Phase I

- PM10 PI 10132016.ami
- PM10 PI 10132016.amz

SO2 Phase I

- SOXPHASE110082016.ami
- SOXPHASE110082016.amz

Phase II In/Out Model Files

CO Phase II

- CO Phase II.ami
- CO Phase II.amz

NO2 Phase II

- NO2 Phase II.ami
- NO2 Phase II.amz

PM 2.5 Phase II

- PM25 Phase II.ami
- PM25 Phase II.amz

PM 10 Phase II

- PM10 Phase II.ami
- PM10 Phase II.amz

SO2 Phase II

- SO2 Phase II.ami
- SO2 Phase II.amz

Air Toxics Analysis

- Tier 3 Analysis.xlsx
- Air Toxics Analysis.xlsx

ATTACHMENT B

Air Quality Dispersion Analysis Guide

North Dakota Department of Health, Division of Air Quality
Air Quality Dispersion Modeling Analysis Guide

June 21, 2013

The following Air Quality Modeling Analysis Guide is provided by the North Dakota Department of Health (Department) to aid air permit applicants in the process of developing an air dispersion modeling protocol and in conducting an air dispersion modeling analysis. This general Guide outlines common topics that should be addressed in a dispersion modeling analysis and report for projects located in North Dakota. As each project is unique, the Guide should not be considered "all inclusive" and some important items for a given project may not be reflected in the itemized list below. The Department should be consulted at an early stage in the project to assure that essential items are addressed in any final modeling analysis.

The Department strongly encourages the development of a pre-application dispersion modeling protocol in consultation with the Department in order to expedite the ultimate project review process. This Guide will aid in the development of that protocol.

A list of applicable State issued modeling guidance documents covering specific issues is included at the end of this Guide. Note that these documents include criteria to determine whether modeling will be required for a permit-related project. Also included is guidance related to air toxics analyses. Please contact the Department with any project-specific questions or concerns by calling 701.328.5188.

To the extent applicable, the information in this Guide is consistent with the EPA Guideline on Air Quality Models[1]. The Department Guide is intended to clarify EPA Guidance for applicability to North Dakota regulatory projects, and to supplement EPA guidance on issues where guidance is not specifically provided. This Guide assumes basic familiarity with regulatory air quality modeling applications on the part of the reader.

It is expected that the information contained in this Guide will be updated frequently, so the Department's Web site[2] should be actively monitored for the most recent version. At this time, the Guide applies primarily to local scale modeling analyses for NAAQS, PSD Class II increments, and air toxics thresholds. Future updates to this Guide or supplemental documents will include modeling guidance for Class I PSD increments and air quality related values (AQRVs). If you anticipate that your project will need to address one of these two conditions or any other item not specifically covered by the Guide at this time, please consult with the Department directly for further information and guidance.

---

[1] CFR, 2005. EPA Guideline on Air Quality Models. 40 CFR (Code of Federal Regulations) Part 51, Appendix W.

[2] http://www.ndhealth.gov/AQ/DispersionModeling.htm

I. Modeling for NAAQS, NDAAQS, PSD Class II increments, Air Toxics thresholds

A. Screening Analyses (optional for isolated single source)

1. Model selection:

☐ AERSCREEN – applicable if significant terrain height variations involved. Because of the relative complexity (for a screening tool) involved in executing and reviewing AERCREEN analyses, the NDDH discourages the use and submittal of AERSCREEN screening techniques for projects in North Dakota. Direct application of refined modeling using AERMOD is recommended if significant terrain height variations are associated with an isolated single source.

☐ SCREEN3 – applicable only in relatively level terrain.

2. Model input/execution:

☐ AERSCREEN – Refer to AERSCREEN User's Guide for information on input data and execution for AERMOD. As noted above, the NDDH discourages the use of AERSCREEN for projects in North Dakota.

☐ SCREEN3 - Command line program which prompts user for all necessary input data (EPA version).

B. Refined Analyses (SIL and cumulative)

1. Model selection:

☐ AERMOD (provide version number)

2. Emission inventory:

☐ Subject source

- ☐ Point source fixed stack characteristics for each emission unit:
  - ○ Location (e.g., UTM coordinates)
  - ○ Stack height
  - ○ Stack base elevation (above MSL)

- Stack exit diameter
- Stack orientation (e.g., vertical up, vertical down, horizontal, rain caps, etc.)

☐ Point source variable stack characteristics for each emission unit. Ensure that worst case emission scenarios are accounted for (i.e., consider multiple operating loads, start-up, shut-down) For combustion turbines, where emissions are particularly sensitive to ambient temperature, emission scenarios should also account for a range of ambient temperatures.

- Emission rate for each applicable pollutant species
- Stack exit velocity
- Stack exit temperature

☐ Appropriate adjustment of stack exit velocity based on stack orientation (See AERMOD Implementation Guide[3])

☐ Appropriate determination of point source stack characteristics for flares (See Flare Guidance). Stack characteristics which are adjusted for flares include stack height, stack diameter, exit velocity, and exit temperature.

☐ Area source characteristics for each emission unit (if any):

- Emission rate for each applicable pollutant species
- Boundary of area
- Effective height of area emissions

☐ Volume source characteristics for each emission unit (if any):

- Emission rate for each applicable pollutant species
- Effective dimensions
- Height of center of volume source
- The NDDH does not require inclusion of paved road fugitive emissions in modeling analyses.

☐ Building downwash characteristics for each affected (less than GEP height) point-source stack, developed using the EPA BPIPPRM program (include a plant layout drawing):

- Building height for 36 wind directions
- Effective building width for 36 wind directions
- Building length for 36 wind directions
- X offset for 36 wind directions (XBADJ)
- Y offset for 36 wind directions (YBADJ)

[3] EPA, 2009. AERMOD Implementation Guide: March 19, 2009. Accessed at: http://www.epa.gov/scram001/7thconf/aermod/aermod_implmtn_guide_19March2009.pdf. June 20, 2013

- ☐ Off-site (nearby) sources (not applicable for SILs or Air Toxics analyses). For PSD projects, the impact of emissions from all sources located within 50 km of the subject source should generally be included in the modeling analysis. For non-PSD projects, the impact of emissions from all sources located within 20 km of the subject source should generally be included in the modeling analysis. Impact from sources not explicitly modeled will be accounted for with the background concentration(s).
  - ☐ Point source stack characteristics for each nearby-source unit:
    - ○ Emission rate for each applicable pollutant species. Emission rate should reflect maximum allowable (permitted). For PSD increment analyses, or if maximum allowable not available for AAQS analyses, actual emission rate may be used.
    - ○ Location (e.g., UTM coordinates)
    - ○ Stack height
    - ○ Stack base elevation (above MSL)
    - ○ Stack exit diameter
    - ○ Stack exit velocity
    - ○ Stack exit temperature
    - ○ Stack orientation (e.g., vertical up, vertical down, horizontal, rain caps, etc.)
  - ☐ Appropriate adjustment of stack exit velocity based on stack orientation (See See AERMOD Implementation Guide[4])
  - ☐ Appropriate determination of point source stack characteristics for flares (See Flare Guidance). Stack characteristics which are adjusted for flares include stack height, stack diameter, exit velocity, and exit temperature.
  - ☐ The NDDH should be consulted regarding the need for including building downwash effects for nearby sources.

NOTE: Stack characteristics for nearby sources can typically be obtained from the Department. Please contact the Department for more information.

3. Meteorological data:

- ☐ Selection of meteorological observations:
  - ☐ Five consecutive years of recent representative National Weather Service (NWS) hourly surface observations (identify station).

[4] EPA, 2009. AERMOD Implementation Guide: March 19, 2009. Accessed at: http://www.epa.gov/scram001/7thconf/aermod/aermod_implmtn_guide_19March2009.pdf. June 20, 2013

- ☐ Five concurrent years of NWS twice-daily upper-air observations (identify station).
- ☐ Surface observations from non-NWS sites may be considered as an option (e.g., on-site, Department monitoring sites), but the Department should be contacted regarding the availability and acceptability of such data, as well as pairing such data with NWS upper-air observations.

☐ Application of AERSURFACE (specify version number) to process land surface characteristics for use with AERMET. (See Department guidance for AERSURFACE input settings.)

☐ Application of AERMET (specify version number) to process surface observations, upper-air observations, and AERSURFACE output in order to create the SURFACE and PROFILE files required by AERMOD.

NOTE: AERMET-compatible surface and upper-air five-year meteorological data sets for a number of NWS stations located in and near North Dakota are available via the Department's FTP site[5].

4. Receptor locations:

☐ Specify primary receptor network (a case-by-case determination will likely be required, but the following is a typical configuration for medium-buoyancy sources):

- ☐ Receptors spaced at 25 m along the limited access (fenced) boundary (ambient air boundary). If access is not limited, receptor coverage must include entire property area.
- ☐ Nested Cartesian receptor grids outside of the fenced boundary. Resolution of nested receptor grids should proceed in a geometric pattern, e.g., 50 m for the inner grid, 100 m for the next grid, 250 m for the next grid, and 500 m for the outside grid. The maximum extent of the outside grid will depend on the buoyancy (plume height) of the source. Generally, a grid extending out to 10 km from the source will be adequate for a medium-buoyancy source.

☐ In addition to the primary network, additional receptors may be needed to address isolated terrain features, impact from low-level sources located near the facility fence line, and to refine predictions when the maximum modeled impact occurs at a receptor located in a relatively coarse portion of the primary receptor network.

☐ If the analysis includes nearby sources, the Department may request that additional receptors are placed to account for the maximum combined impact of the subject source and the nearby source.

[5] ftp://ftp.state.nd.us/AirQuality/AERMOD/

☐ Obtain digital elevation data (e.g., NED) for the modeling domain.

☐ Application of AERMAP (specify version number) to receptor locations and digital elevation data in order to determine receptor elevation and hill-height scale needed for AERMOD.

☐ Provide map showing receptor locations and elevation with respect to source location(s).

5. Background concentrations (account for contribution of natural and non-modeled anthropogenic sources, not applicable for SILs or Air Toxics analyses):

☐ Fixed background concentrations for SO_2, NO_2, PM_{10}, $PM_{2.5}$, and CO (all averaging times) are provided in Table 1. These fixed background levels reflect default values which are representative for the entire State of North Dakota. The Department should be contacted regarding representativeness and current status of these values for a particular modeling project.

☐ Variable (hourly) background concentration files for SO_2 and NO_2 are available for several locations on the Department's FTP site[6]. These hourly background files cover a five-year period and are concurrent with the meteorological data sets also provided on the FTP site.

☐ Hourly ozone background concentration files are also provided on the Department's FTP site for several locations. These ozone data sets are provided to implement the Ozone Limiting Method (OLM) for NO_2 Tier 3 analysis.

NOTE: The use of hourly background concentration data for SO_2 and NO_2, if representative data are available for the project location, will produce the least conservative results when added to model output (i.e., less conservative than use of fixed background concentrations).

Table 1
Fixed Background Concentrations for North Dakota
(μg/m^3)

	Averaging Period				
Pollutant	**1-hour**	**3-hour**	**8-hour**	**24-hour**	**Annual**
SO_2	13	11	---	9	3
NO_2	35	---	---	---	5
PM_{10}	---	---	---	30	15
$PM_{2.5}$	---	---	---	13.7	4.75
CO	1149	---	1149	---	---

[6] ftp://ftp.state.nd.us/AirQuality/AERMOD/

6. AERMOD execution:

- ☐ Execute AERMOD for emission inventory, meteorological data, receptor locations, and with background concentrations, as outlined above:
  - ☐ Use regulatory default option.
  - ☐ Specify rural source (urban may be appropriate in rare cases).
  - ☐ Use appropriate options for processing form of new 1-hour NAAQS for SO_2 and NO_2, and 24-hour NAAQS for PM_{10} and $PM_{2.5}$.
  - ☐ Use proper settings to implement Tier 3 NO_2 analysis (if applicable):
    - ○ The Department prefers the OLM option to PVMRM.
    - ○ With OLM, use setting "OLMGROUP ALL".
    - ○ Use hourly ozone background data file (above).
    - ○ Contact vendor and Department for appropriate in-stack ratios of NO_2 to NO_X. Use of a default value of 0.5 is acceptable without justification.
    - ○ Note that EPA approval is needed regarding protocol for Tier 3 NO_2 analysis.
  - ☐ Add background concentrations to model results (not applicable for SILs or Air Toxics analyses, and generally not applicable for PSD increment analyses).

7. Interpretation of model output:

- ☐ Comparison of results with acceptable air quality thresholds:
  - ☐ Significant impact levels (see Table 2)
  - ☐ NAAQS/NDAAQS (see Table 3)
  - ☐ PSD Class II increments (see Table 4)
  - ☐ Air Toxics thresholds (MICR and Hazard Index, see State Air Toxics Policy)
- ☐ Provide receptor location of maximum impact for each species and averaging times. Location of maximum impact should be subsequent to processing the form of the NAAQS (e.g., 5-year average of annual 99th percentile of daily maximum 1-hour average concentration for SO_2).

8. Submittal of modeling report:

☐ A modeling report, including a detailed description of all input data, model execution, and results, should be prepared and provided with the permit application.

☐ All computer modeling files should be submitted along with the modeling report.

☐ An electronic copy of the modeling report should be submitted along with at least three hard copies. Electronic submittal should included both PDF and MS Word (or other native) versions.

Table 2
Class II Area Significant Impact Levels
(μg/m^3)

	Averaging Period				
Pollutant	**1-hour**	**3-hour**	**8-hour**	**24-hour**	**Annual**
SO_2	7.8	25	---	5	1
NO_2	7.5	---	---	---	1
PM_{10}	---	---	---	5	1
$PM_{2.5}$	---	---	---	1.2	0.3
CO	2000	---	500	---	---

Table 3
North Dakota and National Ambient Air Quality Standards (AAQS)
Criteria Pollutants (µg/m^3)

Pollutant	Averaging Period	N.D. AAQS	National AAQS
Sulfur Dioxide (SO_2)	1-hour	196[2]	196[2]
	3-hour	1309[1]	1309[1]
	24-hour	---	365[1]
	Annual	---	80
Nitrogen Dioxide (NO_2)	1-hour	188[3]	188[3]
	Annual	100	100
Inhalable Particulate (PM_{10})	24-hour	150[1]	150[1]
Particulate ($PM_{2.5}$)	24-hour	35[4]	35[4]
	Annual	15[5]	12[5]
Carbon Monoxide (CO)	1-hour	40,000[1]	40,000[1]
	8-hour	10,000[1]	10,000[1]
Lead (Pb)	Quarterly	1.5	1.5

[1] One exceedance per year is permitted.
[2] Based on 3-year average of annual 99th percentile (4th highest) of daily maximum 1-hour average concentration.
[3] Based on 3-year average of annual 98th percentile (8th highest) of daily maximum 1-hour average concentration.
[4] Based on 3-year average of annual 98th percentile 24-hour concentration.
[5] Based on 3-year average of annual average concentrations.

Table 4
North Dakota / National Prevention of Significant Deterioration (PSD) Increments
Criteria Pollutants (µg/m^3)

Pollutant	Averaging Period	Class I	Class II	Class III
Sulfur Dioxide (SO_2)	3-hour	25[1]	512[1]	700[1]
	24-hour	5[1]	91[1]	182[1]
	Annual	2	20	40
Nitrogen Dioxide (NO_2)	Annual	2.5	25	50
Particulate (PM_{10})	24-hour	8[1]	30[1]	60[1]
	Annual	4	17	34
Particulate ($PM_{2.5}$)	24-hour	2[1]	9[1]	18[1]
	Annual	1	4	8

[1] One exceedance per year is permitted.

II. Guidance Documents

The North Department has developed the following guidance and policy documents to assist permit applicants in the process of drafting complete permit applications.

The first three documents referenced below can be accessed via the links posted under the document title. The remainder of the documents can be found on the Department's FTP site under "Guidance and Policy Documents".

To request access to the FTP site, or for more information on Dispersion Modeling, please direct questions or comments to the North Dakota Department of Health at 701.328.5188.

Intradepartmental Memorandum - Criteria Pollutant Modeling Requirements for a Permit to Construct: September 12, 2006
http://www.ndhealth.gov/AQ/AirPermitting_files/Modeling%20Memo.pdf

> The Department has developed a set of guidelines to determine what modeling requirements apply to a facility as part of the application for a Permit to Construct (PTC). This document outlines the requirements for projects subject to the Prevention of Significant Deterioration of Air Quality (PSD) rules and for projects not subject to PSD; and also includes additional information applicable to all projects (both PSD and non-PSD).

Policy for the Control of Hazardous Air Pollutant Emissions in North Dakota (Air Toxics Policy): August 25, 2010
http://www.ndhealth.gov/AQ/Toxics/North%20Dakota%20Air%20Toxics%20Policy.pdf

> This document establishes the policy for the evaluation of sources emitting Hazardous Air Pollutants (HAPs) into the ambient air. It includes a description of the three-tiered approach to calculating the maximum off-property ground-level ambient concentration of each HAP.

Dispersion Modeling Requirements, Compressor Engines and Glycol Dehydration Units
May 16, 2011
http://www.ndhealth.gov/AQ/AirPermitting_files/Compressor%20Engine%20&%20Dehydrator%20Policy.pdf

This document clarifies when dispersion modeling is required to be submitted for facilities which include compressor engine(s) and/or glycol dehydration unit(s) as the primary source(s) of emissions. Both criteria pollutants and hazardous air pollutants (air toxics) are addressed.

Model Input Parameters for Flares
November 10, 2010
Flare Plume Rise.pdf

This document outlines the Department recommended approach for developing the model input parameters of stack temperature, diameter, exit velocity, and stack height to allow a given refined air quality model (e.g. AERMOD, ISC-PRIME) to accurately calculate a buoyancy representative of the conditions above the flare.

Recommended AERSURFACE Inputs (North Dakota)
September 16, 2010
AERSURFACE Inputs.pdf

This document provides Department recommended inputs for AERSURFACE, a surface land cover characteristics preprocessor for AERMOD, appropriate for modeling in North Dakota.

User's Instructions for HRLYNAAQS.
September 24, 2010
HRLYNAAQS User's Guide.pdf

The software program HRLYNAAQS is provided by the Department (on request) to assist permit applicants and consultants in the demonstration of modeled compliance with the new 1-hour National Ambient Air Quality Standards (NAAQS) for NO_2 and SO_2. HRLYNAAQS provides the annual 98th (NO_2) or 99th (SO_2) percentile of maximum daily 1-hour concentrations averaged across five years, for each receptor location. Along with the total concentration, HRLYNAAQS also provides individual contributions for up to five source groups.

AERMET Surface Meteorology Stations (2004-2008)
AERMET Upper-Air Meteorology Stations (2004-2008)
Met Stations 2004-2008 WBAN.pdf

This document provides the locations of surface and upper-air meteorology stations in North Dakota for which meteorological data suitable for use with AERMET is provided by the Department (available on request).

Hourly Ozone Sites (2004-2008)
Ozone Sites 2004-2008.pdf

This document provides the locations within North Dakota of hourly ozone ambient monitoring sites as well as information on the formatting of the hourly ozone source data files (available on request).

ATTACHMENT C

Emissions Sources Characteristics

ID	DESCRIPTION	X	Y	Elevation (m)	Stack Height (m)	Stack temperature (K)	Stack Velocity (m/s)	Stack Diameter (m)
101H0101	Atmospheric Distillation Unit Heater	633487.731	5193293.244	808.38	38.89	692.98	6.13	1.92
102H0201	Atmospheric Distillation A Heater	633559.049	5193295.392	806.57	38.89	693.15	6.13	1.92
103H0301	Vacuum Distillation Unit Heater 1	633656.032	5193379.472	804.96	38.1	588.71	5.15	1.98
103H0302	Vacuum Distillation Unit Heater 2	633656.452	5193373.402	804.93	25.91	588.71	6.34	1.55
112H1201	FCCU Raw Charge Heater	633689.597	5193286.628	805	21.95	691.48	3.02	1.68
112V1201	FCCU Vent Stack	633689.662	5193326.618	804.59	36.58	522.04	19.7	1.22
117H1701	Isomerization Heater 1 Reactor Charge	633715.339	5193381.258	803.89	10.97	713.04	0.76	0.82
117H1702	Isomerization Heater 2	633715.777	5193375.233	803.93	14.02	692.98	0.58	1.4
105H0501	Heavy Naphtha 1 Charge Heater	633435.314	5193367.913	811.04	27.74	692.98	4.94	0.91
105H0502	Heavy Naphtha 2 Strip Reboiler	633444.492	5193368.211	810.98	27.74	692.98	5.82	0.91
106H0601	Catalytic Reformer 2 Heater	633428.819	5193260.307	809.28	12.8	692.15	2.95	1.22
107H0701	Catalytic Reformer 1 Heater	633362.297	5193241.365	811.68	36.58	692.98	8.29	1.83
111H1101	Light Naphthat HDT Charge Heater	633524.931	5193369.69	808.91	51.82	695.98	3.69	1.07
118H1801	Alkylation Unit Heater	633768.252	5193378.01	803	28.96	691.76	6.83	1.22
110H1001	Diesel Hydrotreater Treater Heater	633435.753	5193425.2	813.02	51.82	693.15	6.31	1.07
122H2201	SRU Thermal Oxidizer	633353.807	5193364.491	811.73	18.29	485.65	15.24	0.52
114H1401	FCC Naphtha Hydrotreater Heater	633606.041	5193371.555	805.99	27.74	691.09	6.25	0.91
202B0201	Boiler #1	633461.315	5193193.92	810.06	45	418.71	28.62	0.91
202B0202	Boiler #2	633473.501	5193194.281	809.82	45	418.71	28.62	0.91
202B0203	Boiler #3	633485.688	5193194.643	809.6	45	418.71	28.62	0.91
125H2501	Kerosene Hydrotreater Heater	633523.246	5193427.747	809.63	29.26	679.98	6.68	0.76
CT1501	Cooling Tower 1501	633503.235	5193157.875	810.4	21.34	302.59	1.52	10.97
CT1502	Cooling Tower 1502	633507.481	5193158.001	810.35	21.34	302.59	1.52	10.97
CT1503	Cooling Tower 1503	633511.728	5193158.127	810.3	21.34	302.59	1.52	10.97
FL1701	#1 HC Emergency Flare Conversion to Point Source	633506.045	5193593.555	810.79	47.06	1000	40	0.4
FL1702	#2 HC Emergency Flare Conversion to Point Source	633492.242	5193666.168	808.99	47.06	1000	40	0.4
FL1703	#3 Acid Flare Conversion to Point Source	633495.291	5193666.263	808.93	47.03	1000	40	0.11
FL1704	#4 Enclosed HC Operating Flare Conversion to Point Source	633600.65	5193607.193	808.9	17.86	1000	40	0.79
FLPILOT1	#1 HC Emergency Flare (3 Pilots)	633495.291	5193666.263	808.93	45.72	810	4.75	0.4
FLPILOT2	#2 HC Emergency Flare (3 Pilots)	633600.65	5193607.193	808.9	45.72	810	4.75	0.4
FLPILOT3	#3 Acid Flare (2 Pilots)	633492.242	5193666.168	808.99	45.72	811	4.75	0.11
FLPILOT4	#4 Enclosed HC Operating Flare (12 Pilots)	633506.045	5193593.555	810.79	15.24	811	4.75	0.79

ATTACHMENT D

Air Toxics Analysis Spreadsheets

Emission Rates are shown based on STPY

Unit	Leaks	Crude Distillation	Alkylation	Catalytic reforming	Hydrocracking	Hydrotreating/ hydrorefining	Catalytic cracking	Hydrogen plant	Product blending	Sulfur plant	Vacuum distillation	Isomerization	Tanks	Crude Oil	Gasoline and Other Light Distillates	Diesel Fuel and Other Middle Distillates	IFR	Cone not connected to VRU	Cone connected to VRU	Stationary Combustion Sources	Boilers (Qty: 3)	Heaters (Qty: 16)	Emergency Generator Set	FireWater Pump	Fluid Catalytic Cracking Unit	FCCU
Total/ Unit (STPY)	3.19E+00	6.74E-01	7.17E-01	6.88E-01		2.06E-01	8.13E-01		0.00E+00		2.06E-02	6.84E-02	4.48E+00	4.50E-01	3.82E+00	2.14E-01				1.74E+00	3.87E-01	1.33E+00	1.37E-02	1.08E-03	9.39E-01	9.39E-01
1,2,4-trimethyl benzene	2.30E-01	3.98E-02	0.00E+00	7.32E-02		1.15E-02	1.05E-01		0.00E+00		1.19E-03	0.00E+00														
1,3-Butadiene	6.86E-03	6.32E-04	5.46E-03	1.12E-04		0.00E+00	6.61E-04		0.00E+00		0.00E+00	0.00E+00													8.18E-05	8.18E-05
2,2,4-Trimethyl pentane	6.43E-01	3.16E-03	6.20E-01	3.10E-03		0.00E+00	1.65E-02		0.00E+00		1.79E-04	1.53E-04														
2-Methyl naphthalene													9.13E-03	0.00E+00	8.43E-03	7.03E-04				2.10E-05	4.73E-06	1.63E-05			7.37E-05	7.37E-05
3-Methylchloranthrene																				1.58E-06	3.55E-07	1.22E-06				
7,12-Dimethylbenz(a) anthracene																				1.40E-05	3.15E-06	1.09E-05				
Acenaphthene																				4.60E-05	4.73E-07	1.63E-06	4.07E-05	3.21E-06	9.00E-06	9.00E-06
Acenaphthylene																				9.23E-05	1.28E-06	4.42E-06	8.03E-05	6.32E-06	3.19E-04	3.19E-04
Acetaldehyde																				1.08E-02	2.37E-03	8.15E-03	2.19E-04	1.73E-05	5.32E-02	5.32E-02
Acetone																									6.55E-03	6.55E-03
Acrolein																				1.50E-02	3.35E-03	1.15E-02	6.85E-05	5.40E-06	2.70E-03	2.70E-03
Anthracene													6.26E-04	0.00E+00	5.78E-04	4.82E-05							1.07E-05	8.43E-07	2.74E-04	2.74E-04
Antimony																				4.56E-04	1.02E-04	3.53E-04			1.79E-05	1.79E-05
Arsenic																				1.75E-04	3.94E-05	1.36E-04			2.75E-06	2.75E-06
Benzene	2.09E-01	5.69E-02	7.44E-04	7.82E-02		1.06E-02	5.51E-02				1.79E-04	7.67E-03	2.20E-01	4.02E-02	1.69E-01	1.08E-02				9.12E-03	4.14E-04	1.43E-03	6.75E-03	5.32E-04	4.50E-02	4.50E-02
Benzo(a)anthracene																				1.93E-05	4.34E-06	1.49E-05			1.55E-06	1.55E-06
Benzo(a)pyrene																				5.24E-05	1.12E-05	3.87E-05	2.23E-06	1.76E-07	2.91E-05	2.91E-05
Benzo(b)fluoranthene																				3.41E-05	5.32E-06	1.83E-05	9.65E-06	7.61E-07	9.82E-06	9.82E-06
Benzo(e)pyrene																									1.35E-06	1.35E-06
Benzo(g,h,i)perylene																				6.35E-06	2.56E-07	8.83E-07	4.83E-06	3.81E-07	1.27E-05	1.27E-05
Benzo(k)fluoranthene																				1.69E-05	3.35E-06	1.15E-05	1.90E-06	1.49E-07	7.37E-06	7.37E-06
Beryllium																				1.14E-04	2.56E-05	8.83E-05			8.25E-07	8.25E-07
Biphenyl	3.91E-02	3.79E-03	0.00E+00	0.00E+00		6.31E-03	2.37E-02				5.36E-03	0.00E+00	1.21E-03	8.03E-04	4.10E-04	0.00E+00				0.00E+00						
Bromomethane																				0.00E+00					5.73E-03	5.73E-03
Cadmium																				9.64E-04	2.17E-04	7.47E-04			3.57E-06	3.57E-06
Carbon disulfide																									1.51E-03	1.51E-03
Chlorine																										
Chromium (hexavalent)																				2.45E-04	5.52E-05	1.90E-04				
Chromium (total)																				1.23E-03	2.76E-04	9.51E-04			6.87E-05	6.87E-05
Chrysene													5.48E-04	0.00E+00	5.06E-04	4.22E-05				1.58E-05	3.15E-07	1.09E-06	1.33E-05	1.05E-06	9.41E-06	9.41E-06
Cobalt																				7.19E-05	1.62E-05	5.57E-05			1.43E-05	1.43E-05
Cresol													3.38E-02	2.41E-03	3.13E-02	3.81E-05										
Cumene	2.03E-02	7.59E-03	0.00E+00	5.21E-03		2.01E-03	5.51E-03				0.00E+00	0.00E+00	4.02E-02	2.01E-03	3.61E-02	2.01E-03										
Dibenz(a,h)anthracene																				4.30E-06	2.37E-07	8.15E-07	3.01E-06	2.37E-07	1.15E-05	1.15E-05
Dichlorobenzene																				1.05E-03	2.37E-04	8.15E-04				
Ethylbenzene	1.61E-01	3.98E-02	0.00E+00	4.84E-02		1.06E-02	6.06E-02				1.19E-03	0.00E+00	8.47E-02	6.42E-03	7.47E-02	3.61E-03				1.40E-02	3.15E-03	1.09E-02			6.55E-04	6.55E-04
Fluoranthene																				4.03E-05	5.72E-07	1.97E-06	3.50E-05	2.76E-06	2.50E-04	2.50E-04
Fluorene													9.40E-04	0.00E+00	8.67E-04	7.23E-05				1.22E-04	5.32E-07	1.83E-06	1.11E-04	8.77E-06	9.82E-05	9.82E-05
Formaldehyde																				6.56E-02	1.46E-02	5.03E-02	6.86E-04	5.41E-05	6.55E-01	6.55E-01
Heptachlorodibenzo-p-dioxin																									2.29E-09	2.29E-09
Hexachlorodibenzofuran																									2.58E-09	2.58E-09
Hexane	5.06E-01	2.72E-01	3.97E-02	3.48E-02		5.45E-02	5.51E-02				5.96E-04	4.91E-02	1.45E+00	3.37E-01	1.01E+00	9.64E-02				1.58E+00	3.55E-01	1.22E+00				
Hydrogen chloride																									9.00E-02	9.00E-02
Hydrogen cyanide****																									8.03E-03	8.03E-03
Indeno(1,2,3-c,d)pyrene																				6.61E-05	1.40E-05	4.82E-05	3.60E-06	2.84E-07	1.23E-05	1.23E-05
Manganese																				3.24E-04	7.29E-05	2.51E-04			3.57E-05	3.57E-05
Mercury																				2.19E-04	4.93E-05	1.70E-04			4.91E-06	4.91E-06
Methanol													9.92E-03	0.00E+00	9.15E-03	7.63E-04										
Methyl isobutyl ketone													8.35E-01	0.00E+00	7.71E-01	6.42E-02										
Methyl tertiary-butyl ether													7.47E-01	0.00E+00	7.47E-01	0.00E+00										
Methylene chloride																									1.80E-02	1.80E-02
Naphthalene	8.06E-02	1.58E-02	0.00E+00	1.08E-02		7.17E-03	3.96E-02				7.15E-03	0.00E+00	2.15E-02	2.41E-03	1.83E-02	8.03E-04				1.75E-03	1.18E-04	4.08E-04	1.13E-03	8.91E-05	2.86E-03	2.86E-03
Nickel																				1.84E-03	4.14E-04	1.43E-03			2.75E-04	2.75E-04
Pentachlorodibenzofurans																									1.31E-09	1.31E-09
Phenanthrene													3.91E-03	0.00E+00	3.61E-03	3.01E-04				3.98E-04	3.35E-06	1.15E-05	3.55E-04	2.80E-05	6.55E-04	6.55E-04
Phenol													5.92E-03	3.61E-03	2.17E-03	1.35E-04				3.51E-03	7.88E-04	2.72E-03			2.33E-02	2.33E-02
Pyrene													1.02E-03	0.00E+00	9.40E-04	7.83E-05				3.91E-05	9.66E-07	3.33E-06	3.23E-05	2.54E-06	9.00E-06	9.00E-06
Selenium																				7.71E-04	1.73E-04	5.98E-04			6.87E-06	6.87E-06
Styrene													1.59E-01	0.00E+00	1.59E-01	0.00E+00										
Toluene	6.15E-01	1.08E-01	4.96E-02	2.16E-01		4.88E-02	1.82E-01				2.38E-03	9.20E-03	4.84E-01	3.01E-02	4.34E-01	2.01E-02				5.53E-03	6.50E-04	2.24E-03	2.44E-03	1.93E-04	8.59E-03	8.59E-03
Trichlorofluoromethane																									6.55E-03	6.55E-03
Vanadium																									3.63E-04	3.63E-04
Xylenes (total)	6.76E-01	1.26E-01	1.98E-03	2.18E-01		5.45E-02	2.70E-01				2.38E-03	2.30E-03	3.76E-01	2.49E-02	3.37E-01	1.41E-02				2.37E-02	4.93E-03	1.70E-02	1.68E-03	1.32E-04	8.59E-03	8.59E-03
Zinc																									2.03E-04	2.03E-04

Emission Rates are shown based on STPY

Unit	Catalytic Reforming Unit	Catalytic Reformer #2	Catalytic Reformer #1	Sulfur Recovery Plant	SRU + Tail Gas System	Vacuum Systems	Vacuum Distillation	Blowdown System	Blowdown	Flares	General	Flare operation	Wastewater	Wastewater System	Cooling Towers	Cooling Towers	Rail Product Loading	Crude oil	Gasoline +butane	Jet Kerosene	Diesel	Fuel Oil	Truck Product Loading	Crude oil	Gasoline +butane	Jet Kerosene	Diesel	Fuel Oil	Fugitive Dust	Paved Roads	Catalyst handling
Total/ Unit (STPY)	7.92E-01	2.47E-01	5.46E-01							2.38E+00	2.38E+00		5.24E-01	5.24E-01																	
1,2,4-trimethyl benzene																															
1,3-Butadiene										3.85E-01	3.85E-01		4.38E-05	4.38E-05																	
2,2,4-Trimethyl pentane													1.06E-01	1.06E-01																	
2-Methyl naphthalene	2.32E-07	7.21E-08	1.59E-07																												
3-Methylchloranthrene																															
7,12-Dimethylbenz(a) anthracene																															
Acenaphthene	7.66E-09	2.38E-09	5.27E-09																												
Acenaphthylene	5.34E-09	1.66E-09	3.68E-09																												
Acetaldehyde																															
Acetone																															
Acrolein																															
Anthracene	1.62E-08	5.05E-09	1.12E-08																												
Antimony																															
Arsenic																															
Benzene	7.12E-04	2.22E-04	4.91E-04							4.95E-01	4.95E-01		2.44E-02	2.44E-02																	
Benzo(a)anthracene	1.60E-10	4.99E-11	1.10E-10																												
Benzo(a)pyrene																															
Benzo(b)fluoranthene	2.67E-10	8.32E-11	1.84E-10																												
Benzo(e)pyrene	5.16E-10	1.61E-10	3.56E-10																												
Benzo(g,h,i)perylene	7.12E-10	2.22E-10	4.91E-10																												
Benzo(k)fluoranthene	1.34E-10	4.16E-11	9.20E-11																												
Beryllium																															
Biphenyl													1.03E-04	1.03E-04																	
Bromomethane																															
Cadmium																															
Carbon disulfide																															
Chlorine	4.10E-02	1.28E-02	2.82E-02																												
Chromium (hexavalent)																															
Chromium (total)																															
Chrysene	5.16E-10	1.61E-10	3.56E-10																												
Cobalt																															
Cresol													0.00E+00	0.00E+00																	
Cumene													8.65E-03	8.65E-03																	
Dibenz(a,h)anthracene	1.39E-10	4.32E-11	9.57E-11																												
Dichlorobenzene																															
Ethylbenzene										1.10E-02	1.10E-02		1.89E-02	1.89E-02																	
Fluoranthene	1.78E-08	5.54E-09	1.23E-08																												
Fluorene	3.56E-08	1.11E-08	2.45E-08																												
Formaldehyde										5.50E-02	5.50E-02																				
Heptachlorodibenzo-p-dioxin																															
Hexachlorodibenzofuran																															
Hexane										5.50E-01	5.50E-01		1.88E-01	1.88E-01																	
Hydrogen chloride	7.48E-01	2.33E-01	5.15E-01																												
Hydrogen cyanide****																															
Indeno(1,2,3-c,d)pyrene	3.03E-10	9.42E-11	2.08E-10																												
Manganese																															
Mercury																															
Methanol																															
Methyl isobutyl ketone																															
Methyl tertiary-butyl ether										1.65E-01	1.65E-01		5.14E-03	5.14E-03																	
Methylene chloride																															
Naphthalene	6.23E-06	1.94E-06	4.29E-06										2.77E-03	2.77E-03																	
Nickel																															
Pentachlorodibenzofurans																															
Phenanthrene	1.09E-07	3.38E-08	7.48E-08																												
Phenol													0.00E+00	0.00E+00																	
Pyrene	2.67E-09	8.32E-10	1.84E-09																												
Selenium																															
Styrene													3.62E-02	3.62E-02																	
Toluene	1.57E-03	3.88E-04	1.18E-03							3.85E-01	3.85E-01		6.11E-02	6.11E-02																	
Trichlorofluoromethane																															
Vanadium																															
Xylenes (total)	1.25E-03	3.88E-04	8.58E-04							3.30E-01	3.30E-01		7.36E-02	7.36E-02																	
Zinc																															

Modeled Results

1 hr. max =	**1.53E+00**	**ug/m3**	**Total MICR**	**4.57E-06**	**Total Hazard Index**	**7.95E-02**
8 hr. max =	**5.60E+00**	**ug/m3**	**Compliant**	**YES**	**Compliant**	**YES**

HAP Name	Total (STPY)	Wt % (HAPs)	1-Hr Guideline Concentration (mg/m3)	8-Hr Guideline Concentration (mg/m3)	APP B Unit Risk Factor (m3/µg)	Model Results based on % HAP 1-hr max (mg/m3)	Model Results based on % HAP 8-hr max (mg/m3)	Maxium Individual Carcinogenic Risk (MICR)	Hazard Index Value 1-hr	Hazard Index Value 8-hr	Highest Haz Index	1-Hr Guideline Concentration Compliance	8-Hr Guideline Concentration Compliance
Total/ Unit (STPY)	1.40E+01	1.00E+00											
1,2,4-trimethyl benzene	2.30E-01	1.64E-02		2.46E+00		2.51E-05	9.19E-05	0.00E+00		3.74E-05	3.74E-05		YES
1,3-Butadiene	3.92E-01	2.79E-02		8.80E-02	3.00E-05	4.27E-05	1.56E-04	1.28E-06		1.78E-03	1.78E-03		YES
2,2,4-Trimethyl pentane	7.49E-01	5.33E-02		2.80E+01		8.16E-05	2.99E-04	0.00E+00		1.07E-05	1.07E-05		YES
2-Methyl naphthalene	9.23E-03	6.58E-04		5.82E-02		1.01E-06	3.68E-06	0.00E+00		6.33E-05	6.33E-05		YES
3-Methylchloranthrene	1.58E-06	1.12E-07				1.72E-10	6.30E-10	0.00E+00			0.00E+00		
7,12-Dimethylbenz(a) anthracene	1.40E-05	9.99E-07			7.10E-02	1.53E-09	5.60E-09	1.09E-07			0.00E+00		
Acenaphthene	5.50E-05	3.92E-06				6.00E-09	2.20E-08	0.00E+00			0.00E+00		
Acenaphthylene	4.11E-04	2.93E-05				4.49E-08	1.64E-07	0.00E+00			0.00E+00		
Acetaldehyde	6.39E-02	4.56E-03	9.01E-01		2.20E-06	6.97E-06	2.55E-05	1.53E-08	7.74E-06		7.74E-06	YES	
Acetone	6.55E-03	4.67E-04	3.56E+01	2.37E+01		7.14E-07	2.61E-06	0.00E+00	2.00E-08	1.10E-07	1.10E-07	YES	YES
Acrolein	1.77E-02	1.26E-03	4.59E-03			1.93E-06	7.05E-06	0.00E+00	4.20E-04		4.20E-04	YES	
Anthracene	9.01E-04	6.42E-05				9.82E-08	3.59E-07	0.00E+00			0.00E+00		
Antimony	4.74E-04	3.38E-05		1.00E-02		5.16E-08	1.89E-07	0.00E+00		1.89E-05	1.89E-05		YES
Arsenic	1.78E-04	1.27E-05		2.00E-04	4.30E-03	1.94E-08	7.11E-08	8.35E-08		3.55E-04	3.55E-04		YES
Benzene	1.00E+00	7.15E-02	1.60E-01	3.02E-02	7.80E-06	1.09E-04	4.00E-04	8.53E-07	6.84E-04	1.33E-02	1.33E-02	YES	YES
Benzo(a)anthracene	2.08E-05	1.48E-06			1.10E-04	2.27E-09	8.32E-09	2.50E-10			0.00E+00		
Benzo(a)pyrene	8.14E-05	5.80E-06			1.10E-03	8.88E-09	3.25E-08	9.77E-09			0.00E+00		
Benzo(b)fluoranthene	4.39E-05	3.13E-06			1.10E-04	4.79E-09	1.75E-08	5.26E-10			0.00E+00		
Benzo(e)pyrene	1.35E-06	9.63E-08				1.47E-10	5.39E-10	0.00E+00			0.00E+00		
Benzo(g,h,i)perylene	1.90E-05	1.36E-06				2.08E-09	7.60E-09	0.00E+00			0.00E+00		
Benzo(k)fluoranthene	2.43E-05	1.73E-06			1.10E-04	2.65E-09	9.70E-09	2.92E-10			0.00E+00		
Beryllium	1.15E-04	8.18E-06		1.00E-06	2.40E-03	1.25E-08	4.58E-08	3.00E-08		4.58E-02	4.58E-02		YES
Biphenyl	4.05E-02	2.88E-03		2.50E-02		4.41E-06	1.61E-05	0.00E+00		6.46E-04	6.46E-04		YES
Bromomethane	5.73E-03	4.08E-04				6.25E-07	2.29E-06	0.00E+00			0.00E+00		
Cadmium	9.68E-04	6.90E-05		2.00E-04	1.80E-03	1.06E-07	3.86E-07	1.90E-07		1.93E-03	1.93E-03		YES
Carbon disulfide	1.51E-03	1.08E-04		6.20E-02		1.65E-07	6.04E-07	0.00E+00		9.74E-06	9.74E-06		YES
Chlorine	4.10E-02	2.92E-03	5.80E-02	2.90E-02		4.47E-06	1.63E-05	0.00E+00	7.70E-05	5.64E-04	5.64E-04	YES	YES
Chromium (hexavalent)	2.45E-04	1.75E-05		1.00E-03	1.20E-02	2.68E-08	9.79E-08	3.21E-07		9.79E-05	9.79E-05		YES
Chromium (total)	1.30E-03	9.23E-05		1.00E-02		1.41E-07	5.17E-07	0.00E+00		5.17E-05	5.17E-05		YES
Chrysene	5.73E-04	4.08E-05			1.10E-05	6.25E-08	2.29E-07	6.87E-10			0.00E+00		
Cobalt	8.62E-05	6.14E-06		4.00E-04		9.40E-09	3.44E-08	0.00E+00		8.60E-05	8.60E-05		YES
Cresol	3.38E-02	2.41E-03		4.00E-01		3.68E-06	1.35E-05	0.00E+00		3.37E-05	3.37E-05		YES
Cumene	6.91E-02	4.93E-03		4.92E+00		7.54E-06	2.76E-05	0.00E+00		5.61E-06	5.61E-06		YES
Dibenz(a,h)anthracene	1.58E-05	1.12E-06			1.20E-03	1.72E-09	6.29E-09	2.06E-09			0.00E+00		
Dichlorobenzene	1.05E-03	7.50E-05	6.01E+00	3.01E+00	1.10E-05	1.15E-07	4.20E-07	1.26E-09	1.91E-08	1.40E-07	1.40E-07	YES	YES
Ethylbenzene	2.90E-01	2.07E-02	1.09E+01	8.68E+00	2.50E-06	3.16E-05	1.16E-04	7.90E-08	2.91E-06	1.33E-05	1.33E-05	YES	YES
Fluoranthene	2.90E-04	2.07E-05				3.16E-08	1.16E-07	0.00E+00			0.00E+00		
Fluorene	1.16E-03	8.27E-05	6.22E-02	3.11E-02		1.26E-07	4.63E-07	0.00E+00	2.03E-06	1.49E-05	1.49E-05	YES	YES
Formaldehyde	7.75E-01	5.52E-02	7.37E-03		1.30E-05	8.45E-05	3.09E-04	1.10E-06	1.15E-02		1.15E-02	YES	
Heptachlorodibenzo-p-dioxin	2.29E-09	1.63E-10			1.30E+00	2.50E-13	9.14E-13	3.25E-10			0.00E+00		
Hexachlorodibenzofuran	2.58E-09	1.84E-10				2.81E-13	1.03E-12	0.00E+00			0.00E+00		
Hexane	4.27E+00	3.04E-01	7.05E+01	3.52E+01		4.65E-04	1.70E-03	0.00E+00	6.60E-06	4.83E-05	4.83E-05	YES	YES
Hydrogen chloride	8.38E-01	5.97E-02	5.97E-02			9.14E-05	3.34E-04	0.00E+00	1.53E-03		1.53E-03	YES	
Hydrogen cyanide****	8.03E-03	5.73E-04		1.04E-01		8.76E-07	3.21E-06	0.00E+00		3.08E-05	3.08E-05		YES
Indeno(1,2,3-c,d)pyrene	7.84E-05	5.59E-06			1.10E-04	8.55E-09	3.13E-08	9.40E-10			0.00E+00		
Manganese	3.60E-04	2.57E-05		4.00E-03		3.93E-08	1.44E-07	0.00E+00		3.59E-05	3.59E-05		YES
Mercury	2.24E-04	1.60E-05		5.00E-04		2.44E-08	8.94E-08	0.00E+00		1.79E-04	1.79E-04		YES
Methanol	9.92E-03	7.07E-04	6.55E+00	5.24E+00		1.08E-06	3.96E-06	0.00E+00	1.65E-07	7.55E-07	7.55E-07	YES	YES
Methyl isobutyl ketone	8.35E-01	5.95E-02	6.15E+00	1.64E+00		9.11E-05	3.33E-04	0.00E+00	1.48E-05	2.03E-04	2.03E-04	YES	YES
Methyl tertiary-butyl ether	9.17E-01	6.53E-02		3.61E+00	2.60E-07	1.00E-04	3.66E-04	2.60E-08		1.01E-04	1.01E-04		YES
Methylene chloride	1.80E-02	1.28E-03		3.47E+00	4.70E-07	1.96E-06	7.18E-06	9.23E-10		2.07E-06	2.07E-06		YES
Naphthalene	1.09E-01	7.80E-03	1.57E+00	1.05E+00	3.40E-05	1.19E-05	4.37E-05	4.06E-07	7.59E-06	4.17E-05	4.17E-05	YES	YES
Nickel	2.12E-03	1.51E-04		3.00E-02	2.40E-04	2.31E-07	8.44E-07	5.54E-08		2.81E-05	2.81E-05		YES
Pentachlorodibenzofurans	1.31E-09	9.33E-11				1.43E-13	5.23E-13	0.00E+00			0.00E+00		
Phenanthrene	4.97E-03	3.54E-04				5.42E-07	1.98E-06	0.00E+00			0.00E+00		
Phenol	3.27E-02	2.33E-03		3.85E-01		3.57E-06	1.31E-05	0.00E+00		3.39E-05	3.39E-05		YES
Pyrene	1.07E-03	7.60E-05				1.16E-07	4.25E-07	0.00E+00			0.00E+00		
Selenium	7.78E-04	5.55E-05		4.00E-03		8.48E-08	3.11E-07	0.00E+00		7.76E-05	7.76E-05		YES
Styrene	1.95E-01	1.39E-02	3.41E+00	1.70E+00		2.13E-05	7.79E-05	0.00E+00	6.24E-06	4.57E-05	4.57E-05	YES	YES
Toluene	1.56E+00	1.11E-01		1.51E+00		1.70E-04	6.23E-04	0.00E+00		4.13E-04	4.13E-04		YES
Trichlorofluoromethane	6.55E-03	4.67E-04	1.12E+02			7.14E-07	2.61E-06	0.00E+00	6.35E-09		6.35E-09	YES	
Vanadium	3.63E-04	2.59E-05				3.96E-08	1.45E-07	0.00E+00			0.00E+00		
Xylenes (total)	1.49E+00	1.06E-01	1.30E+01	8.68E+00		1.62E-04	5.94E-04	0.00E+00	1.25E-05	6.84E-05	6.84E-05	YES	YES
Zinc	2.03E-04	1.45E-05				2.22E-08	8.12E-08	0.00E+00			0.00E+00		

Exhibit E: Process Block Diagrams

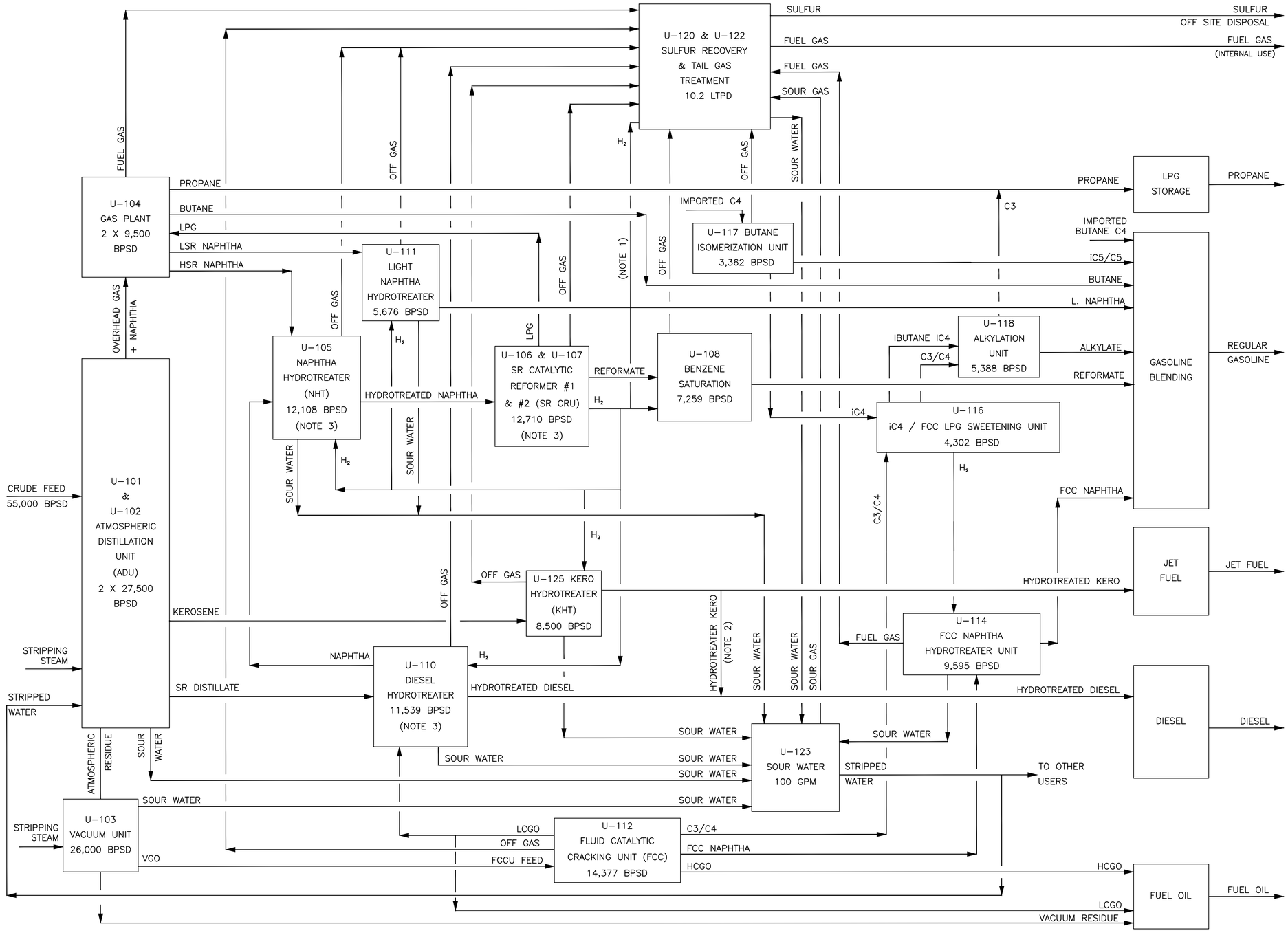

NOTES:

1. H_2 RICH GAS FROM SR CATALYTIC REFORMER IS DIRECTLY SENT TO NAPHTHA HYDROTREATER, DIESEL HYDROTREATER, AND BENZENE SATURATION UNIT. BALANCE GAS IS SENT TO FUEL GAS SYSTEM.
2. TO ACHIEVE WINTER GRADE ULSD SPECIFICATION, PARTIAL OR TOTAL KEROSENE STREAM MUST BE BLENDED INTO DIESEL, VIA KERO HYDROTREATER UNIT.
3. UNIT CAPACITIES ARE BASED ON THE NAME PLATE CAPACITY AND BAKKEN CRUDE ASSAY.
4. DURING PHASE 1, U-109 KEROSENE SWEETENING UNIT WILL BE INSTALLED WITH A CAPACITY OF 3,920 BPSD. FOR PHASE 2 IT WILL BE REPURPOSED TO U-116 FCC LPG SWEETENING UNIT.
5. BLOCK FLOW DIAGRAM FOR PERMITING PURPOSE ONLY.

Meridian Energy Group Inc.

vepica

MERIDIAN DAVIS REFINERY
PERMITS SUPPORT

BLOCK FLOW DIAGRAM
DAVIS REFINERY

REFERENCE DRAWINGS

REFERENCE DRAWING. No.	DESCRIPTION	REV.

REVISION

No.	DATE	DESCRIPTION	BY	CHK	APP.
0	08/24/16	ISSUED FOR PERMIT TO CONSTRUCT	J. F.	M. M.	C. G.

REVISION

No.	DATE	DESCRIPTION	BY	CHK	APP.

ENGINEER'S RECORD

	NAME	DATE
DRAWN	M. JOVER	06/27/16
DESIGNED	J. FLORES	06/24/16
CHECKED	M. MOSSUTO	08/19/16
VEPICA APP.	C. GARCIA	08/24/16
CLIENT APP.	T. JOHNSON	
FILE NAME:	P-5715043-01-000-16103-D001_0.dwg	

DESIGN INFORMATION CONTAINED HEREIN IS PROPRIETARY, CONFIDENTIAL, AND THE EXCLUSIVE PROPERTY OF VEPICA. IT SHALL BE USED ONLY FOR THE ORIGINAL PURPOSE INTENDED. NO PORTION OF ANY DESIGN INFORMATION CONTAINED HEREIN MAY BE USED BY, OR DISCLOSED TO UNAUTHORIZED PERSONS WITHOUT THE WRITTEN CONSENT OF VEPICA.

VEPICA PROJECT No.	VEPICA DRAWING No.				
P-5715043-01	P-5715043-01-000-16103-D001				
CLIENT PROJECT No.	SCALE	CLIENT DRAWING No.	SHEET:	OF:	REV:
TBD	NONE	TBD	1	1	0

D 34" x 22"

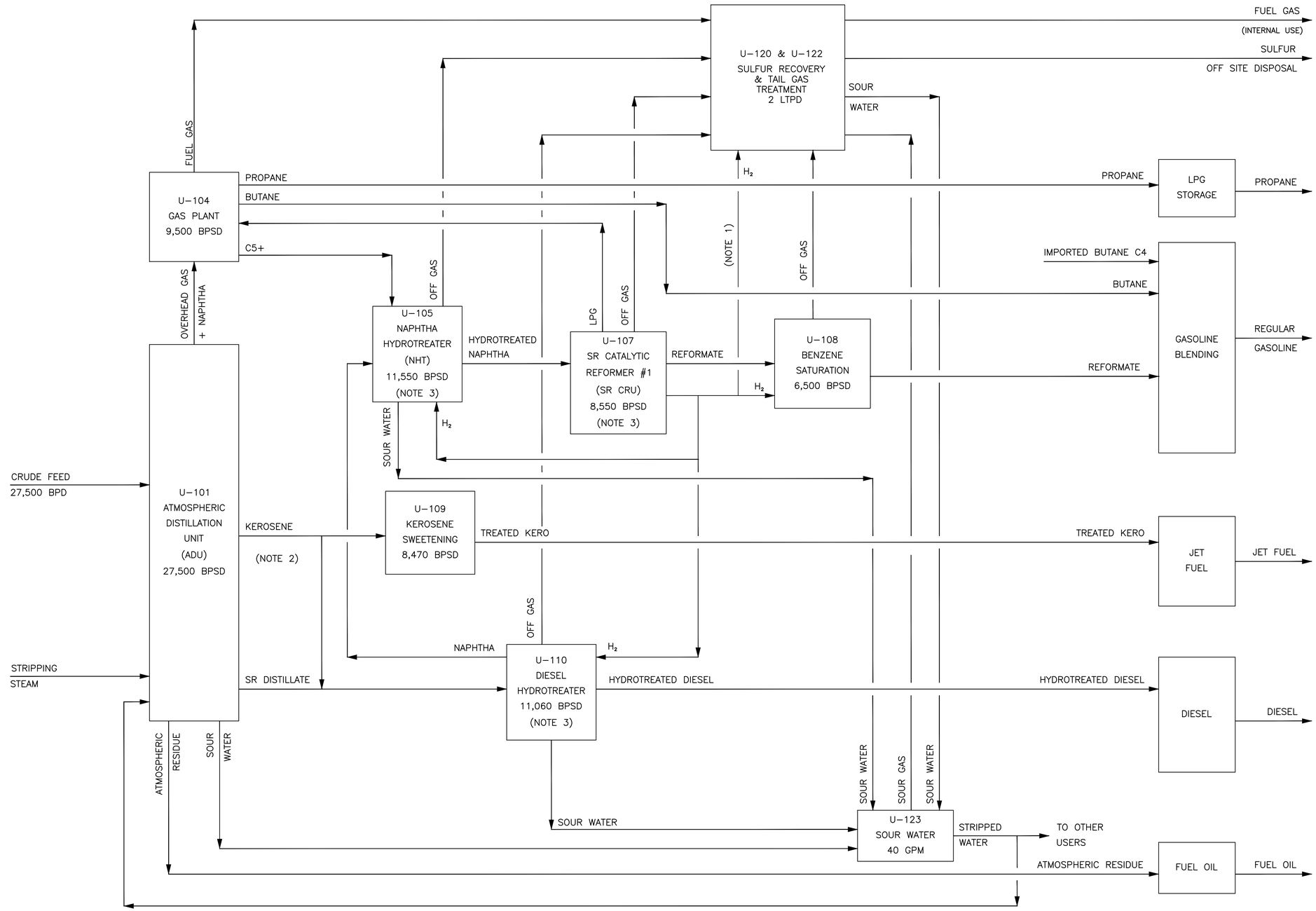

NOTES:

1. H_2 RICH GAS FROM SR CATALYTIC REFORMER IS DIRECTLY SENT TO NAPHTHA HYDROTREATER, DIESEL HYDROTREATER, AND BENZENE SATURATION UNIT. BALANCE GAS IS SENT TO FUEL GAS SYSTEM.
2. TO ACHIEVE WINTER GRADE ULSD SPECIFICATION, PARTIAL OR TOTAL KEROSENE STREAM MUST BE BLENDED INTO DIESEL, VIA DIESEL HYDROTREATER UNIT.
3. UNIT CAPACITIES ARE BASED ON THE NAME PLATE CAPACITY AND BAKKEN CRUDE ASSAY.

Meridian Energy Group Inc.

vepica

MERIDIAN DAVIS REFINERY
ENGINEERING DEFINITION AND DEFINITIVE ESTIMATE (EDDE)

BLOCK FLOW DIAGRAM
DAVIS REFINERY PHASE 1

REFERENCE DRAWINGS

REFERENCE DRAWING. No.	DESCRIPTION	REV.

REVISION

No.	DATE	DESCRIPTION	BY	CHK	APP.
0	09/22/16	ISSUED FOR PERMIT TO CONSTRUCT	J. F.	M. M.	R. L.

REVISION

No.	DATE	DESCRIPTION	BY	CHK	APP.

ENGINEER'S RECORD

	NAME	DATE
DRAWN	M. JOVER	06/27/16
DESIGNED	J. FLORES	06/24/16
CHECKED	M. MOSSUTO	06/28/16
VEPICA APP.	R. LEAL	06/28/16
CLIENT APP.	T. JHONSON	
FILE NAME:	P-5715043-01-000-16103-D002.dwg	

DESIGN INFORMATION CONTAINED HEREIN IS PROPRIETARY AND CONFIDENTIAL, AND THE EXCLUSIVE PROPERTY OF VEPICA. IT SHALL BE USED ONLY FOR THE ORIGINAL PURPOSE INTENDED. NO PORTION OF ANY DESIGN INFORMATION CONTAINED HEREIN MAY BE USED BY, OR DISCLOSED TO UNAUTHORIZED PERSONS WITHOUT THE WRITTEN CONSENT OF VEPICA.

VEPICA PROJECT No.	VEPICA DRAWING No.				
P-5715043-01	P-5715043-01-000-16103-D002				
CLIENT PROJECT No.	SCALE	CLIENT DRAWING No.	SHEET:	OF:	REV:
TBD	NONE	TBD	1	1	0

D 34" x 22"

Exhibit F: Site Plan

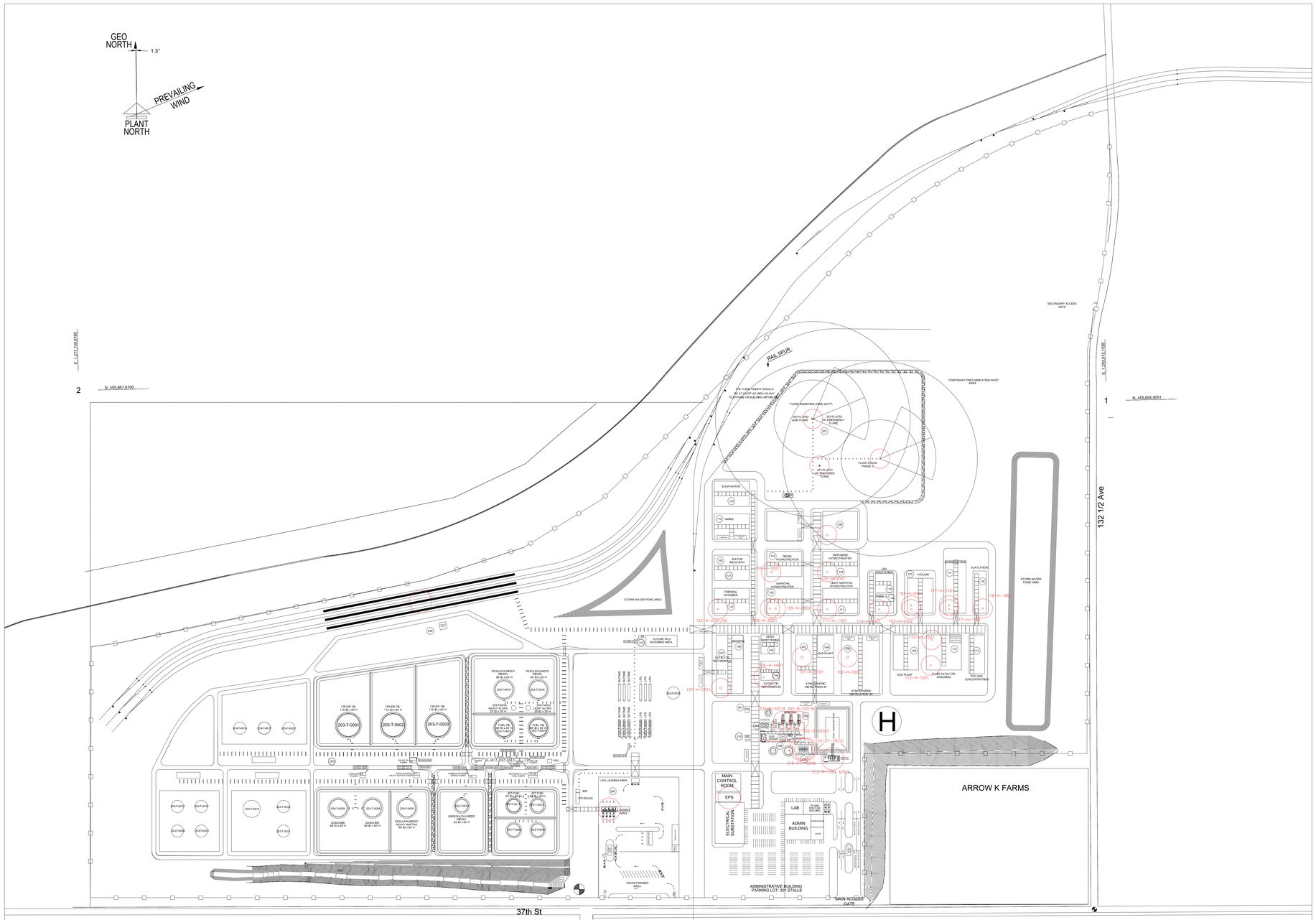

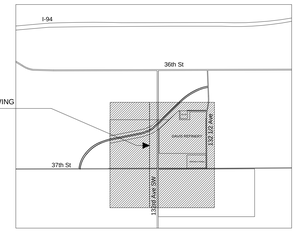

VICINITY MAP

BILLINGS COUNTY, ND

EMISSION SOURCES ISBL					
UNIT No	UNIT DESCRIPTION	TAG	EQUIPMENT DESCRIPTION	COORDINATES - UTM	
				N	E
101	ATMOSPHERIC DISTILLATION UNIT #1	101-H-0101	ADU #1 HEATER	5,193,290.7200	633,486.0500
102	ATMOSPHERIC DISTILLATION UNIT #2	102-H-0201	ADU #2 HEATER	5,193,293.2900	633,557.5100
103	VACUUM DISTILLATION UNIT	103-H-0301	VDU HEATER #1	5,193,377.6900	633,653.9400
		103-H-0302	VDU HEATER #2	5,193,371.6400	633,654.4600
104	GAS PLANT	-	-	-	-
105	HEAVY NAPHTHA HYDROTREATER	105-H-0501	HNHT HEATER #1	5,193,365.1100	633,433.3200
		105-H-0502	HNHT HEATER #2	5,193,365.4700	633,442.4700
106	CATALYTIC REFORMER UNIT #2	106-H-0601	CRU #2 HEATER	5,193,257.5000	633,427.2400
107	CATALYTIC REFORMER UNIT # 1	107-H-0701	CRU #1 HEATER	5,193,238.2600	633,361.0500
108	BENZENE SATURATION UNIT	-	-	-	-
109	KEROSENE SWEETENING	-	-	-	-
110	DIESEL HYDROTREATER	110-H-1001	DIESEL HDT HEATER	5,193,422.2700	633,433.4500
111	LIGHT NAPHTHA HYDROTREATER	105-H-0501	LNHT HEATER	5,193,367.4000	633,522.8500
112	FLUID CATALYTIC CRACKING (FCC) UNIT	112-H-1201	FCCU HEATER	5,193,285.0300	633,687.8900
		112-VS-1201	GENERATOR VENT STACK	5,193,325.0500	633,687.7600
113	FFC GAS CONCENTRATION	-	-	-	-
114	FCC NAPHTHA HYDROTREATER	114-H-1401	FCC NAPTHA HYDROTREATER HEATER	5,193,369.6100	633,604.0000
115	FCC NAPHTHA SWEETENING	-	-	-	-
116	LPG SWEETENING UNIT	-	-	-	-
117	ISOMERIZATION UNIT	117-H-1701	ISOMERIZATION HEATER #1	5,193,379.7800	633,713.2700
		117-H-1702	ISOMERIZATION HEATER #2	5,193,373.7000	633,713.6900
118	ALKYLATION UNIT	118-H-1801	ALKYLATION HEATER	5,193,376.7600	633,766.1900
119	AMINE UNIT	-	-	-	-
120	SULFUR RECOVERY UNIT # 1	-	-	-	-
121	SULFUR RECOVERY UNIT #2	-	-	-	-
122	SRU THERMAL OXIDIZER	122-H- 2201	THERMAL OXIDIZER	5,193,361.4000	633,351.7900
		122-H-2202	THERMAL OXIDIZER	-	-
123	SOUR WATER UNIT	-	-	-	-
125	KEROSENE HYDROTREATER	125-H-2501	KEROSENE HDT HEATER	5,193,425.2500	633,520.8900

EMISSION SOURCES OSBL					
UNIT No	UNIT DESCRIPTION	TAG	EQUIPMENT DESCRIPTION	COORDINATES - UTM	
				N	E
201	FUEL GAS SYSTEM	-	-	-	-
202	STEAM/BFW/CONDESATE	202-B-0201A	BOILER #1	5,193,191.440	633,459.970
		202-B-0201B	BOILER #2	5,193,191.860	633,472.150
		202-B-0201C	BOILER #3	5,193,192.280	633,484.340
203	STORAGE	203-T-0001	CRUDE OIL TANK #1	5,193,160.170	632,780.840
		203-T-0002	CRUDE OIL TANK #2	5,193,162.600	632,850.490
		203-T-0003	CRUDE OIL TANK #3	5,193,165.020	632,920.550
		203-T-0005	DESULFURIZED HEAVY NAPHTHA TANK	5,193,030.030	632,769.270
		203-T-0006	REFORMATE TANK #1	5,193,004.960	633,044.800
		203-T-0007	REFORMATE TANK #2	5,193,006.260	633,082.260
		203-T-0008	GASOLINE TANK #1	5,193,031.880	632,822.870
		203-T-0009	GASOLINE TANK #2	5,193,033.740	632,876.480
		203-T-0010	MID GASOLINE TANK #1	5,193,024.030	632,633.940
		203-T-0011	JET FUEL TANK #1	5,193,043.340	633,043.470
		203-T-0012	JET FUEL TANK #2	5,193,044.630	633,080.930
		203-T-0013	UNDESULPHURIZED DIESEL TANK #1	5,193,033.700	632,969.460
		203-T-0014	UNDESULPHURIZED DIESEL TANK #2	5,193,149.510	632,610.910
		203-T-0015	DESULFURIZED DIESEL TANK #1	5,193,218.100	633,022.230
		203-T-0016	DESULFURIZED DIESEL TANK #2	5,193,219.950	633,075.840
		203-T-0017	LVGO TANK	5,193,150.840	632,649.290
		203-T-0018	FCC NAPHTHA TANK #1	5,193,023.750	632,517.660
		203-T-0019	FCC NAPHTHA TANK #2	5,193,025.040	632,555.130
		203-T-0020	ALKYLATE TANK #1	5,192,985.370	632,518.990
		203-T-0021	ALKYLATE TANK #2	5,192,986.670	632,556.460
		203-T-0022	DILUENT TANK	5,193,152.160	632,687.660
		203-T-0023	FUEL OIL TANK #1	5,193,164.490	633,024.090
		203-T-0024	FUEL OIL TANK #2	5,193,166.350	633,077.700
		203-T-0025	LPG BULLET #1	5,193,169.810	633,191.010
		203-T-0026	LPG BULLET #2	5,193,170.060	633,198.310
		203-T-0027	LPG BULLET #3	5,193,170.250	633,205.720
		203-T-0028	LPG BULLET #4	5,193,170.970	633,224.440
		203-T-0029	LPG BULLET #5	5,193,171.240	633,231.650
		203-T-0030	LPG BULLET #6	5,193,171.470	633,239.210
		203-T-0031	LIGHT NAPHTHA TANK #1	5,192,991.190	632,684.940
		203-T-0032	LIGHT NAPHTHA TANK #2	5,193,029.560	632,683.610
		203-T-0033	LIGHT SLOPS TANK	5,193,190.740	633,061.040
		203-T-0034	HEAVY SLOPS TANK	5,193,189.950	633,038.200
		203-T-0035	ETHANOL TANK	5,193,227.690	633,273.340
		203-T-0036	BUTANE BULLET #1	5,193,225.510	633,189.030
		203-T-0037	BUTANE BULLET #2	5,193,225.790	633,196.320
		203-T-0038	BUTANE BULLET #3	5,193,226.070	633,203.740
		203-T-0039	BUTANE BULLET #4	5,193,226.720	633,222.540
		203-T-0040	BUTANE BULLET #5	5,193,226.960	633,229.810
		203-T-0041	BUTANE BULLET #6	5,193,227.210	633,237.220
204	PLANT AND INSTRUMENT AIR	-	-		
205	POTABLE AND PROCESS WATER SYSTEM	-	-		
206	WASTE WATER TREATMENT PLANT	-	-	5,193,483.160	633,518.900
207	REFINERY FLARES	207-FL-1701	HC ENCLOSED FLARE	5,193,591.060	633,502.990
		207-FL-1702	ACID FLARE	5,193,663.840	633,490.080
		207-FL-1703	HC EMERGENCY FLARE	5,193,663.840	633,490.080
		207-FL-1704	FLARE	5,193,605.350	633,597.250
208	TRUCK LOADING/UNLOADING	-	-	5,193,042.980	633,192.900
209	RAIL LOADING/UNLOADING	-	-	5,193,357.420	632,886.880
210	NITROGEN SYSTEM	-	-		
211	WASTE TREATMENT	-	-		
212	FIRE PROTECTION SYSTEM	212-P-1201 A/B/C	FIREWATER DIESEL PUMP	5,193,133.810	633,539.330
213	BLENDING AREA	-	-		
214	HOT OIL	214-H-1401	-		
215	COOLING WATER	215-CT-1501A	COOLING TOWER	5,193,147.060	633,488.940
		215-CT-1501B	COOLING TOWER	5,193,147.210	633,493.180
		215-CT-1501C	COOLING TOWER	5,193,147.360	633,497.430
216	POWER DISTRIBUTION	215-EG-1601	EMERGENCY GENERATOR STACK	5,139,066.950	633,380.690

NOTES:

1. THE REFERENCE POINT INDICATED ON THIS DRAWING IS THE CENTROID OF SECTION 1 OF THE PUBLIC LAND SURVEY GRID IN TOWNSHIP ONE HUNDRED THIRTY NINE (139) NORTH OF RANGE ONE HUNDRED (100) WEST OF THE 5TH PRINCIPAL MERIDIAN, NORTH OF RANGE ONE HUNDRED (100) WEST OF THE 5TH PRINCIPAL MERIDIAN, BILLINGS COUNTY, NORTH DAKOTA. THE COORDINATES VALUES ARE IN ACCORDANCE WITH STATE MAP SYSTEM US SURVEY FT.

192 0 96 192 384 768

(IN FEET)

GRAPHIC SCALE

1 inch = 192 ft.

FOR PERMIT PURPOSES ONLY

Meridian Energy Group Inc.

vepica USA

PROCESS STUDY FOR THE 55,000 BPSD REFINERY IN BILLINGS COUNTY, ND

OVERALL PLOT PLAN
DAVIS REFINERY

REFERENCE DRAWINGS		
REFERENCE DRAWING. No.	DESCRIPTION	REV.
NA	CERTIFICATE OF SURVEY	

REFERENCE DRAWINGS		
REFERENCE DRAWING. No.	DESCRIPTION	REV.

REVISION					
No.	DATE	DESCRIPTION	BY	CHK	APP.
0	09/23/16	ISSUED FOR PTC	P.CASTRILLON	A. PENA	C. GARCIA

REVISION					
No.	DATE	DESCRIPTION	BY	CHK	APP.

ENGINEER'S RECORD		
	NAME	DATE
DRAWN	L.VIVAS	09/23/16
DESIGNED	P. CASTRILLON	09/23/16
CHECKED	A. PENA	09/23/16
VEPICA APP.	C. GARCIA	09/23/16
CLIENT APP.	T. JONHSON	

FILE NAME: P-5715043-00-001-12101-P001.dwg

THE TECHNICAL INFORMATION INCLUDED IN THIS DOCUMENT BELONGS TO COMPANY'S PROPERTY. ITS USE AND REPRODUCTION WITHOUT PREVIOUS WRITTEN AUTHORIZATION IS FORBIDDEN

VEPICA PROJECT No.	VEPICA DRAWING No.				
P-5715043	P-5715043-00-001-12101-P001				
CLIENT PROJECT No.	SCALE	CLIENT DRAWING No.	SHEET:	OF:	REV.
TBD	1/16" - 1'	TBD	1	1	0

ARCH E 48" x 36"